CKTP Solids and Liquid Hauled-Waste Treatment Upgrades

Central Kitsap Treatment Plant

Basis of Design

December 2023

This page is intentionally left blank.

Certificate of Engineer

This Basis of Design Report for the County of Kitsap has been prepared under the direction of the following Registered Professional Engineer.

12/11/2023

Jeffrey D. Zahller, PE
HDR Engineering, Inc.

This page is intentionally left blank.

Contents

Executive Summary 1
ES-1 Background and Summary of Critical Issues 1
ES-2 Facility Process Design 2
ES-3 Process Design Criteria 7
ES-3.1 Septage and FOG Receiving 7
ES-3.2 Solids Thickening (Primary Sludge and Septage) 9
ES-3.3 Anaerobic Digestion 15
ES-3.4 Miscellaneous Process Support Systems 19
ES-4 Design Support Disciplines 20
ES-5 Sequencing, Coordination, and Cost 23
1 Introduction 25
1.1 Background 25
1.2 Project Overview 27
1.3 Engineering Report Requirements 32
2 Facility Design Criteria 35
2.1 Historical Solids Loading Data 35
2.1.1 Historical PS Flows and Loads 36
2.1.2 Historical WAS Flows and Loads 37
2.1.3 Historical Septage Flows and Loads 38
2.1.4 Historical FOG Flows and Loads 40
2.1.5 Historical HTWAS Flows and Loads 41
2.2 Projected and Elected Solids Design Flows and Loads 43
2.2.1 PS Flow and Load Selection 44
2.2.2 WAS Flow and Load Selection 45
2.2.3 Septage Flow and Load Selection 46
2.2.4 FOG Flow and Load Selection 47
2.2.5 HTWAS Flow and Load Selection 48
2.3 Rheology Testing and Analysis 49
2.3.1 Rheology Testing Background 49
2.3.2 Rheology Testing Results 49
3 Septage and FOG Receiving and Treatment 53
3.1 Septage Overview 53
3.1.1 Septage Gravity Bypass 53
3.1.2 Septage Pumped Bypass 54
3.1.3 Septage Workshop Material 54
3.2 FOG Overview 54
3.2.1 FOG Workshop Material 55
3.3 Septage and FOG Flows and Loads 55
3.4 Septage and FOG Equipment Selection 56
3.4.1 Septage Equipment 56
3.4.2 Associated Septage Equipment 59
3.4.3 FOG Equipment 60
3.4.4 Associated FOG Equipment 62
3.5 Septage and FOG Facility Layout 62
3.5.1 General Layout 62

3.5.2 Septage Influent Box ... 64
3.5.3 Septage Screening, Equalization, and Pumping ... 65
3.5.4 FOG Building ... 69
3.6 Septage and FOG System Operation ... 71
3.6.1 Septage ... 72
3.6.2 FOG ... 73
3.6.3 Future FOG System Operation ... 74
3.7 Septage and FOG Pumps and Mixers ... 74
3.7.1 Septage Pumps ... 74
3.7.2 Septage Mixers ... 74
3.7.3 FOG Feed Pumps ... 75
3.7.4 FOG-Receiving Tank Mixer ... 75
4 Solids Thickening ... 77
4.1 Thickening Technology Evaluation, Selection, and Performance Testing ... 77
4.1.1 Thickening Technology Evaluation ... 77
4.1.2 Thickening Technology Selection and Performance Testing ... 78
4.1.3 FKC Performance Testing ... 78
4.2 Thickening Flows, Loads, and Operation ... 79
4.3 Thickening Equipment Characteristics and Layout ... 84
4.3.1 Thickening Equipment Characteristics ... 84
4.4 Thickened Sludge Pump Design ... 87
4.4.1 Polymer System Design Criteria ... 89
4.4.2 Polymer System Equipment Selection ... 90
5 Anaerobic Digestion ... 95
5.1 Digester Process Improvements ... 95
5.1.1 Historical Digester Flows and Loads and Digester Performance ... 95
5.1.2 Design Digester Influent Flows and Loads ... 102
5.1.3 Digester Improvement Alternatives ... 107
5.1.4 Digester Operating Modes ... 107
5.2 Digester Design ... 111
5.2.1 Digester Area Layout ... 111
5.2.2 Digester Covers ... 112
5.2.3 Digester Feed Strategy ... 116
5.2.4 Digester Mixing System ... 117
5.2.5 Digester Heat Demand ... 120
5.2.6 Heat Exchanger and Recirculation Pumps ... 124
5.2.7 Sludge Transfer Pumps ... 127
5.3 Digester Facility Layout ... 128
5.4 Biogas Handling and Treatment ... 132
6 Miscellaneous Support Systems ... 135
6.1 In-Plant Pump Station ... 135
6.2 Centrate Equalization and Storage ... 137
6.2.1 Centrate Pump Design ... 141
6.3 Odor Control ... 141
6.3.1 Site Conditions ... 142
6.3.2 Regulations ... 143
6.3.3 Design Criteria ... 143
6.4 Existing Pumps Evaluation ... 158
6.4.1 Primary Sludge Pumps (P-1001, P-1002) ... 158
6.4.2 Scum/FOG Pumps (P-1003, P-1004) ... 159

6.4.3 WAS Pumps (P-2201, P-2202) ... 159
6.4.4 Centrate Sump Pumps (Existing P-7151, P-7152) ... 160
6.4.5 TSBT Feed Pumps to Digester (P-4510, P-4520, P-4530) ... 160
7 HVAC and Boiler Systems ... 161
7.1 General Design Standards and Criteria ... 161
7.2 Boilers and Hot Water Loop ... 162
7.3 Existing Digester Complex HVAC ... 163
7.4 New Digester Complex HVAC ... 163
7.5 Digester Control Building HVAC ... 163
7.6 Thickening Building HVAC ... 163
7.7 FOG Building HVAC and Hot Water Supply ... 164
7.8 Maintenance Building ... 164
7.9 Plumbing and Drainage ... 164
8 Architectural Design ... 167
8.1.1 Building Codes (After March 15, 2024) ... 167
8.1.2 Maintenance Building ... 167
8.1.3 Process Buildings ... 168
8.1.4 Architectural Materials ... 168
9 Structural Design ... 171
9.1 General Design Standards and Criteria ... 171
9.2 Applicable Structural Codes and Design Standards ... 171
9.3 Structural Design Loads ... 171
9.3.1 Gravity Loading ... 171
9.3.2 Lateral Loading ... 172
9.3.3 Seismic Design Criteria ... 173
9.4 Structural Design Load Combinations ... 176
9.5 New Digesters ... 176
9.6 Existing Digesters and Centrate Tank ... 177
9.7 Process Buildings ... 177
9.8 In-Plant Pump Station ... 177
9.9 Maintenance Building ... 177
9.10 Parking and Storage Canopy ... 178
10 Electrical Design ... 179
10.1 System Design and Design Criteria ... 179
10.1.1 Electrical Service and Utility Coordination ... 179
10.1.2 Electrical Distribution System Overview ... 179
10.1.3 Electrical Loads ... 179
10.1.4 Standby Power ... 180
10.1.5 Uninterruptible Power Supply ... 180
10.1.6 Codes and Standards ... 180
10.1.7 Raceways and Conduits ... 181
10.1.8 Boxes, Panels, and Cabinets ... 181
10.1.9 Duct Banks and Separation ... 181
10.1.10 Wire and Cable ... 181
10.1.11 Material Application and Area Environmental Schedules ... 181
10.1.12 Variable-Frequency Drives ... 187
10.1.13 Motors and Motor Control Centers ... 187
10.1.14 Pilot Devices ... 187
10.1.15 Local Disconnects ... 187

10.1.16 Panelboards ... 187
10.1.17 Power System Analysis and Arc Flash Study Labeling ... 188
10.1.18 Grounding ... 188
10.1.19 Lighting ... 188
10.1.20 Surge Suppression ... 188
10.1.21 Seismic Criteria ... 188
10.1.22 Identification ... 188
10.1.23 Power Monitoring ... 188
10.2 Special Electrical Systems ... 188
10.2.1 Communications System ... 189
10.2.2 Fiber-Optic Network System ... 189
10.3 Equipment Sole-sourcing and Preferences ... 189
10.3.1 Switchgear ... 189
10.3.2 Switchboard ... 189
10.3.3 Motor Control Centers ... 189
10.3.4 Variable-Frequency Drives ... 189
10.3.5 Generators ... 189
10.3.6 Automatic Transfer Switches (ATS) ... 189
10.3.7 Panelboards ... 190
10.4 Maintenance Building ... 190
10.4.1 Building Interior Electrical System ... 190
10.4.2 Main Electrical Room ... 191
10.4.3 Building Critical Loads ... 191
11 Instrumentation and Control Design ... 193
11.1 General Design Standards and Criteria ... 193
11.1.1 Instrumentation ... 193
11.1.2 Control Systems ... 193
11.1.3 Networking Segmentation ... 195
11.2 Control Schemes ... 196
11.2.1 Process Control Narratives ... 196
11.2.2 Equipment Controls ... 196
11.3 New or Modified Processes ... 199
11.3.1 Existing Digesters (Digesters 1 and 2) ... 199
11.3.2 New Digesters (Digesters 3 and 4) ... 202
11.3.3 Digester Control Building ... 202
11.3.4 Sludge-Thickening Building ... 202
11.3.5 Septage and FOG Facility ... 204
11.3.6 In-Plant Pump Station ... 207
11.3.7 Centrate Storage System ... 208
12 Preliminary Civil Design ... 209
12.1 Design Components ... 209
12.1.1 Design Vehicles ... 210
12.1.2 Pavement and Surfacing ... 210
12.2 Grading ... 211
12.3 Clearing and Demolition ... 211
12.4 Erosion Control ... 211
12.5 Stormwater ... 212
12.6 Utility Piping ... 212
12.7 Site Layout ... 212
13 Permitting, Project Delivery, and Project Cost ... 213
13.1 Project Permit Matrix ... 213

13.2 Delivery Method 214
13.3 CKTP Process Upgrades Phasing 215
13.4 Maintenance Building Phasing 216
13.5 Opinion of Probable Construction Cost 216
13.5.1 Operational Costs 217
14 References 219

Tables

Table ES-1. Thickener analysis scenarios and results for PS and septage 13
Table ES-2. Thickener flow, load, operation, and other criteria for PS and septage thickening 14
Table ES-3. Design digester influent flows and loads, 2028 and 2042 projections 16
Table ES-4. Mass balance for proposed digesters per 2028 and 2042 projected flows and solid loads 18
Table 1-1. Location of relevant engineering report content per WAC 173-240-060 32
Table 2-1. Summary of selected flow and load design values 43
Table 2-2. PS current and future flows (gpd) 44
Table 2-3. PS current and future loads (lb/d) 44
Table 2-4. WAS current and future flows (gpd) 45
Table 2-5. WAS current and future loads (lb/d) 45
Table 2-6. Septage current and future flows (gpd) 46
Table 2-7. Septage current and future loads (lb/d) 46
Table 2-8. FOG current and future flows (gpd) 47
Table 2-9. FOG current and future loads (lb/d) 47
Table 2-10. HTWAS current and future flows (gpd) 48
Table 2-11. HTWAS current and future loads (lb/d) 48
Table 3-1. Lakeside Raptor Complete Septage Plant design summary 58
Table 3-2. FA1200-DM SAVI BEAST design summary 62
Table 3-3. Septage submersible pump design criteria 75
Table 3-4. Septage submersible mixer design criteria 75
Table 3-5. FOG feed pump design criteria 75
Table 3-6. FOG submersible mixer design criteria 76
Table 4-1. Performance testing results summary 78
Table 4-2. Thickener analysis scenarios and results for PS and septage 81
Table 4-3. Thickener flow, load, operation, and other criteria for PS and septage thickening 82
Table 4-4. Thickener analysis scenarios and results for WAS 83
Table 4-5. Thickener flow, load, operation, and other criteria for WAS redundancy 83
Table 4-6. FKC RST-775X3600L characteristics 84
Table 4-7. Thickened sludge pump evaluation at 50 gpm 88
Table 4-8. Thickened sludge pump preliminary design criteria 89
Table 4-9. Polymer system sizing operational parameters 89
Table 4-10. Polymer system sizing initial design criteria 90
Table 4-11. Polymer system sizing revised design criteria 91
Table 4-12. Polymer feed pump preliminary design criteria 93
Table 5-1. 2021–Q1 2023 total digester influent flows, average HRT, and flows per feed source 97
Table 5-2. 2021: total digester influent solids loading and solids loading per feed source (lb/d) 98

Table 5-3. 2021–Q1 2023 digester influent flows and solids load composition per solids source 99
Table 5-4. Design digester influent flows and loads, 2028 and 2042 projections..... 103
Table 5-5. Mass balance for proposed digesters per 2028 and 2042 projected flows and solids loads..... 109
Table 5-6. Pros and cons of digester cover alternatives..... 113
Table 5-7. Gas storage capacity from Digesters 3 and 4 116
Table 5-8. Pros and cons of digester mixing alternatives 118
Table 5-9. Digester mixing system design parameters..... 119
Table 5-10. Minimum heat input requirement 122
Table 5-11 Maximum heat input requirement 123
Table 5-12. Summary of digester sludge heating design criteria..... 126
Table 5-13. HEX and sludge recirculation pumps preliminary design criteria 127
Table 5-14. Digester transfer pump evaluation at 250 gpm..... 127
Table 5-15. Sludge transfer pump preliminary design criteria 128
Table 6-1. In-plant pump station influent flow summary 135
Table 6-2. Selected pump specifications (typical of 3) 136
Table 6-3. Centrate storage pump preliminary design criteria..... 141
Table 6-4. Foul-air collection/ventilation design criteria..... 145
Table 6-5. Odor control: preliminary design concentrations 146
Table 6-6. Typical biofilter bed sizing criteria..... 148
Table 6-7. Preliminary odor control blower design criteria and specifications..... 150
Table 6-8 Pre-wetting system spray nozzle specifications 153
Table 6-9. Damper specifications 155
Table 6-10. Grease filter specifications..... 158
Table 6-11. Summary of existing pump evaluation..... 158
Table 7-1. Outdoor design temperatures 161
Table 7-2. Indoor design temperatures..... 161
Table 7-3. NFPA 820 room classification and ventilation requirements 161
Table 9-1. Gravity loads 172
Table 9-2. Lateral loading 172
Table 9-3. Code-based seismic design parameters 174
Table 9-4. Seismic design criteria..... 174
Table 10-1. Material application schedule 182
Table 10-2. Area environmental designation and classification schedule 183
Table 11-1. Proposed PLC names and locations 193
Table 13-1. Project permit matrix..... 213

Figures

Figure ES-1-1. Process schematic for CKTP liquid hauled-waste upgrades 5
Figure ES-1-2. Septage-receiving station layout 8
Figure ES-1-3. VFA1200-DM SAVI BEAST isometric 9
Figure ES-1-4. Example RDT pre- and post-installation..... 11
Figure ES-1-5. Proposed thickener layout plan view..... 11
Figure ES-1-6. Proposed digester area layout..... 19
Figure 1-1. Process schematic for CKTP liquid hauled-waste upgrades 29

Figure 2-1. Primary sludge flows and loads 36
Figure 2-2. WAS flows and loads 37
Figure 2-3. WAS estimated percent TS 37
Figure 2-4. Septage percent TS and percent VS 38
Figure 2-5. Septage flow and load 39
Figure 2-6. Septage flows by type 39
Figure 2-7. FOG flows and loads 40
Figure 2-8. Recorded HTWAS flows and loads from satellite plants 41
Figure 2-9. Estimated HTWAS flows and loads 42
Figure 2-10. Rheological data results, shear stress versus shear rate 50
Figure 3-1. Existing septage-receiving station 54
Figure 3-2. Lakeside Raptor Complete Septage Plant (model 31CPSAG) 57
Figure 3-3. Example Lakeside Raptor Complete Septage Plant 57
Figure 3-4. Lakeside RACS control station 58
Figure 3-5. VFA1200-DM SAVI BEAST isometric 61
Figure 3-6. VFA1200-DM SAVI BEAST screen features 61
Figure 3-7. General septage and FOG facility layout 63
Figure 3-8. Septage influent box isometrics 64
Figure 3-9. Septage influent box plans 65
Figure 3-10. Septage influent box sections 65
Figure 3-11. Septage-receiving station layout 67
Figure 3-12. Septage EQ tank roof plan 67
Figure 3-13. Septage EQ tank foundation plan 68
Figure 3-14. Septage EQ tank isometric 68
Figure 3-15. FOG building first-floor plan 70
Figure 3-16. FOG building lower-floor plan 71
Figure 3-17. FOG building sections 71
Figure 4-1. Summary of RDT components 85
Figure 4-2. Example RDT pre- and post-installation 85
Figure 4-3. Proposed thickener layout plan view 86
Figure 4-4. Proposed thickener layout profile view 87
Figure 4-5. cleanwater1 Polyblend polymer feed system 92
Figure 4-6. cleanwater1 polymer feed pump skid assembly 92
Figure 5-1. 2021–Q1 2023 total digester influent flows and flows per feed source 97
Figure 5-2. 2021–Q1 2023 digester influent flows and solids load composition per solids source 98
Figure 5-3. HRT vs. VAR, 2021–Q1 2023 100
Figure 5-4. 2028 AAF digester influent flows and solids load composition per solids source 105
Figure 5-5. 2042 AAF digester influent flows and solids load composition per solids source 105
Figure 5-6. Proposed digester area layout 112
Figure 5-7. Example of gas-holding membrane cover 113
Figure 5-8. Example of gas-holding digester covers and auxiliary systems 115
Figure 5-9. Example of chopper pump intended for digester mixing system 119
Figure 5-10. Preliminary mixing piping and nozzle layout 120
Figure 5-11. Existing digester heat loss calculations supporting diagram 121
Figure 5-12. New digester heat loss calculations supporting diagram 122
Figure 5-13. Gooch thermal GTS Type 1-DO sludge spiral heat exchanger 125

Figure 5-14. HEX process flow diagram 125
Figure 5-15. Typical rotary-lobe pump (left to right: Boerger, Netzsch, Vogelsang)..... 126
Figure 5-16. Digester facility area 129
Figure 5-17. Section view of digester pair and process building 130
Figure 5-18. Existing CHP system with engine-generator and pretreatment H_2S and siloxane scrubbers 132
Figure 5-19. Existing waste gas burner with propane pilot (yellow piping in foreground) that will be updated to natural gas 133
Figure 6-1. Pump and system curve 136
Figure 6-2. IPS general layout (duplex pump example) 137
Figure 6-3. Centrate storage site piping..... 139
Figure 6-4. Centrate storage tank and flow control vault configuration 140
Figure 6-5. Equipment and piping reconfiguration for centrate storage and discharge..... 141
Figure 6-6. Off-site receptor boundary for CKTP 142
Figure 6-7. Bremerton-Spruce wind patterns..... 143
Figure 6-8. Inorganic biofilter media, Biorem Biosorbens..... 147
Figure 6-9. Bohn media biofilter, Wenatchee, Washington 147
Figure 6-10. Biofilter media and piping section..... 148
Figure 6-11. Biofilter: earthen basin with membrane liner 149
Figure 6-12. Biofilter: concrete wall with membrane liner 149
Figure 6-13. Hartzell FRP radial blower..... 151
Figure 6-14. New York Blowers FRP radial flume exhauster 151
Figure 6-15. Foul-air duct (FRP and HDPE)..... 152
Figure 6-16. Typical spray nozzles (injecting into inlet ductwork for biofilter)..... 153
Figure 6-17. McMaster Carr Supply Co., atomizing spray nozzle 154
Figure 6-18. Grainger (EXAIR) atomizing spray nozzles..... 154
Figure 6-19. Rain Bird sprinkler control system and surface irrigation nozzle..... 155
Figure 6-20. Spunstrand dampers 156
Figure 6-21. Ruskin dampers..... 156
Figure 6-22. Daniel mechanical dampers 156
Figure 6-23. Grease filter with differential pressure gauge..... 157
Figure 9-1. Risk category of buildings and other structures for flood, wind, earthquake, and ice loads..... 175

Appendices

Appendix A. Preliminary Process Workshop Summary....A-1
Appendix B. Digester and Thickening Building Workshop Summary....B-1
Appendix C. Septage and FOG Workshop Summary....C-1
Appendix D. Operation and Maintenance Building Design Summary....D-1
Appendix E. Sludge-Thickening Field Test Results....E-1
Appendix F. Process and Instrumentation Diagrams....F-1
Appendix G. Electrical One-Line Diagrams....G-1
Appendix H. Preliminary Civil Site Plan....H-1
Appendix I. Rheology Field Testing SOP and Results....I-1
Appendix J. SEPA Checklist....J-1
Appendix K. SCADA Master Plan References and Preferred Equipment....K-1
Appendix L. Project Delivery Report....L-1
Appendix M. Opinion of Probable Construction Cost (OPCC)....M-1

Abbreviations

1W	potable, tepid water
2W	non-potable water
3D	three-dimensional
3W	high-pressure plant water
3WHP	plant effluent
°F	degree(s) Fahrenheit
AA	average annual
AACE	Association for the Advancement of Cost Engineering
AAF	average annual flow
ACH	air change(s) per hour
ACI	American Concrete Institute
ADA	Americans with Disabilities Act
ADS	Advanced Drainage Systems
AISC	American Institute of Steel Construction
AISI	American Iron and Steel Institute
ANSI	American National Standards Institute
ASCE	American Society of Civil Engineers
ASHRAE	American Society for Heating, Refrigerating and Air-Conditioning Engineers
ASTM	American Society of Testing Materials
ATS	automatic transfer switch
AWG	American Wire Gauge
BNR	biological nutrient removal
BOD	basis of design
Btu	British thermal unit(s)
CELS	Central Emergency Lighting System
cfm	cubic foot/feet per minute
CHP	combined heat and power
CKTP	Central Kitsap Treatment Plant
County	Kitsap County
CST	centrate storage tank
CWA	Clean Water Act
CZM	Coastal Zone Management
d	day(s)
DAHP	Department of Archaeology and Historic Preservation
DB	Design-Build
dBA	decibel(s) (acoustic)
DBB	Design-Bid-Build
DBO	Design-Build Operate
DCD	(Kitsap County) Department of Community Development
DIG	digested sludge
DR	dimension ratio
Ecology	Washington State Department of Ecology
ECS	Environmental Composite Systems
EL	elevation
EMT	electrical metallic tubing
EPA	U.S. Environmental Protection Agency
EPDM	ethylene propylene diene terpolymer
EQ	equalization
ESA	Endangered Species Act
FEM	finite-element model
FOG	fats, oils, and grease
FP	fire protection water

fpm	foot/feet per minute
FRP	fiberglass-reinforced plastic
ft	foot/feet
ft^2	square foot/feet
ft^3	cubic foot/feet
gal	gallon(s)
GC/CM	General Contractor/Construction Manager
GDM	Geotechnical Design Memorandum
GEN	generator
gpd	gallon(s) per day
gpm	gallon(s) per minute
GT	gravity thickener
H_2S	hydrogen sulfide
HDPE	high-density polyethylene
HDR	HDR Engineering, Inc.
HEX	heat exchanger
HMI	human-machine interface
HOA	HAND/OFF/AUTO
hp	horsepower
HPA	Hydraulic Project Approval
hr	hour(s)
HRT	hydraulic retention time
HTWAS	hauled, thickened waste activated sludge
HVAC	heating, ventilation, and air conditioning
Hz	hertz
IBC	International Building Code
IC	interior communications
I&C	instrumentation and controls
ID	internal diameter
IEEE	Institute of Electrical and Electronics Engineers
IES	Illuminating Engineering Society
IFC	International Fire Code
IMC	International Mechanical Code
in.	inch(es)
I/O	input/output
IPS	in-plant pump station
ISA	International Society of Automation
IT	information technology
kV	kilovolt(s)
kVA	kilovolt-ampere(s)
kW	kilowatt(s)
kWh	kilowatt-hour(s)
lb	pound(s)
lb_f	pound(s) force
LED	light-emitting diode
LEL	lower explosive limit
LHW	liquid hauled waste
LHWS	*Liquid Hauled Waste Study*
LM	linear motion
m	meter(s)
MBH	thousand British thermal units per hour
MCC	motor control center
MCE	maximum considered earthquake
MG	million gallons
MH	maintenance hole

min	minute(s)
MLSS	mixed liquor suspended solids
mm	millimeter(s)
MM	maximum month
MMBtu	million British thermal units
MMF	maximum month flow
N/A	not applicable
NEC	National Electrical Code
NECA	National Electrical Contractors Association
NEMA	National Electrical Manufacturers Association
NEPA	National Environmental Policy Act
NETA	InterNational Electrical Testing Association
NFPA	National Fire Protection Association
NG	natural gas
NH_3	ammonia
NMFS	National Marine Fisheries Service
NOAA	National Oceanic and Atmospheric Administration
NOC	Notice of Construction
NPDES	National Pollutant Discharge Elimination System
OCR	OPEN/CLOSE/REMOTE
O&M	operations and maintenance
OPCC	opinion of probable construction cost
OSHA	Occupational Safety and Health Act
PA	public announcement
PCN	process control narrative
PDB	Progressive Design-Build
Ph	phase
P&ID	process and instrumentation diagram
PLC	programmable logic controller
ppmv	part(s) per million by volume
PRC	Project Review Committee
PS	primary sludge
PSCAA	Puget Sound Clean Air Agency
PSE	Puget Sound Energy
psf	pound(s) per square foot
psi	pound(s) per square inch
psid	pound(s) per square inch differential
psig	pound(s) per square inch gauge
PVC	polyvinyl chloride
PWD	Public Works Division
Q1	first quarter
RACS	Raptor Acceptance Control System
RDT	rotary-drum thickener
RGS	rigid galvanized steel
RIO	remote input/output
rpm	revolution(s) per minute
s	second(s)
SCADA	supervisory control and data acquisition
scfm	standard cubic foot/feet per minute
SDI	Steel Deck Institute
SDR	standard dimension ratio
SEPA	State Environmental Policy Act
S.G.	specific gravity
SJI	Steel Joist Institute
SOP	standard operating procedure

SPB	solids-processing building
SRT	solids retention time
S&W	Shannon & Wilson
SWGR	switchgear
TBD	to be determined
TDH	total dynamic head
TEFC	totally enclosed, fan-cooled
TFR	transformer
TM	technical memorandum
TMS	The Masonry Society
TPO	thermoplastic polyolefin
TPS	thickened primary sludge
TPSD	decanted thickened primary sludge
TS	total solids
TSBT	thickened sludge blending tank
TSP	twisted shielded pair
TSS	total suspended solids
TVS	total volatile solids
TWAS	thickened waste activated sludge
UL	Underwriters Laboratories, Inc.
UPS	uninterruptible power supply
USACE	United States Army Corps of Engineers
USFWS	United States Fish and Wildlife Service
UV	ultraviolet
V	volt(s)
VAC	volt(s) alternating current
VAR	vector attraction reduction
Vd	volatile solids destruction
VFD	variable-frequency drive
VS	volatile solids
VSR	volatile solids reduction
VSS	volatile suspended solids
W	watt(s)
WAC	Washington Administrative Code
WAS	waste activated sludge
WB-40	40-inch wheelbase truck
w.c.	water column
WDFW	Washington Department of Fish and Wildlife
WECI	Whitney Equipment Company, Inc.
w.g.	water gauge
WGB	waste gas burner
WSEC	Washington State Energy Code
WWTP	wastewater treatment plant
XHHW-2	cross-linked polyethylene high heat-resistant water-resistant-2
y	wye

This page is intentionally left blank.

Executive Summary

Kitsap County (County) has recently completed a facility planning effort (as part of an updated Wastewater General Sewer Plan) that includes significant recommendations for upgrades to the solids-processing portion of the Central Kitsap Treatment Plant (CKTP). CKTP currently uses two mesophilic anaerobic digesters (originally constructed in approximately 1977) to provide Class B biosolids meeting pathogen reduction (Washington Administrative Code [WAC] Section 173-308-170) and vector attraction reduction (VAR) (WAC 173-308-180) requirements as outlined for Class B biosolids per the U.S. Environmental Protection Agency (EPA) Part 503 Biosolids Rule (as implemented by the Washington State Department of Ecology [Ecology] Biosolids Permit for CKTP) (Ecology 2022).

This document serves as a basis of design (BOD) and engineering report (in compliance with WAC 173-240-060) for the improvements necessary to address the solids-processing deficiencies outlined as part of the facility planning effort, presented primarily in the *Central Kitsap WWTP Liquid Hauled Waste Study* (LHWS) technical memorandum (TM) focused on liquid hauled waste (LHW) (Murraysmith 2022). This TM is the basis for the solids flow and loading projects, which are used throughout this report and modified only where specifically noted.

ES-1 Background and Summary of Critical Issues

CKTP is a regional solids facility that processes the following types of sludge and solids through mesophilic anaerobic digestion:

- **Primary sludge (PS):** Primary solids collected through the primary clarifiers at CKTP.
- **Waste activated sludge (WAS):** Biological solids from secondary treatment that come from both CKTP and the County's smaller regional wastewater treatment plants (WWTPs): Manchester, Kingston, and Suquamish. The latter is referred to as hauled, thickened waste activated sludge (HTWAS). This waste can periodically include waste biosolids from other smaller regional facilities as allowed by CKTP staff.
- **Hauled septage:** CKTP is a regional facility for septage-hauling trucks, which can include septic tanks, portable toilets, and other raw sewage or septage wastes that are pretreated and processed through the digesters.
- **Fats, oils, and grease (FOG):** CKTP accepts grease loads from regional haulers for processing in the digesters. Currently grease loads are discharged into the primary scum pit and pumped to the digesters via that infrastructure.
- **Scum/foam:** Minor loads of primary and secondary scum are processed directly through the digesters.

CKTP has completed recent upgrades for its WAS-thickening (new building and equipment) and biosolids-dewatering systems (centrifuges), both of which have significant near-term capacity. However, the existing digestion facilities, septage- and

FOG-handling, and PS/septage sludge-thickening facilities are in poor condition, lack adequate capacity, are not compliant with current design standards, and lack redundancy. The critical needs, as partially noted in the LHWS (Murraysmith 2022) and further addressed in this report, are as follows:

- **Anaerobic digesters:** The digesters (two tanks, each 0.65 million gallons [MG]) are cast-in-place concrete with coated steel fixed covers and pumped mixing. The facility would not be code compliant with any modifications (with existing boilers in electrically classified spaces) and the equipment in many locations is at the end of its life. Exterior review of the tank structures indicates that the concrete is in relatively good condition. Coupled with the condition assessment is a need to expand the capacity of the digesters, as the current two-tank system (roughly 1.3 MG total) does not allow for a digester to be taken offline while still meeting minimum retention times for Class B solids (15 days) and does not provide the capacity for future projected loads over the next 20 years.
- **Primary sludge and septage thickening:** Currently, PS and septage are co-thickened in two gravity thickeners (GTs) prior to feeding to the digesters. These structures are in poor condition and require upgrade and replacement.
- **Septage receiving:** The existing septage-receiving station (which includes a custom-designed rock trap and screening, with odor control) experiences operational issues because of offloading of trash/debris, lacks any redundancy, can handle only one truck at a time, and does not provide any means to equalize loads or monitor their water quality (such as pH) and actual flow (metering) from the trucks.
- **FOG receiving:** There is currently no designed system specifically for offloading and screening of FOG. FOG is currently pumped, unscreened, to the digesters, via the existing primary scum wet well. No flow monitoring (metering) is provided.
- **In-plant pump station (IPS):** The existing IPS is a circular wet well with two submersible pumps that provides general service for tank overflows, thickener overflows, WAS-thickening filtrate, filter backwash, sanitation sewer, and miscellaneous drainage. Material is pumped back to the CKTP headworks. The wet well is currently heavily corroded and has difficulty in maintaining flows under certain conditions.
- **Maintenance building:** The current maintenance building is nearing the end of its useful life and is located in a portion of CKTP that is necessary for digestion and thickening expansion. Consequently, replacement of the maintenance building and expansion of the digestion and thickening facility are functionally part of the same project.

ES-2 Facility Process Design

The CKTP Hauled-Waste Upgrades project is intended to address the deficiencies noted previously and provide the necessary upgrades to allow CKTP to meet the requirements of the Ecology Biosolids Permit (Ecology 2022) and the Class B standards of its current solids-hauling operation through the planning horizon outlined in the LHWS (Murraysmith 2022) and Wastewater General Sewer Plan (year 2042 projections). This report outlines

the overall project flows and loads, the BOD for each portion of the upgrade, and the standards that will be followed for the detailed design documents.

The design elements overall will provide a system that will comply with the Ecology *Criteria for Sewage Works Design* (Ecology 2023), referred to as the "Orange Book," as it relates to solids thickening and digestion—in particular, Chapter S (Residual Solids Management), with emphasis on Section S-2.2 (Solids Stabilization) and Section S-2.4 (Storage).

The primary elements of the new design will be composed of the following process systems detailed in this report and shown graphically in Figure ES-1-1:

- **Anaerobic digesters:** The existing two digesters and the associated central process control building will be refurbished, partially replaced, and upgraded to improve operation and allow for better compliance with National Fire Protection Association (NFPA) 820. Two additional digesters will be added to CKTP, doubling the digestion volume from 1.3 MG to approximately 2.8 MG. A separate control building will be constructed to house primary electrical distribution equipment as well as new boilers to supply heat to the digesters as well as the existing solids-processing building (SPB).
- **Primary sludge and septage thickening:** A new building will be constructed to provide mechanical co-thickening of PS and septage, effectively replacing the aging GTs.
- **Septage handling:** A new septage-handling facility, including screening, grit removal, and flow equalization (EQ), will be constructed to improve operations, flow monitoring, flow control, redundancy, and septage pretreatment.
- **FOG handling:** A new FOG-handling facility (dedicated building) will allow for controlled offloading of FOG, separating it from scum-handling infrastructure, and provide a means for screening and pretreatment.
- **In-plant pump station:** A new IPS will replace the current corroded system, sized for the updated flows.
- **Centrate storage:** As part of the removal of the existing GTs, one of the two tanks will be refurbished to serve as a storage tank for CKTP centrate flows. This will allow CKTP to reuse existing tankage as a means to better control the flow of ammonia (NH_3)-heavy centrate to the secondary treatment system and improve overall biological nutrient removal (BNR).
- **Odor control:** New inorganic biofilters will be installed to address odor control needs for the septage, FOG, thickening, and centrate facilities.
- **Maintenance building:** A new maintenance building will replace the existing structure, with the current maintenance building space used for new digestion and thickening facilities.

This page is intentionally left blank.

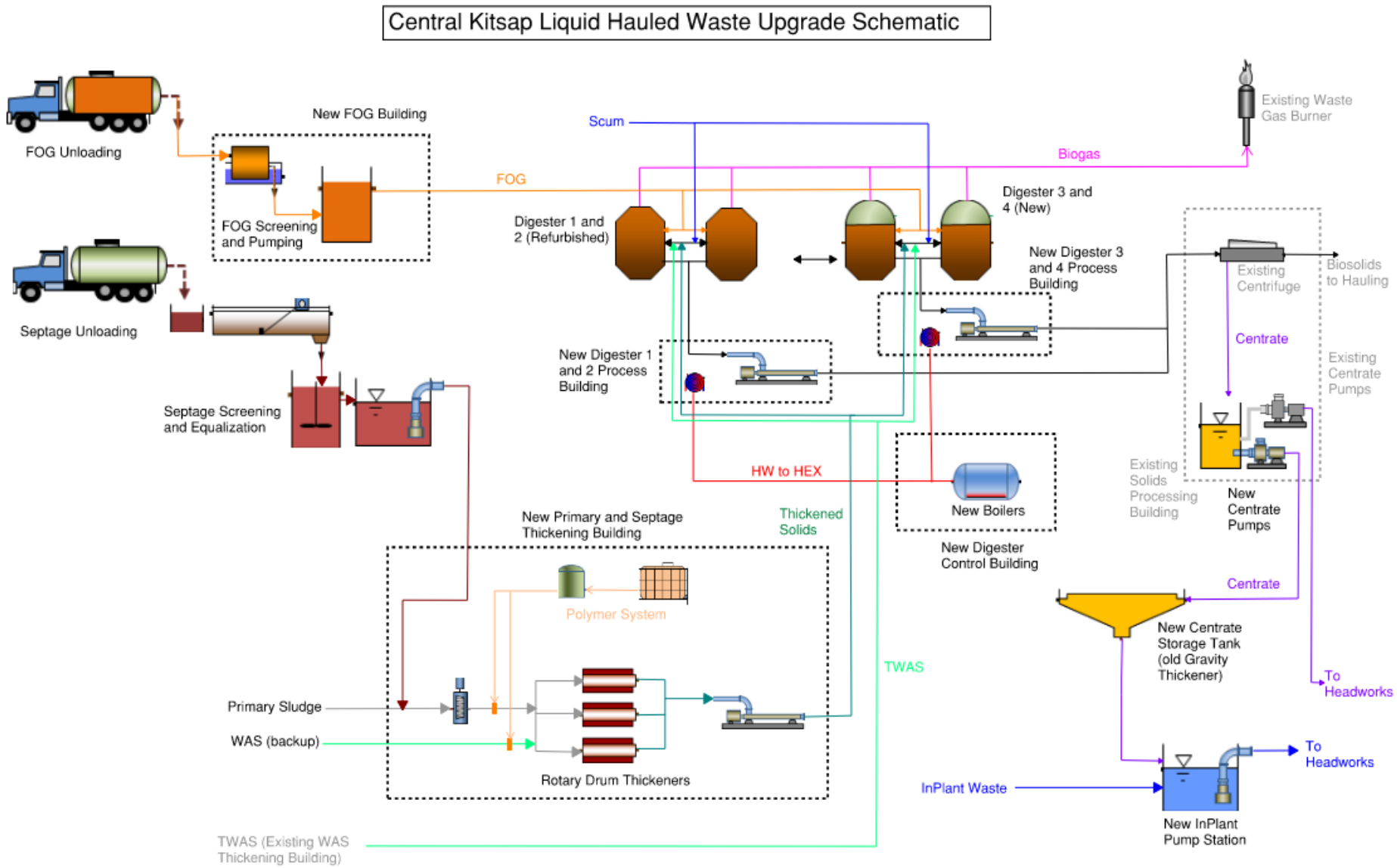

Figure ES-1-1. Process schematic for CKTP liquid hauled-waste upgrades

This page is intentionally left blank.

ES-3 Process Design Criteria

To determine solids process improvement design criteria, each solid stream's historical and projected flows and loads were evaluated by comparing facility plan projections, aforementioned recorded data, and CKTP staff information. Development of the design flows and loads is detailed in the main TM, but is summarized in Table ES-1 for each PS stream. The table presents the raw loading of the applicable streams prior to any treatment (receiving, thickening, digestion). In general, the design values assumed in this report meet or exceed the values provided in the LHWS facility planning document (Murraysmith 2022). In the case of WAS and HTWAS, the loading values are higher than those in the facility plan (to add some additional conservative safety factor). Flows, for PS and WAS as examples, may decrease over time because of an assumption of more concentrated (higher solids percentage) pumping from the clarifiers, as noted in the TM.

Table ES-1. Design flows and loads for solids streams

Stream	Parameter	Current		2028		2042	
		AA	MM	AA	MM	AA	MM
PS	Flow (gpd)	125,800	147,200	96,600	110,800	98,500	110,400
	Load (lb/d)	5,300	6,200	6,100	7,000	8,300	9,300
WAS	Flow (gpd)	152,600	200,100	121,100	156,700	156,700	201,800
	Load (lb/d)	4,500	5,900	5,100	6,600	6,600	8,500
Septage	Flow (gpd)	23,000	33,000	28,500	40,900	52,100	75,000
	Load (lb/d)	4,100	5,900	5,100	7,300	9,300	13,400
FOG	Flow (gpd)	1,800	5,300	2,400	6,500	3,500	11,200
	Load (lb/d)	300	900	400	1,100	600	1,900
HTWAS	Flow (gpd)	4,600	7,400	5,300	8,400	6,300	9,900
	Load (lb/d)	1,800	2,900	2,100	3,300	2,500	3,900

AA = average annual; MM = maximum month.

Based on the flows noted above, the following sections summarize the primary sizing criteria for each main process area. The overall facility mass balance is included schematically in Appendix F, with the individual portions of the process discussed below. The maintenance building is addressed separately as part of the architectural design criteria.

ES-3.1 Septage and FOG Receiving

Septage receiving and treatment improvements will include the following:

- Two new 6-inch-diameter truck connections
- A new septage influent box with manual bar screen
- Two new screening systems with grit removal
- Residual grease removal

- Monitoring equipment and instrumentation
- Septage EQ tanks, wet well, and submersible pumps
- Wash water at applicable points throughout the receiving and treatment process including the influent box, manual bar screen, septage-screening equipment, and EQ tanks (hot water is current not assumed for the design of septage receiving, but can be added as an extension from the FOG building if desired)

The improvements will also include two bypass configurations to allow septage receiving under emergency conditions. Flow from the EQ tanks will be pumped to the new PS and septage thickening building prior to feeding to the anaerobic digesters. The process and instrumentation diagrams (P&IDs) for the new septage system are provided on Drawings P-510 through P-513 in Appendix F. Figure ES-1-2 provides a cross section of the septage process with influent box and offloading station, through the screening/grit system, to the EQ tank. The screening equipment shown was selected as part of a workshop process with CKTP staff (Appendix C).

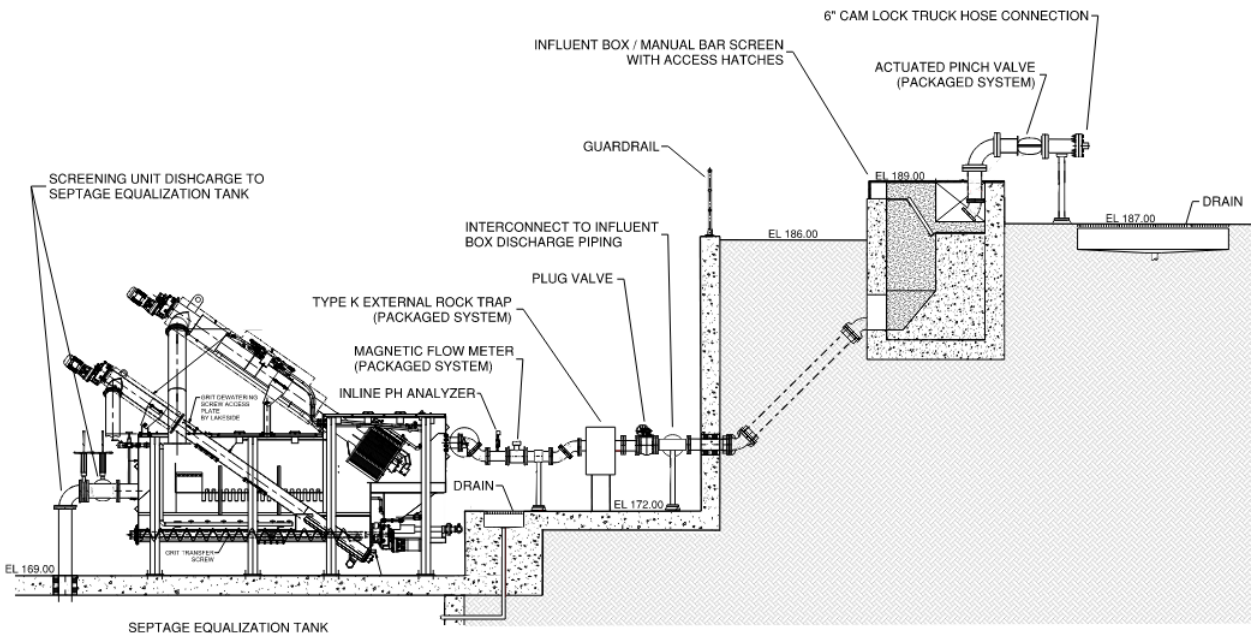

Figure ES-1-2. Septage-receiving station layout

FOG will be received through a new FOG building that will include an offloading connection for trucks, screening equipment, a receiving tank, and heat-traced piping to allow for flow to be directed to the anaerobic digesters.

Equipment used in support of the FOG receiving and treatment improvements includes the following:

- FOG offloading:
  - Control plug valve
- FOG building:
  - External rock trap

- Magnetic flow meter
- Inline pH sensor
- FOG-screening system
- FOG-receiving tank with ultrasonic level element
- FOG feed pumps
- Inline diaphragm seal with pressure element
- Associated glass-lined and heat-traced ductile-iron piping and valves
- Utility room (hot water)
- Electrical room

The P&IDs for the new FOG treatment system are provided on Drawings P-520 and P-521 in Appendix F. Figure ES-1-3 shows the primary treatment equipment that will be used for screening the FOG (the SAVI BEAST unit), selected as part of the workshop process with CKTP staff (Appendix C).

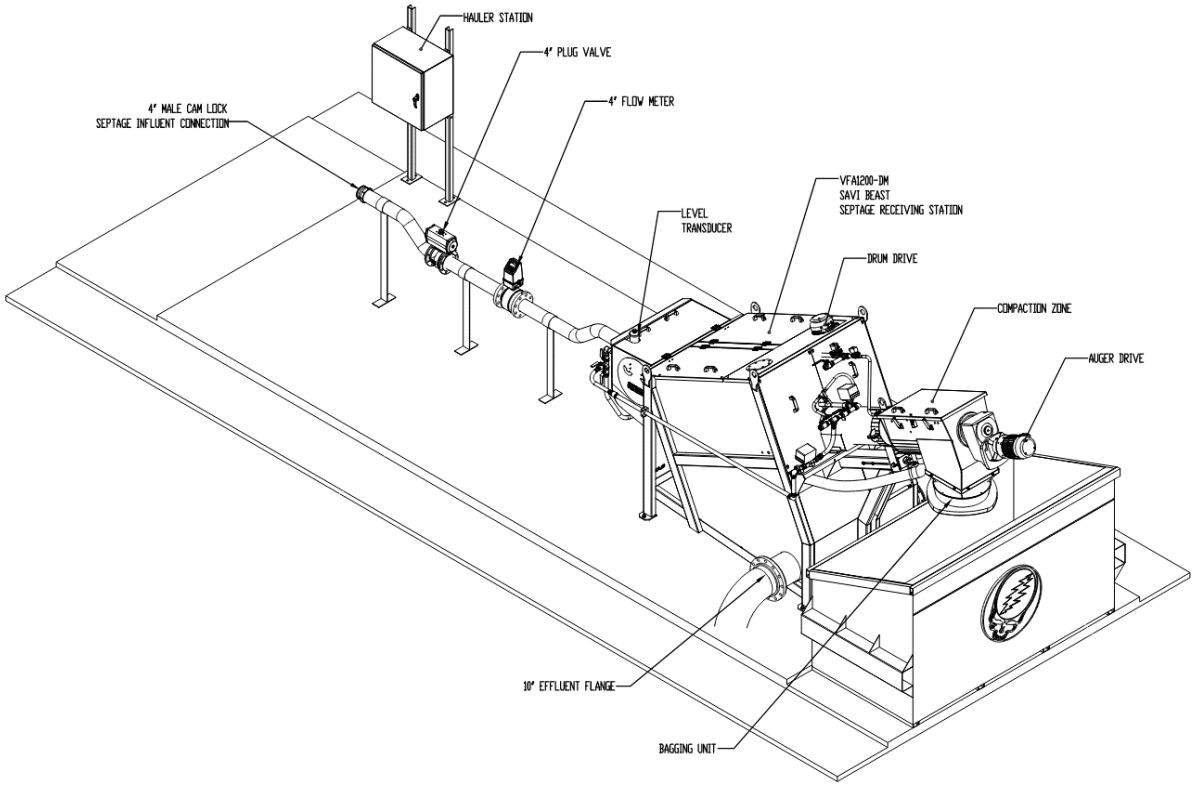

Figure ES-1-3. VFA1200-DM SAVI BEAST isometric

ES-3.2 Solids Thickening (Primary Sludge and Septage)

Solids-thickening improvements will be implemented for PS, septage, and WAS before digestion. This new thickening system will replace the existing GTs, which have reached the end of their useful life. Though there is an existing WAS rotary-drum thickener (RDT), which was recently installed and has been working well, a redundant unit was not installed as part of prior solids improvements, so CKTP staff requested that redundancy

for WAS thickening be included as part of this project. A workshop with CKTP staff (Appendix B) was conducted to confirm design flows and loads and elect a preferred thickening technology. The selection of RDTs for PS and septage was the preferred approach, which will allow the new thickening system to use similar equipment to the existing WAS RDT (a common technology approach across CKTP) and allow for the new facility to provide redundancy for the existing WAS RDT.

The new PS and septage thickening building will house the following equipment:

- Three new RDTs for thickening of PS and septage (with capability of a unit acting as redundancy backup for WAS). PS and septage will be co-thickened under most circumstances, but may be thickened separately.
- Influent flow control and solids concentration monitoring of each stream fed to the thickening equipment.
- Thickened sludge pumping from the RDTs to the anaerobic digesters.
- Polymer system with non-potable water for makedown of emulsion polymer used in the thickening process. The polymer system will be designed to be capable of feeding two different polymers at the same time in the event that both PS/septage and WAS are being thickened at the same time.
- Electrical room for power feed and monitoring/control of thickening building equipment.

The thickening building RDTs and associated equipment are shown on Drawings P-550 to P-554 in Appendix F. The polymer system is shown on Drawings P-560 through P-562.

The RDT technology consists of a set of rotating stainless-steel drum screens that allow liquids to drain freely from polymer-dosed sludge. The unit includes a flocculation tank ahead of the RDT, with a polymer injection ring on the influent piping. As flow enters the flocculation tank, it is mixed with polymer, develops a stable floc structure within the tank, then overflows in the rotary drum, where water can freely drain as the solids are slowly rotated toward the discharge. Spray bars clean the screen during operation. Filtrate is drained back to the CKTP headworks and discharged solids enter a hopper for the thickened sludge pumps that will take the material to the digesters. See Figure ES-1-4.

The selected RDT is from FKC (model RST-775X3600L). This unit is the same size (flow and throughput) as the current WAS RDT model, which allows for redundancy for WAS flows. Operation of the units should allow CKTP staff to operate either one or two RDTs for the expected PS and septage loads through the 2042 design year.

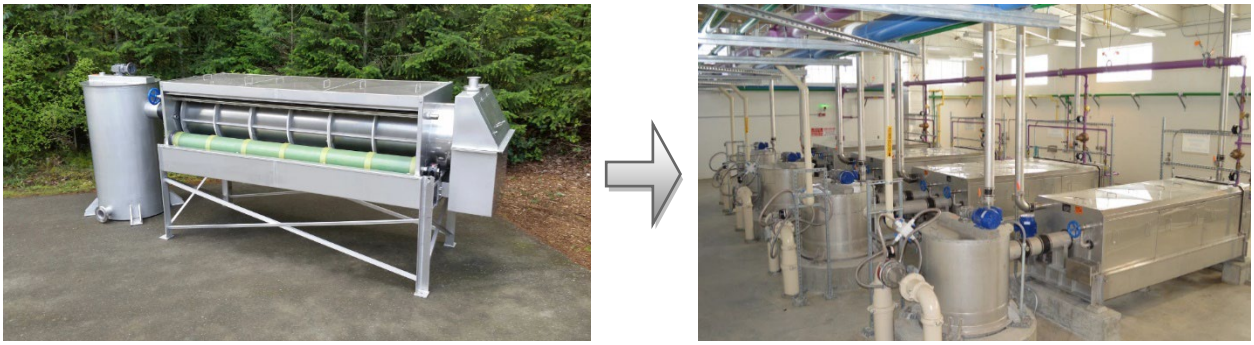

Figure ES-1-4. Example RDT pre- and post-installation

Figure ES-1-5 shows a general layout of the proposed PS and septage thickening building.

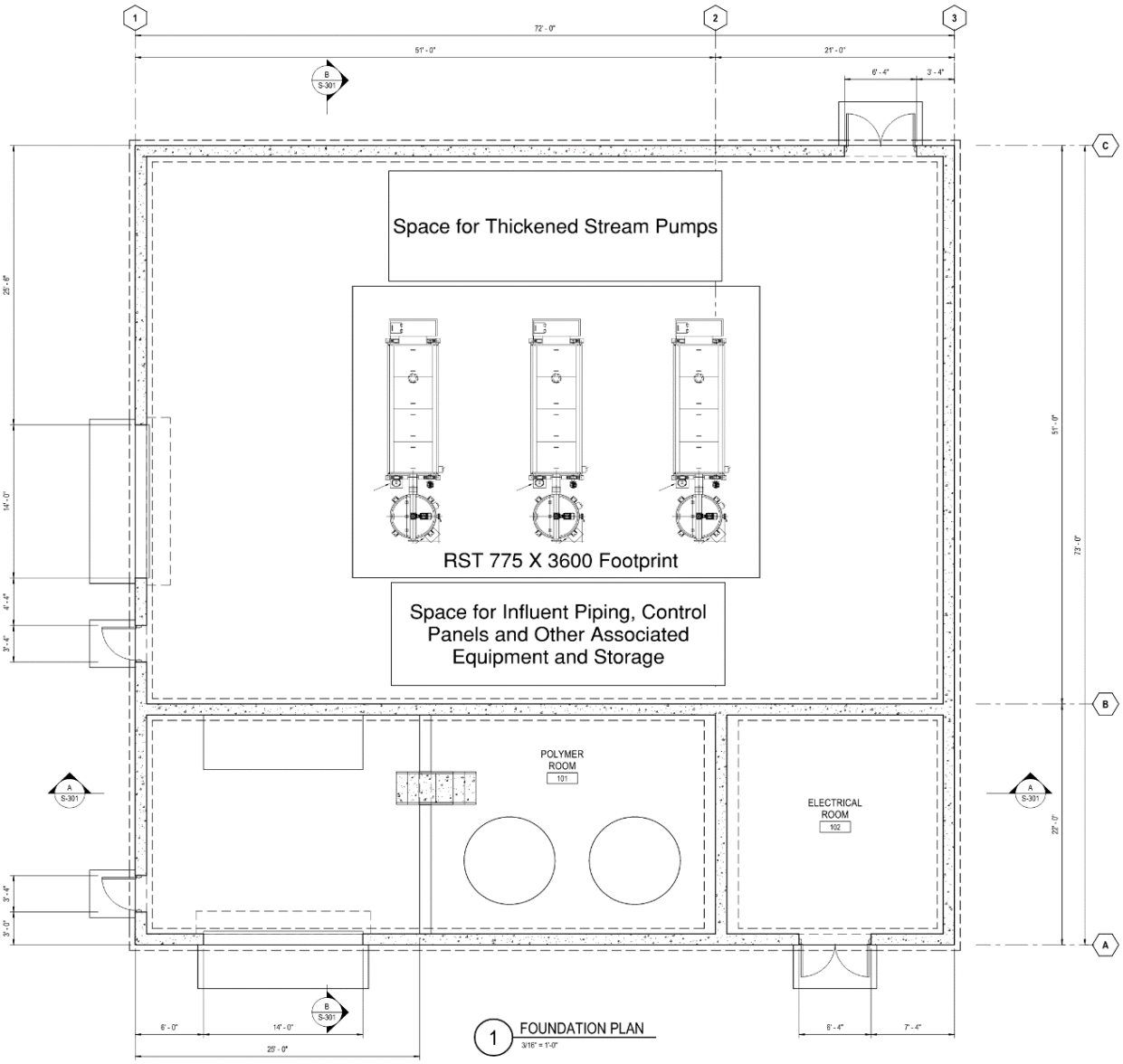

Figure ES-1-5. Proposed thickener layout plan view

Table ES-1 and Table ES-2 provide a summary of the operating scenarios for the thickeners and the estimated sizing based on number of units online, flow and concentration of the feed streams, and assumed factor of safety.

Table ES-1. Thickener analysis scenarios and results for PS and septage

Scenario	Description
Turndown	Turndown conditions evaluate thickener minimum turndown requirements against proposed flows and loads as the thickener needs a minimum flow and load to work. This scenario considers “worst-case” conditions where no septage is being processed and PS is especially thick. Opposite to other evaluated scenarios, this scenario lists maximum required operating hours needed to maintain a flow and load above minimum turndown requirements. This scenario describes operational adjustments required for a unique “lowest flow and load” situation.
2023 average	2023 average conditions evaluate thickener performance under current septage and PS flows and loads. A key part of this assumption includes the dilute nature of the PS. If primary clarifiers are operated to promote a higher PS TS, flow and required operating hours decrease significantly as shown in 2028 average conditions. The higher PS flows in turn require more time to process septage flows and loads.
2028 average	2028 average conditions evaluate thickener performance under 2028 septage and PS flows and loads. A key part of this assumption includes the thicker nature of the PS. The thicker PS allows septage to be processed quicker than in 2023 despite increased flows and loads.
2042 adjusted MM	2042 MM conditions evaluate thickener performance under 2042 MM septage and PS flows and loads. This design condition is key to ensuring that thickeners can perform at a high level for an extended period (typically 1 month). A key part of this assumption includes use of 2042 AAFs for 2042 MM septage flow and load. This approach was selected per CKTP advisement as described in previous sections. Additionally, if septage is processed 22 hours per day, 7 days per week, and PS is processed 24 hours per day, 7 days per week, one unit can process all flows and loads for this design condition.
2042 peak design	2042 peak conditions evaluate maximum thickener performance under worst-case PS flows and loads. This design condition is meant to evaluate max thickener performance and compare those conditions to observed flow and load trends. PS is assumed to be thicker, but slightly more dilute than preferred to conservatively estimate PS hydraulic flows. Septage flows and loads are then increased to the maximum amounts allowed by the thickeners to understand what peaking factors would be seen under those conditions. Peak conditions are ultimately composed of a 2042 Peak:AA solids peaking factor of 6.3 and a liquid peaking factor of 1.6 at a TS of 4.8%. As expected, and as indicated in the peaking factor values, the thickening equipment is primarily hydraulically limited. In evaluating recorded data, the maximum solids peaking factor experienced was about 3.7 with an associated liquid peaking factor of 1.5 and TS of 5.4%. The maximum liquid peaking factor experienced was about 2.9 with an associated solids peaking factor of 2.28 and TS of 1.8%. Evaluation of these recorded events would suggest that a solids peaking factor of 6.3 would not be likely but a liquid peaking factor of 1.6 with an associated TS of ~5.0% is likely for peak day conditions. Though peak conditions are generally unlikely, the proposed equipment and layout would perform well for the estimated worse-case conditions.

Table ES-2. Thickener flow, load, operation, and other criteria for PS and septage thickening

Scenario	Turndown	2023 average			2028 average			2042 adjusted MM			2042 peak design		
Stream	Primary	Septage	Primary	Combined	Septage	Primary	Combined	Septage	Primary	Combined	Septage	Primary	Combined
Year	2023	2023	2023	2023	2028	2028	2028	2042	2042	2042	2042	2042	2042
Condition	AA	AA	AA	AA	Adjusted AA	AA	Adjusted AA	Adjusted MM	MM	Adjusted MM	Peak	Peak	Peak
Flow (gpd)	31,519	23,000	125,800	148,800	28,000	96,600	124,600	52,100	110,400	162,500	143,500	110,400	253,900
Load (lb/d)	5,310	4,100	5,300	9,400	5,000	6,100	11,100	9,300	9,300	18,600	58,700	9,300	68,000
S.G.	1.01	1.02	1.01	1.02	1.02	1.01	1.02	1.02	1.01	1.02	1.02	1.01	1.02
% TS	2.00%	2.10%	0.50%	0.75%	2.10%	1.25%	1.53%	2.10%	1.25%	1.56%	2.10%	1.00%	1.45%
Dilution (water: XX)	-	2:1	-	-	2:1	-	-	2:1	-	-	2:1	-	-
Adjusted % TS	2.00%	0.70%	0.50%	0.57%	0.70%	1.25%	0.93%	0.70%	1.25%	0.90%	0.70%	1.00%	0.80%
Adjusted flow (gpd)	31,519	69,000	125,800	194,800	84,000	57,900	141,900	156,300	88,300	244,600	225,000	110,407	335,407
Selected unit	RST-775X3600L												
Number of units	1	1			1			2			2		
Rated flow (gpm)	62	250			250			375			375		
Rated solids load (lb/hr)	470	1,895			1,895			3,791			3,791		
Safety factor	75%	75%			75%			75%			75%		
Design flow (gpm)	62	188			188			375			375		
Design solids load (lb/hr)	353	1,421			1,421			5,686			5,686		
Required minimum operating hours													
5 days per week	11	24	24	-	15	24	-	17	24	-	22	24	-
7 days per week	8	13	24	-	10	24	-	11	24	-	14	24	-
Recommended operational metrics													
Hours per day	8	16	24	-	14	24	-	18	24	-	20	24	-
Days per week	7	5	7	-	5	7	-	5	7	-	5	7	-
Flow (gpm)	66	101	87	187	140	40	180	203	61	263	292	77	368
Solids load (lb/hr)	664	544			849			1,206			1,383		

ES-3.3 Anaerobic Digestion

CKTP currently has two 0.65 MG anaerobic digesters that were constructed in 1977 and have fixed steel covers that were replaced in 1992. Both digesters are typically operated continuously, and removing one digester from service significantly compromises CKTP's solids-handling operations and its ability to receive LHW, in particular, hauled septage.

Current influent flows to each digester are monitored from three sources:

- Gravity thickener (co-thickened PS and septage)
- Thickened sludge blending tank (TSBT) (includes CKTP thickened waste activated sludge [TWAS] and TWAS hauled from other Kitsap County WWTPs)
- Grease (hauled, which also accounts for negligible amounts of scum as FOG hauls are currently discharged to the primary clarifier scum pits)

The proposed digester improvements considered the 2028 and 2042 flows and loads projections retrieved from the Central Kitsap WWTP LHWS (Murraysmith 2022), as discussed in Section 2. The thickened flows and loads for septage and PS were calculated based on the predicted performance of the RDTs, planned to replace the existing GTs, assuming a thickened sludge concentration of 6 percent and solids capture of 100 percent to be conservative.

The projected digester influent flows, total solids (TS) and volatile solids (VS) loadings, and approximate TS percent per solids stream are presented in Table ES-3. These values served as design criteria for the new digester facilities. Scum from clarifiers will continue being routed to digesters, but based on current operations primary and secondary clarifier scum flows are negligible and infrequent and were not considered for projections.

Table ES-3. Design digester influent flows and loads, 2028 and 2042 projections

Scenario	Turndown	2023 average			2028 average			2042 adjusted MM			2042 peak design		
Stream	Primary	Septage	Primary	Combined	Septage	Primary	Combined	Septage	Primary	Combined	Septage	Primary	Combined
Year	2023	2023	2023	2023	2028	2028	2028	2042	2042	2042	2042	2042	2042
Condition	AA	AA	AA	AA	Adjusted AA	AA	Adjusted AA	Adjusted MM	MM	Adjusted MM	Peak	Peak	Peak
Flow (gpd)	31,519	23,000	125,800	148,800	28,000	96,600	124,600	52,100	110,400	162,500	143,500	110,400	253,900
Load (lb/d)	5,310	4,100	5,300	9,400	5,000	6,100	11,100	9,300	9,300	18,600	58,700	9,300	68,000
S.G.	1.01	1.02	1.01	1.02	1.02	1.01	1.02	1.02	1.01	1.02	1.02	1.01	1.02
% TS	2.00%	2.10%	0.50%	0.75%	2.10%	0.75%	1.05%	2.10%	1.00%	1.35%	4.81%	1.00%	3.16%
Dilution (water:XX)	-	2:1	-	-	2:1	-	-	2:1	-	-	2:1	-	-
Diluted % TS	2.00%	0.70%	0.50%	0.57%	0.70%	0.75%	0.73%	0.70%	1.00%	0.83%	1.60%	1.00%	1.49%
Diluted flow (gpd)	31,519	69,000	125,800	194,800	84,000	96,600	180,600	156,300	110,400	266,700	430,500	110,400	540,900
Selected unit	RST-775X3600L												
Number of units	1	1			1			2			2		
Rated flow (gpm)	62	250			250			375			375		
Rated load (lb/hr)	470	1,895			1,895			3,791			3,791		
Safety factor	75%	75%			75%			75%			75%		
Design flow (gpm)	62	188			188			375			375		
Design load (lb/hr)	353	1,421			1,421			2,843			2,843		
Required minimum operating hours													
5 days per week	11	24	24	-	16	24	-	13	24	-	-	-	-
7 days per week	8	13	24	-	12	24	-	9	24	-	24	24	-
Recommended operational metrics													
Hours per day	**8**	**16**	**24**	**-**	**16**	**24**	**-**	**14**	**24**	**-**	**24**	**24**	**-**
Days per week	**7**	**5**	**7**	**-**	**5**	**7**	**-**	**5**	**7**	**-**	**7**	**7**	**-**
Flow (gpm)	**66**	**101**	**87**	**187**	**140**	**40**	**188**	**203**	**61**	**263**	**299**	**77**	**375**
Load (lb/hr)	**664**	**544**			**849**			**1,206**			**2,843**		

The proposed improvements for the digester facilities use the 2042 maximum month (MM) flows and loads projections as design criteria. This will allow CKTP to accommodate nearly double the current average flow rate and solids loading, with a design, as outlined in this report, that provides improved thickening, feed controls, monitoring, and redundancy for the different solids sources.

Based on the original process control workshop (Appendix A), it was determined to expand the digestion system per the following features:

- Rehabilitate two existing 0.65 MG digesters and add two new digesters of the same volume (four digesters total) to allow for one tank out of service to still provide 75 percent of the volumetric capacity
- Allow for feeding of any solids streams to any digester
- Configure the digesters to provide for parallel (one-stage) or series (two-stage) operation

With rehabilitation, the intent is to slightly increase the active volume of the existing digesters to 0.7 MG each, and use the same volume for the new digesters. The final system would have a maximum volume capacity of 2.8 MG.

Table ES-4 summarizes the mass-balance performance estimated for the digesters using a conservative volatile solids reduction (VSR) value based on past performance of the CKTP system at similar hydraulic retention times (HRTs). In general, the system has extended HRTs of 34 to 71 days with all four tanks in operation. With one tank out of service, at worst-case future maximum month flow (MMF) conditions, the HRT is still approximately 25 days, well above the 15 days minimum requirement for Class B solids.

Table ES-4. Mass balance for proposed digesters per 2028 and 2042 projected flows and solid loads

Digester operation	Parameter	2028		2042	
		AAF	MMF	AAF	MMF
Parallel operation (normative)					
4 digesters in operation	Influent flow per digester (gpd)	9,903	14,153	14,303	20,878
	Influent solids loading per digester (lb/d)	4,700	6,325	6,825	9,250
	Influent VS per digester (lb/d)	4,005	5,395	5,815	7,895
	HRT (days)	**70.69**	**49.46**	**48.94**	**33.53**
	VS loading rate (lb/ft^3/d)	**0.043**	**0.058**	**0.062**	**0.084**
	VSR (%)	50%	50%	50%	50%
	Effluent solids loading per digester (lb/d)	2,698	3,628	3,918	5,303
	Effluent VS per digester (lb/d)	2,003	2,698	2,908	3,948
3 digesters in operation, 1 offline	Influent flow per digester (gpd)	13,203	18,870	19,070	27,837
	Influent solids loading per digester (lb/d)	6,267	8,433	9,100	12,333
	Influent VS per digester (lb/d)	5,340	7,193	7,753	10,527
	HRT (days)	**53.02**	**37.10**	**36.71**	**25.15**
	VS loading rate (lb/ft^3/d)	**0.057**	**0.077**	**0.083**	**0.112**
	VSR (%)	50%	50%	50%	50%
	Effluent solids loading per digester (lb/d)	3,597	4,837	5,223	7,070
	Effluent VS per digester (lb/d)	2,670	3,597	3,877	5,263

The rehabilitated and new digesters will be designed using the following process equipment assumptions, which were selected as part of a comparison workshop with CKTP staff (Appendix B):

- **Digester mixing system:** Pumped mixing using an internal nozzle system to distribute high-velocity flow through the digester and maintain a fully mixed tank with provisions to break down any foam accumulation.
- **Digester covers:** Two fixed steel covers and two gas-holding membrane covers, with the latter used to allow for biogas storage that can provide smoother operation of any secondary biogas uses as well as the existing waste gas burner (WGB).
- **Feed control valves:** Each solids input stream (FOG, PS/septage, WAS, and scum) will have separate flow control and automatic valve control to each of the four

digesters, allowing CKTP staff to easily rotate feeding between tanks and better control the solids balance across the system.

- **Heat exchangers (HEXs) and pumps:** Use spiral-type HEX units coupled with rotary-lobe pumps for internal digester recirculation loops, with progressive-cavity pumps for transferring flow from the digesters to the dewatering building or from one digester to another. Support boilers will be located in the new digester control building.

The digesters will be arranged on site as shown in Figure ES-1-6. Each pair of digesters will include a new central process (pumping) building that will house the pump systems, HEXs, and flow control valves.

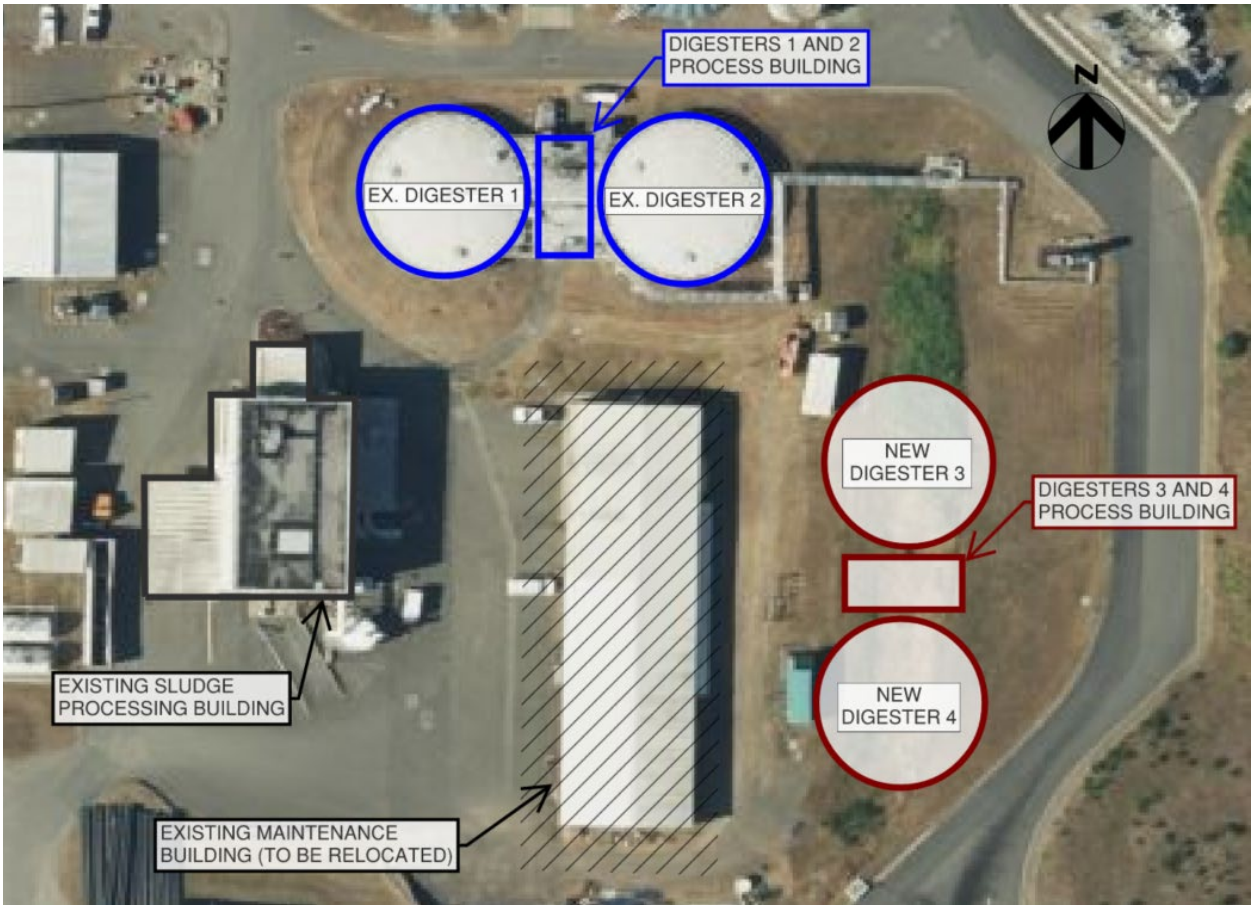

Figure ES-1-6. Proposed digester area layout

The digester P&IDs with schematic process layout (Appendix F) are shown on Drawings P-610, P-620 through P-623, P-630, and P-640 through P-644.

ES-3.4 Miscellaneous Process Support Systems

Along with the core process systems discussed in the previous sections, the following is a short summary of the additional process support systems (detail in Section 6 of this report) that are included in the design to support operation of the newly upgraded solids process equipment:

- **In-plant pump station:** A new submersible pump station to replace the existing IPS that is corroded and at the end of its useful life. The new IPS will include centrate recycle, an upsized force main from 4-inch diameter to 6-inch diameter, and two new Flygt submersible pumps (rated for 500 gallons per minute [gpm]).
- **Centrate storage tank (CST):** One of the two existing GTs will be repurposed and refurbished (concrete repair, interior coating, new cover system) to function as a holding tank for centrate produced from the CKTP centrifuge dewatering system. The tank will be capable of holding roughly 250,000 gallons (gal) of centrate to allow for a slower, more steady feeding of recirculate ammonia-nitrogen to the secondary treatment process than is currently available. Flow from the tank will be adjusted through an automated flow control valve and flow meter.
- **Odor control:** Inorganic biofilters will be provided for odor control on three of the PS systems designed as part of this project: (1) new RDTs for thickening, (2) septage and FOG receiving, and (3) the CST and IPS. The first two systems will be designed primarily for removal of hydrogen sulfide (H_2S), and the latter system for removal of NH_3 as well as H_2S. Each of the three systems will be independent, will be located near the source of the odor, and will allow for containment and treatment of residual odor from tanks and equipment.

ES-4 Design Support Disciplines

The following section provides a short summary of the design disciplines that will support the process design as indicated in the previous sections. Further details for each discipline are located in the indicated sections.

HVAC (Section 7)

Heating, ventilation, and air conditioning (HVAC) design will be provided for each of the following buildings, including air exchange rates to supplement the classification systems outlined in Section 10 and supportive of NFPA 820 compliance:

- Digester control building
- Digesters 1 and 2 process (pump) building
- Digesters 3 and 4 process (pump) building
- PS and septage thickening building
- FOG building

The new digester control building will house a new boiler and hot water pump system (natural gas [NG]–fired) that will primarily support heating of the new digesters, but will also provide heat for the existing SPB.

CKTP water utilities will be provided at each process area, including non-potable water (2W), hot water (FOG building and polymer room), and plant effluent (3WHP) for washdown.

Drainage and plumbing systems will be provided in each building, with the digester process buildings including a new sump system on the lower level to collect and pump drainage to the IPS.

Architectural (Section 8)

The architectural approach for the CKTP Hauled-Waste Upgrades facility buildings will be to provide an overall, cohesive design aesthetic that can be applied to all the new CKTP structures. To accomplish this, a coordinated palette of architectural forms, materials, textures, and colors will be used to establish a contemporary aesthetic that will be commensurate for contemporary commercial waste facilities. Although the individual buildings and structures will house different functions, the goal is that the structural and architectural design will incorporate similar construction techniques and expressions for all the new structures that will be applied consistently, regardless of size and functions. The intent is to establish a design approach that can be carried forward in future projects as CKTP continues to expand.

Appendix D includes the preliminary proposal and architectural concepts for the new maintenance building.

The process buildings (listed below) will be classified as Type IIB construction and F-1 occupancies. The exterior materials will be the same as the maintenance building. Because of their sizes and occupancy types, it is not expected that these buildings will be sprinklered.

- Digester control building
- Digesters 1 and 2 process (pump) building
- Digesters 3 and 4 process (pump) building
- PS and septage thickening building
- FOG building

Structural (Section 9)

Structural design for the project will follow the 2021 International Building Code (IBC) and use current geotechnical data that are being obtained for the project, with the summary loads as shown in Section 9.

- Structural design of new digesters will be performed according to American Concrete Institute (ACI) CODE-350.3-20 *Code Requirements for Seismic Analysis and Design of Liquid-Containing Concrete Structures (ACI 350.3-20) and Commentary*.
- Structural analysis of existing digesters and the new centrate tank (existing GT) will be performed according to ACI CODE-350.3-20 *Code Requirements for Seismic Analysis and Design of Liquid-Containing Concrete Structures (ACI 350.3-20) and Commentary*.
- Structural design of the process buildings will be performed according to IBC 2021, ACI 318-19, The Masonry Society (TMS) 402, TMS 602, American Institute of Steel Construction (AISC) 360-16, Steel Joist Institute (SJI) 100-20, and Steel Deck Institute (SDI) RD-2017.
- Structural design of the maintenance building will be performed according to IBC 2021, ACI 318-19, TMS 402, TMS 602, AISC 360-16, SJI 100-20, and SDI RD-2017.

Electrical (Section 10)

CKTP includes electrical system modifications for existing systems and facilities, including the relocation of existing electrical components and equipment. The modifications and improvements to the electrical system are described in this section.

A double-ended motor control center (MCC) will be installed at each of the following locations: PS and septage thickening building, FOG building, and digester control building. Each of these areas will have an electrical room and each MCC will be installed in the associated electrical room. The MCCs are configured such that scheduled maintenance will not result in full MCC shutdowns; each of the two MCC sections can be shut down independently of each other.

The existing service from Puget Sound Energy (PSE) for CKTP will remain in place as is. The existing service is received from PSE at 12.47 kilovolts (kV) at switchgear (SWGR) 2940, which was installed as part of the 2016 Resource Recovery project. A new PSE service will be established for the new maintenance facility and will originate from a utility pole on Brownsville Highway.

A new standby generator output will be routed through existing automatic transfer switch (ATS)-1 in the existing SWGR 2961. The new standby generator is proposed to be 600 kilowatts (kW) to match the existing generator.

Materials of construction, area classifications, and codes applicable for design are detailed in Section 10.

Instrumentation and Controls (Section 11)

The intention of the instrumentation and controls (I&C) installed in CKTP is to monitor and control treatment processes. There are various types of instrumentation (mostly installed in-pipe to monitor the process directly), while controls consist mostly of valves and motors to open/close or start/stop to allow or deny the process to proceed, as well as the electronics that process what is going on. Details and general preferences for both instrumentation and controls are detailed in Section 11.

The primary component of the control systems at CKTP will be programmable logic controllers (PLCs). The County has standardized on Rockwell Automation's CompactLogix PLCs using model 1769-L33ER processors as its main processor. The County's preference is to use solely full PLC racks, with no remote input/output (RIO) racks. See Appendix K for details on the County's control system hardware requirements. The overall preference is that each major building or process will be monitored and controlled by an individual PLC.

Process control narratives (PCNs) for each major system included in this design are outlined in detail in Section 11.

Civil Design (Section 12)

Appendix H provides preliminary site layouts (buildings and process areas with major process pipeline routing) that include proposed locations for the following:

- Digester control building
- Digesters 1, 2, 3, and 4

- Digesters 1 and 2 process (pump) building
- Digesters 3 and 4 process (pump) building
- PS and septage thickening building
- FOG building
- Septage-receiving area
- Odor control
- Centrate storage tank
- Maintenance building

Design standards for the overall civil construction (including grading, paving, and stormwater management) are included in Section 12.

ES-5 Sequencing, Coordination, and Cost

Permitting

Through the preliminary planning and design effort, the project team developed a summary of necessary permits associated with the proposed upgrades. The management of the permitting process included a strategic and integrated approach. This approach included engaging regulatory agencies early and often regarding the project and fostering a close relationship throughout the process, to help to avoid unexpected requirements and delays in the approval of permits. A summary of the permit requirements is provided in Section 13.

Delivery Method

General Contractor/Construction Manager (GC/CM) is a collaborative delivery method in which the County hires a design engineer and a GC/CM under separate contracts. The County elected to pursue permission from the Project Review Committee (PRC) as the next step in the pursuit of using GC/CM. The PRC controls the ability of agencies in the state of Washington to use alternative project delivery methods. CKTP staff, along with HDR Engineering, Inc. (HDR), presented to the PRC on September 28, 2023, and received unanimous approval to use the GC/CM process for the project.

Sequencing

To facilitate construction of the new digesters, the existing maintenance building will need to be demolished and the new process facilities may be phased to prioritize the new digesters and thickening building as the most critical pieces of the new process train. A new maintenance building will be constructed to serve CKTP staff. Phasing of the new maintenance building construction is currently under discussion because of uncertainties with permitting new construction.

Opinion of Probable Cost

Through this BOD development, HDR has prepared an opinion of probable construction cost (OPCC) for the expected CKTP upgrades. The level of detail and contingency for

the OPCC follow the Association for the Advancement of Cost Engineering (AACE) International Recommended Practice 18R-97 guidelines for a Class 4 estimate, which includes preliminary elements and has an accuracy range of -15 percent to -30 percent on the low side and +20 percent to +50 percent on the high side.

The OPCC is intended to be used as a check that the project is within the assumed budget and is based on the best judgment of experienced professionals generally familiar with the industry. However, because of the uncertainty of labor/materials prices and market/bidding conditions, the OPCC is not guaranteed to be the same as the actual construction cost.

The total OPCC for the proposed upgrades, as defined herein and detailed in Appendix M, is $98,557,000.

1 Introduction

Kitsap County (County) has recently completed a facility planning effort (as part of an updated Wastewater General Sewer Plan) that includes significant recommendations for upgrades to the solids-processing portion of the Central Kitsap Treatment Plant (CKTP). CKTP currently uses two mesophilic anaerobic digesters (originally constructed in approximately 1977) to provide Class B biosolids meeting pathogen reduction (Washington Administrative Code [WAC] Section 173-308-170) and vector attraction reduction (VAR) (WAC 173-308-180) requirements as outlined for Class B biosolids per the U.S. Environmental Protection Agency (EPA) Part 503 Biosolids Rule (as implemented by the Washington State Department of Ecology [Ecology] Biosolids Permit for CKTP) (Ecology 2022). These biosolids are then dewatered through an existing centrifuge system and hauled for land application in eastern Washington (Natural Selection Farms, Yakima County).

This document serves as a basis of design (BOD) and engineering report (in compliance with WAC 173-240-060) for the improvements necessary to address the solids-processing deficiencies outlined as part of the facility planning effort, presented primarily in the *Central Kitsap WWTP Liquid Hauled Waste Study* (LHWS) technical memorandum®) focused on liquid hauled waste (LHW) (Murraysmith 2022). This TM is the basis for the solids flow and loading projects, which are used throughout this report and modified only where specifically noted.

1.1 Background

CKTP is a regional solids facility that processes the following types of sludge and solids through mesophilic anaerobic digestion:

- **Primary sludge (PS):** Primary solids collected through the primary clarifiers at CKTP.
- **Waste activated sludge (WAS):** Biological solids from secondary treatment that come from both CKTP as well as the County's smaller regional wastewater treatment plants (WWTPs): Manchester, Kingston, and Suquamish. This waste can periodically include waste biosolids from other smaller regional facilities as allowed by CKTP staff.
- **Hauled septage:** CKTP is a regional facility for septage-hauling trucks, which can include septic tanks, portable toilets, and other raw sewage or septage wastes that are pretreated and processed through the digesters.
- **Fats, oils, and grease (FOG):** CKTP accepts grease loads from regional haulers for processing in the digesters. Currently grease loads are discharged into the primary scum pit and pumped to the digesters via that infrastructure.
- **Scum/foam:** Minor loads of primary and secondary scum are processed directly through the digesters.

CKTP has completed recent upgrades for its WAS-thickening (new building and equipment) and biosolids-dewatering systems (centrifuges), both of which have significant near-term capacity. However, the existing digestion facilities, septage- and

FOG-handling, and PS/septage sludge-thickening facilities are in poor condition, lack adequate capacity, are not compliant with current design standards, and lack redundancy. The critical needs, as partially noted in the LHWS (Murraysmith 2022) and further addressed in this report, are as follows:

- **Anaerobic digesters:** The digesters (two tanks, each 0.65 million gallons [MG]) are cast-in-place concrete with coated steel fixed covers and pumped mixing. A central control building between the existing tanks includes the biogas boilers, controls, pumps, heat exchangers (HEXs), and ancillary equipment. Exterior review of the tank structures indicates that the concrete is in relatively good condition; however, much of the equipment is at the end of its useful life and the roof, doors, and insulated paneling are in poor condition. In addition, the cover seals required emergency repairs in 2022 (because of leaking biogas) and are considered a high-risk point of failure. The facility was constructed prior to the introduction of National Fire Protection Association (NFPA) 820: *Standard for Fire Protection in Wastewater Treatment and Collection Facilities*. Consequently, the interior classification of the equipment, including the location of diesel-fired boilers within a space that shares a common wall with the digester, is no longer permitted and presents a safety hazard that requires remediation as part of the equipment upgrade. Coupled with the condition assessment is a need to expand the capacity of the digesters, as the current two-tank system (roughly 1.3 MG total) does not allow for a digester to be taken offline while still meeting minimum retention times for Class B solids (15 days) and does not provide the capacity for future projected loads over the next 20 years.
- **Primary sludge and septage thickening:** Currently, PS and septage are co-thickened in two gravity thickeners (GTs) prior to feeding to the digesters. The GTs include a central control building with grit removal (for septage). These structures were constructed at the same time as the existing anaerobic digesters, with walk-in covers, and most of the central control building and equipment are in poor condition.
- **Septage receiving:** The existing septage-receiving station (which includes a custom-designed rock trap and screening, with odor control) has created some operational issues because of offloading of trash/debris, lacks any redundancy, can handle only one truck at a time, and does not provide any means to equalize loads or monitor their water quality (such as pH) and actual flow (metering) from the trucks. Septage loads are a significant portion of the overall solids loading to CKTP and require significant integration into the overall process stream. Current septage loads are routed from the offloading station, through a wet well in the solids-processing building (SPB), to the existing GTs. The septage pumps within the SPB have reached the end of their useful life.
- **FOG receiving:** There is currently no designed system specifically for offloading and screening of FOG. FOG is currently pumped, unscreened, to the digesters, via the existing primary scum wet well. No flow monitoring (metering) is provided.
- **In-plant pump station (IPS):** The existing IPS is a circular wet well with two submersible pumps that provides general service for tank overflows, thickener overflows, WAS-thickening filtrate, filter backwash, sanitation sewer, and miscellaneous drainage. Material is pumped back to the CKTP headworks. The wet

well is currently heavily corroded and has difficulty in maintaining flows under certain conditions.

- **Maintenance building:** The current maintenance building is nearing the end of its useful life and is located in a portion of CKTP that is necessary for digestion and thickening expansion. Consequently, replacement of the maintenance building and expansion of the digestion and thickening facility are functionally part of the same project.

1.2 Project Overview

The CKTP Hauled-Waste Upgrades project is intended to address the deficiencies noted in the previous section and provide the necessary upgrades to allow CKTP to meet the requirements of the Ecology Biosolids Permit (Ecology 2022) and the Class B standards of its current solids-hauling operation through the planning horizon outlined in the LHWS (Murraysmith 2022) and Wastewater General Sewer Plan (year 2042 projections). This report outlines the overall project flows and loads, the BOD for each portion of the upgrade, and the standards that will be followed for the detailed design documents.

The design elements overall will provide a system that will comply with the Ecology *Criteria for Sewage Works Design* (Ecology 2023), referred to as the "Orange Book," as it relates to solids thickening and digestion—in particular, Chapter S (Residual Solids Management), with emphasis on Section S-2.2 (Solids Stabilization) and Section S-2.4 (Storage).

The primary elements of the new design will be composed of the following process systems detailed in this report and shown graphically in Figure 1-1:

- **Anaerobic digesters:** The existing two digesters and the associated central process control building will be refurbished, partially replaced, and upgraded to improve operation and allow for better compliance with NFPA 820. Two additional digesters will be added to CKTP, doubling the digestion volume from 1.3 MG to 2.8 MG. A separate control building will be constructed to house primary electrical distribution equipment as well as new boilers to supply heat to the digesters as well as the existing SPB.
- **Primary sludge and septage thickening:** A new building will be constructed to provide mechanical co-thickening of PS and septage, effectively replacing the aging GTs.
- **Septage handling:** A new septage-handling facility, including screening, grit removal, and flow equalization (EQ), will be constructed to improve operations, flow monitoring, flow control, redundancy, and septage pretreatment.
- **FOG handling:** A new FOG-handling facility (dedicated building) will allow for controlled offloading of FOG, separating it from scum-handling infrastructure, and provide a means for screening and pretreatment.
- **In-plant pump station:** A new IPS will replace the current corroded system, sized for the updated flows.
- **Centrate storage:** As part of the removal of the existing GTs, one of the two tanks will be refurbished to serve as a storage tank for CKTP centrate flows. This will allow

CKTP to reuse existing tankage as a means to better control the flow of ammonia (NH_3)-heavy centrate to the secondary treatment system and improve overall biological nutrient removal (BNR). This upgrade was recommended as an optimization project in previous work (HDR 2022) and fits within the structure of this project given the planned removal of the GTs from service.

- **Odor control:** New inorganic biofilters will be installed to address odor control needs for the septage, FOG, thickening, and centrate facilities.
- **Maintenance building:** A new maintenance building will replace the existing structure, with the current maintenance building space used for new digestion and thickening facilities.

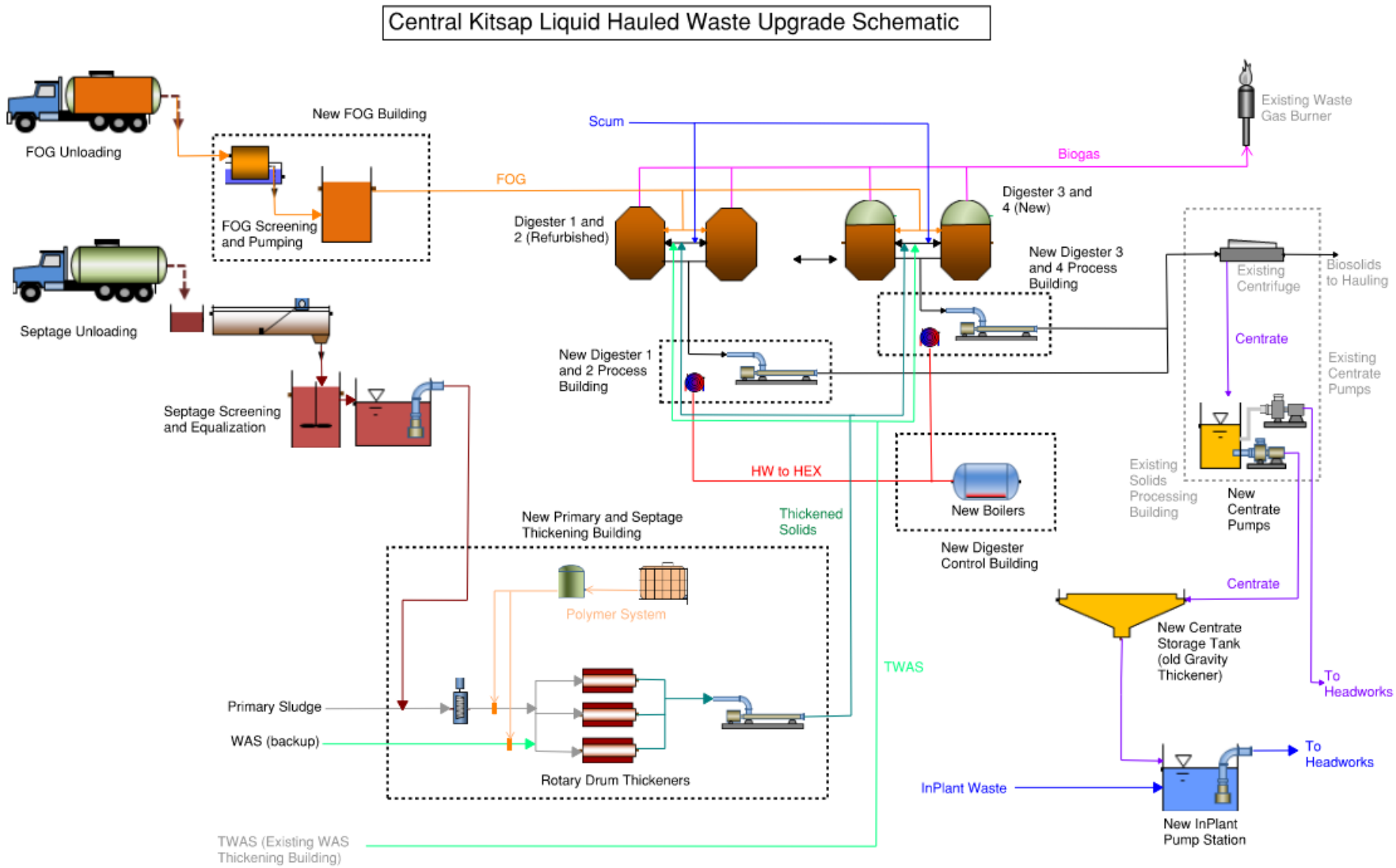

Figure 1-1. Process schematic for CKTP liquid hauled-waste upgrades

This page is intentionally left blank.

As part of the development of this report, detailed design workshops were conducted with CKTP staff to determine sizing, layout, and equipment selections for the primary treatment processes noted above. The summary results of these workshops are included in the appendices and are referenced in the main text of the report. The report itself only summarizes the BOD that was developed from those workshops, with details of the options reviewed and selection process itself included for documentation.

The new buildings and process areas that address the key upgrades listed above are summarized below and are detailed in the applicable sections that follow.

- Digesters 1 and 2 (north set, west to east)
- Digesters 3 and 4 (south set, north to south)
- Digesters 1 and 2 process building
- Digesters 3 and 4 process building
- Digester control building:
  - Electrical room
  - Boiler room
- PS and septage thickening building:
  - Electrical room
  - Polymer room
  - Thickening room
  - Odor control
- FOG building:
  - Electrical room
  - Utility room
  - FOG-handling room
  - Odor control
- Septage-receiving station:
  - Odor control
- Septage EQ tanks 1 and 2:
  - Septage EQ wet well
  - Septage EQ valve vault
- Centrate storage tank (CST):
  - CST flow control vault
  - Odor control
- IPS:
  - IPS wet well

  - IPS valve vault
- Maintenance building

1.3 Engineering Report Requirements

Table 1-1 provides a summary checklist of the content required in this report, per compliance with WAC 173-240-060. Each piece of content is noted as either not applicable (N/A) (based on the extent of this project) or the relevant section(s) where the content is located is noted for ease of reference.

Table 1-1. Location of relevant engineering report content per WAC 173-240-060

Content	Section (if applicable)
Owner name, address, telephone number, and Owner's authorized representative.	Kitsap County 12351 Brownsville Hwy NE Poulsbo, WA 98370 (360) 337-5631 Nick Martin, PMP
Project description including existing and proposed service areas.	Executive Summary, Section 1
Statement of quantity and quality of wastewater, including any industrial wastes (existing and expected future).	Section 2
The degree of treatment required based upon applicable permits and rules, the receiving body of water, the amount and strength of wastewater to be treated, and other influencing factors.	Section 1
Description of receiving water, applicable water quality standards, and how water quality standards will be met outside of the applicable dilution zone.	N/A
Treatment process proposed, degree of treatment, method of disposal, evaluation of alternatives and reasons why they are unacceptable.	Section 1 (overall schematic) Section 3 (FOG and septage) Section 4 (thickening) Section 5 (digestion) Section 6 (misc. systems)
Basic design data, sizing calculations, expected efficiencies of each process and entire plant, and character of effluent anticipated.	Section 2 (overall design criteria) Section 3 (FOG and septage) Section 4 (thickening) Section 5 (digestion) Section 6 (misc. systems)
Discussion of the various sites available, advantages and disadvantages of site(s) recommended. Proximity of residences or developed areas. Relationship of 25-year and 100-year flood to plant and plant processes.	N/A
Flow diagram showing general layout of various processes, location of effluent discharge, and hydraulic profile of system and any hydraulic-related portions.	Section 1.2
Discussion of infiltration and inflow problems, overflows and bypasses, and proposed corrections and controls.	N/A
Discussion of special provisions for treating industrial wastes, including pretreatment requirements for significant industrial sources.	N/A
Detailed outfall analysis or other disposal method selected.	N/A
Discussion of the method of final sludge disposal and alternatives considered.	N/A
Provision for future needs.	Section 2

Content	Section (if applicable)
Staffing and testing requirements for the facilities.	Section 1.2
An estimate of the costs and expenses of the proposed facilities, method of assessing costs and expenses; total amount shall include both capital costs and operations and maintenance (O&M) costs for the life of project and presented in terms of total annual cost and present worth.	Section 13
Statement regarding compliance with applicable state or local water quality management plan or plan adopted under the Federal Water Pollution Control Act as amended.	Section 1
Statement regarding compliance with the State Environmental Policy Act (SEPA) and the National Environmental Policy Act (NEPA), if applicable.	Section 13

Projects that use land application, including seepage lagoons, irrigation, and subsurface disposal:
• Soils and their permeability
• Geohydrologic evaluation of factors such as:
  • Depth to groundwater and groundwater movement during different times of the year
  • Water balance analysis of the proposed discharge area
  • Overall effects of the proposed facility upon the groundwater in conjunction with any other land application facilities that may be present
• Availability of public sewers
• Reserve areas for additional subsurface disposal
	N/A

Projects funded by EPA shall, in addition to the requirements of subsection (3) or (4) of this section, follow EPA facility plan guidelines contained in the EPA publication, “Guidance for Preparing a Facility Plan” (MCD-46), and shall indicate how the special requirements contained in 40 CFR 35.719-1 will be met.	N/A

Source: Washington State Legislature 2023.

This page is intentionally left blank.

2 Facility Design Criteria

Facility design criteria were developed in collaboration with CKTP staff during multiple workshops and review trials. Process flow diagrams were developed based on as-built drawings and proposed process improvements. The layout for facility improvements was informed by CKTP staff input and estimated sizing requirements for equipment, code requirements, etc. Historical and projected solids flow and load data were analyzed to determine facility design criteria for the project planning period. Data from CKTP staff, the LHWS (Murraysmith 2022), and prior HDR Engineering, Inc. (HDR) analysis informed solids flow and load estimates for current and future conditions for PS, WAS, septage and other hauled septage-type streams, FOG, and hauled thickened waste activated sludge (HTWAS). Additionally, rheology testing was conducted to characterize solids for process design criteria. This section describes available historical data, selected and projected facility design values, and rheology testing results.

2.1 Historical Solids Loading Data

Data primarily from CKTP staff and the facility plan informed historical flow and load estimates in this section. Data were generally available from January 2019 to March 2023 with some exceptions such as for septage data, which were provided for 2021 and 2022. Other data gaps and the basis of each solids stream estimate are described below. For clarity, solids stream flows and loads are summarized on one or two consecutive pages.

2.1.1 Historical PS Flows and Loads

PS flow and load data were not available, but CKTP staff has stated that PS pumps currently operate at about 75 gallons per minute (gpm) continuously throughout the day or about 108,000 gallons per day (gpd). Existing GTs exclusively process septage and PS so a mass balance for the GTs was conducted to estimate PS loads. GT daily flow and weekly total solids (TS) data were available from 2021–2022. Estimated septage loading, described in Section 2.1.3, was subtracted from GT effluent solids load to estimate PS solids loading. To estimate flows from these loads, an average PS TS value of 0.57 percent from recent testing was used to better represent current operating conditions that create a relatively dilute PS (Appendix E). Data were evaluated if GT effluent flow and TS and septage load values were available for the same day. Negative or statistically anomalous values were omitted for clarity. Though this approach provides context for available data and mass-balance dynamics, it is highly variable and will not be used for design. Figure 2-1 depicts the estimated PS flows and loads based on a TS of 0.57 percent. There is a gap in data from July to October 2022 because of lack of consistent flow and load data to meet the data alignment criteria.

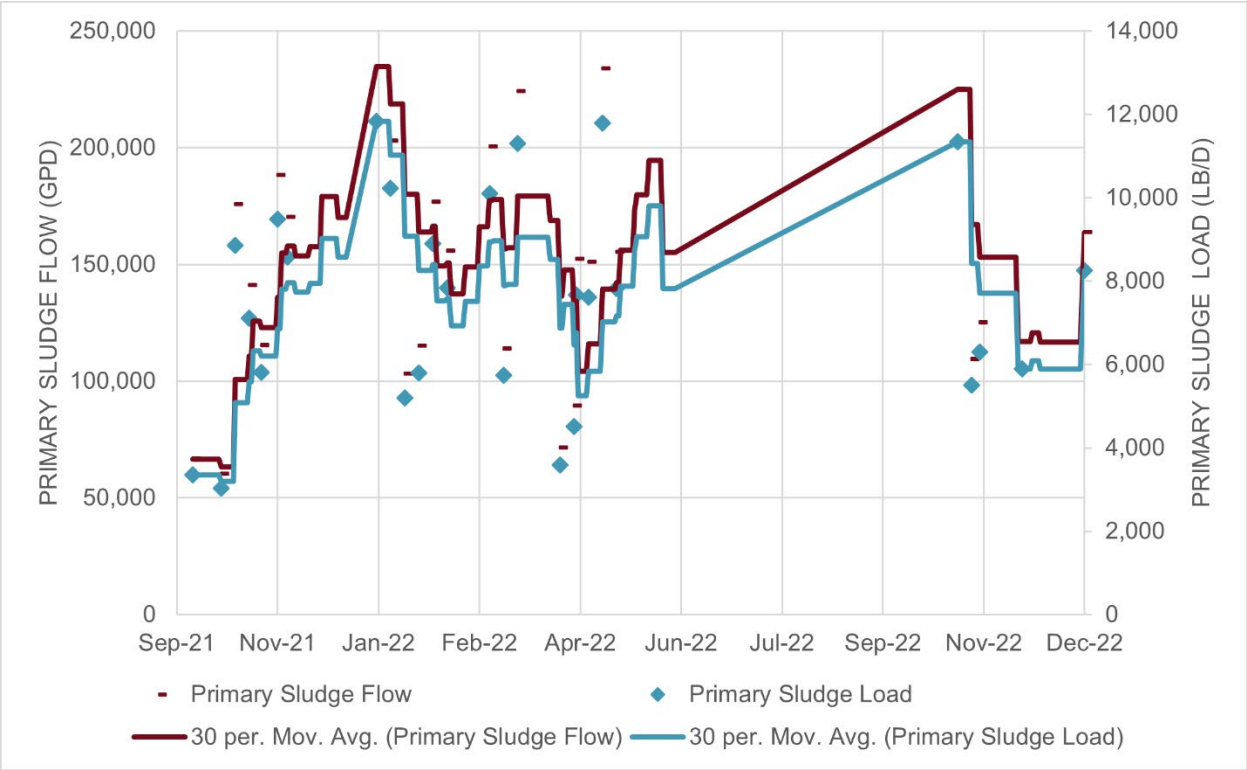

Figure 2-1. Primary sludge flows and loads

2.1.2 Historical WAS Flows and Loads

CKTP staff provided daily WAS flow and concentration data from 2019 to March 2023. Test results for WAS TS resulted in an average of 0.41 percent whereas calculated TS from flow and concentration data yielded an average of 0.30 percent (Appendix E). Figure 2-2 depicts estimated WAS flows and loads. Figure 2-3 depicts estimated WAS percent TS based on provided data.

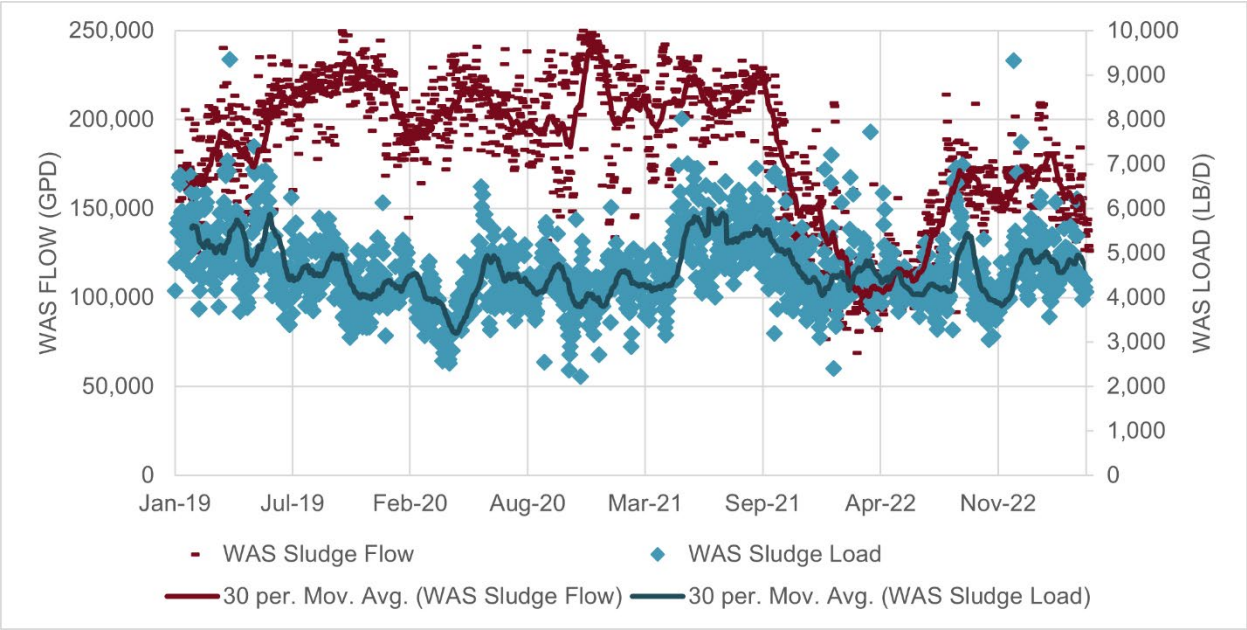

Figure 2-2. WAS flows and loads

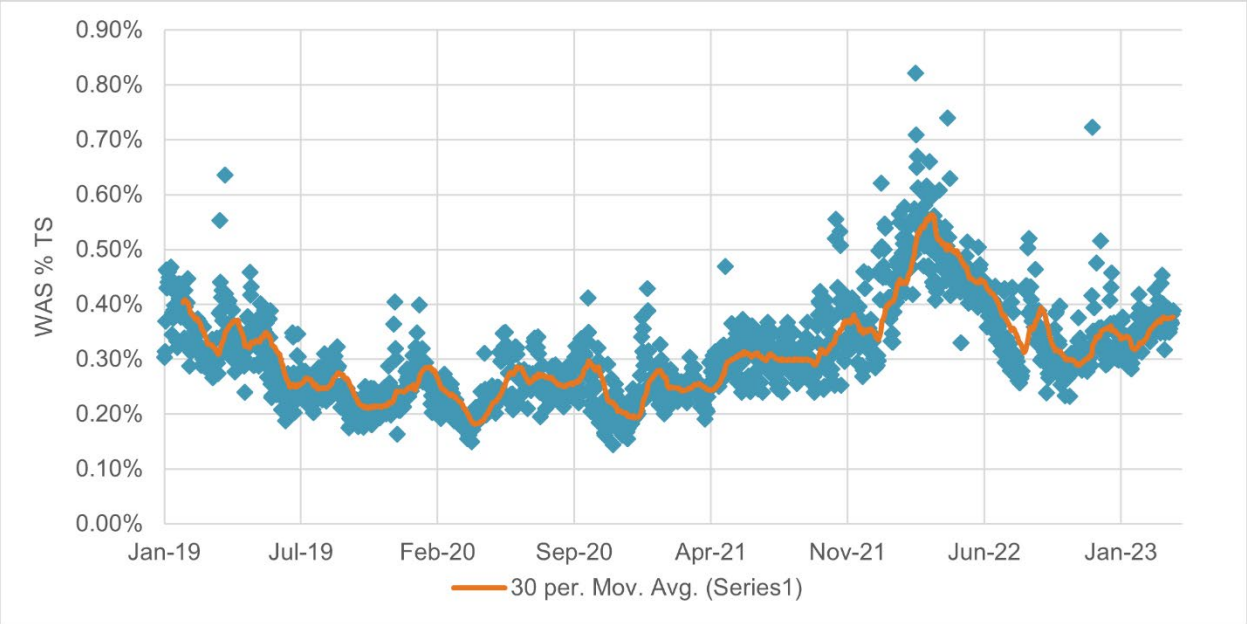

Figure 2-3. WAS estimated percent TS

2.1.3 Historical Septage Flows and Loads

Septage flow and solids data were provided from 2021 to 2022. Daily septage-processing data included the date, company name, cost, type of septage, and volume processed. Weekly TS and volatile solids (VS) values were determined by CKTP staff to characterize septage further. Though the data set provides a relatively comprehensive picture of septage activity, total daily septage flow is not metered but rather it is assumed to be the cumulative volume of each truck processed each day whether or not the truck is completely full. It is assumed that this approach does not underestimate septage flows and loads and incentivizes septage haulers to completely fill trucks before processing.

Various septage types defined in the databases provided include septage, portable toilet, grease, biosolids, “other,” and “blank.” It was assumed that all septage types defined should be used to evaluate current septage flow and load conditions except for grease, which was assumed to be the FOG waste stream that would not undergo thickening.

Biosolids were noted by CKTP staff to sometimes include hauled biosolids from other facilities, such as TWAS, that were not combined with other hauled and on-site TWAS in the thickened sludge blending tank (TSBT). Biosolids accounted for an average flow of 2,000 gallons per day or, assuming a TS of 5%, about 90 lb/d of solids. Though a fraction of these biosolids could be counted as HTWAS, they have been historically counted in the septage database. Biosolids flow and loading accounts for about 9% of daily average septage flow and 1% of daily average septage solids loading. Despite these discrepancies, the biosolids data was included in the total septage flow and load analysis because typical operations do not record the flow or load as being sent specifically to the TSBT and, in the future, these biosolids will be processed through the septage receiving station. Impacts of this assumption on hauled TWAS flows and loads are discussed in section 2.1.5.

Figure 2-4 depicts solids TS and VS. Figure 2-5 depicts total daily volume processed by septage type. Figure 2-6 depicts total flow and load data with load data having been determined by TS data points and associated flow for that same day. Recorded data do not reflect receipt of any septage flows or loads for December 2021 and only biosolids were received from August to September 2022. For clarity, recorded zero values were removed from graphs.

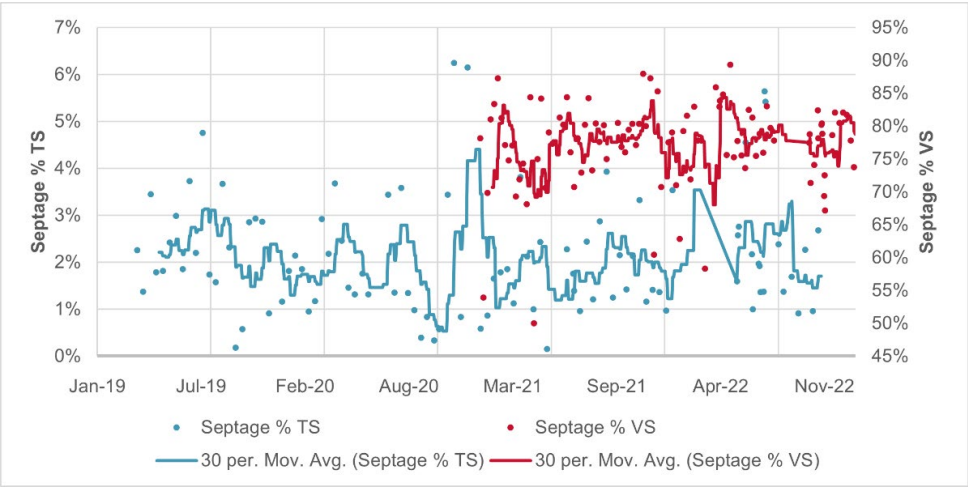

Figure 2-4. Septage percent TS and percent VS

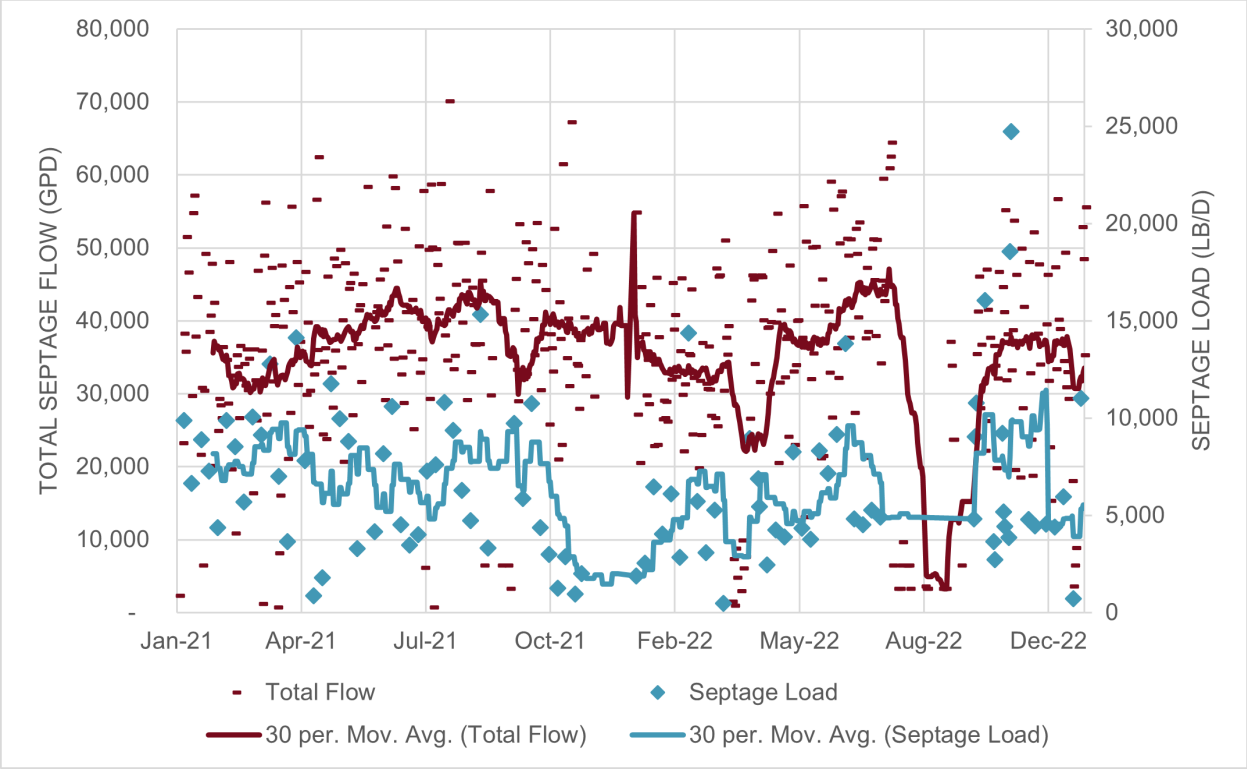

Figure 2-5. Septage flow and load

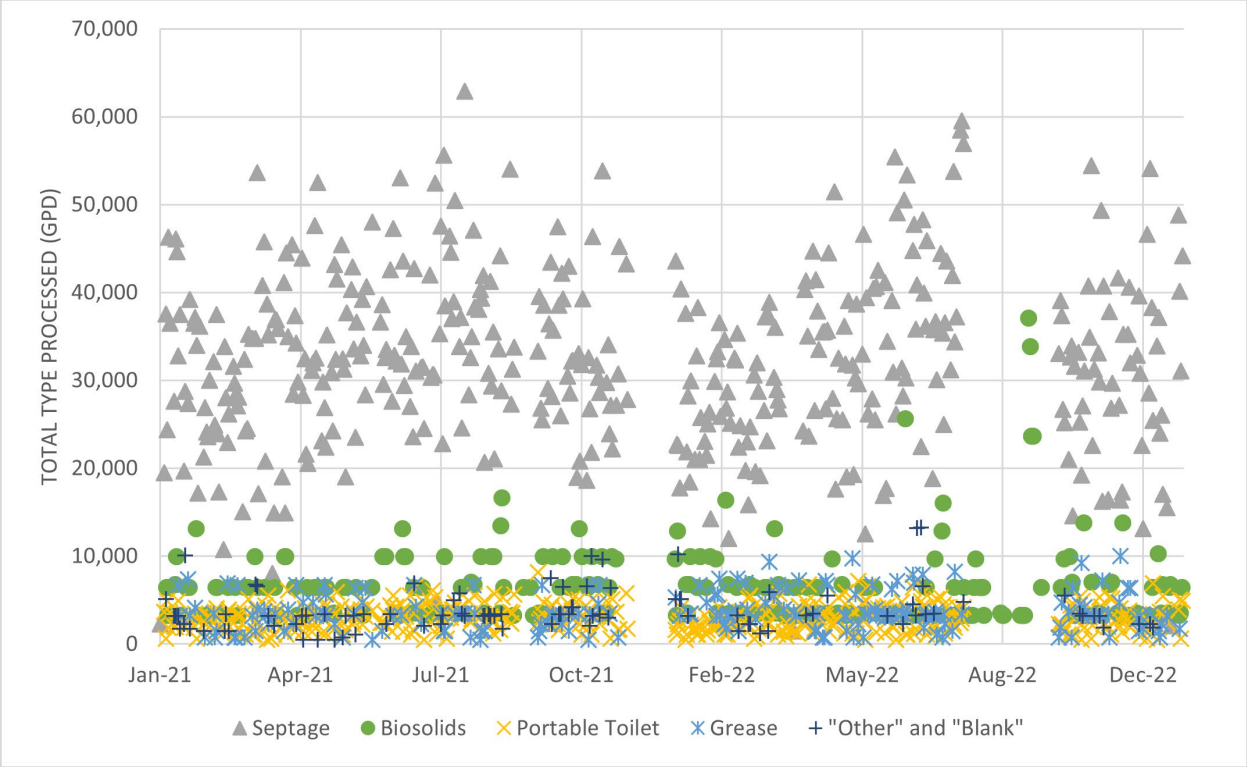

Figure 2-6. Septage flows by type

2.1.4 Historical FOG Flows and Loads

As part of the septage flow and solids data from 2021 to 2022, FOG flow data were included. Various septage types were labeled in the provided septage databases with the type labeled as “grease” being defined as the received FOG flows. TS data were not provided for FOG but, per the facility plan, a value of 1.81 percent was assumed to estimate FOG loading. Figure 2-7 depicts FOG flow and load data. For clarity, recorded zero values were removed from graphs.

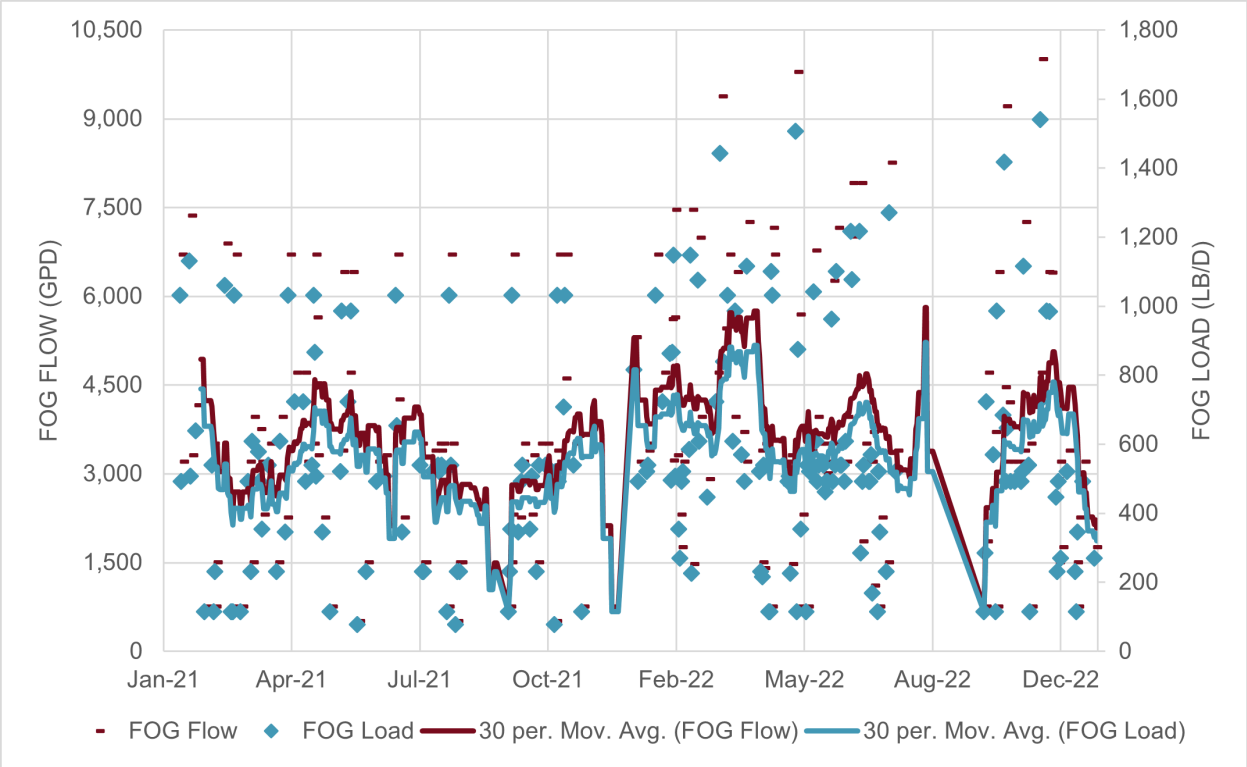

Figure 2-7. FOG flows and loads

2.1.5 Historical HTWAS Flows and Loads

HTWAS data was provided for the Kingston plant from April 2015 to June 2023 and for the Suquamish and Manchester plants from January 2020 to June 2023. Averages from 2020 to 2023 indicate HTWAS from all three facilities was delivered three times per week at a flow and load of 4,300 gpd and 1,960 lb/d, respectively, with a TS of about 5.2%. Figure 2-8 summarizes results from provided satellite plant data.

TSBT flow and TS data was also provided. Because the TSBT receives only HTWAS and CKTP TWAS, a mass-balance estimate of HTWAS solids loading was conducted. Daily TSBT flow and weekly TS data from 2019 to 2023 were evaluated in parallel with aforementioned WAS load estimates, adjusted to 95 percent of original value to account for WAS solids-thickening impacts, to determine estimated HTWAS loads. An assumed TS of 5.25 percent, which is comparable to TSBT average TS of 5.36 percent, was used to estimate associated HTWAS flows. Though this approach provides additional context for available data and mass-balance dynamics, it is highly variable and will not be used for design. Figure 2-9 depicts estimated HTWAS flows and loads.

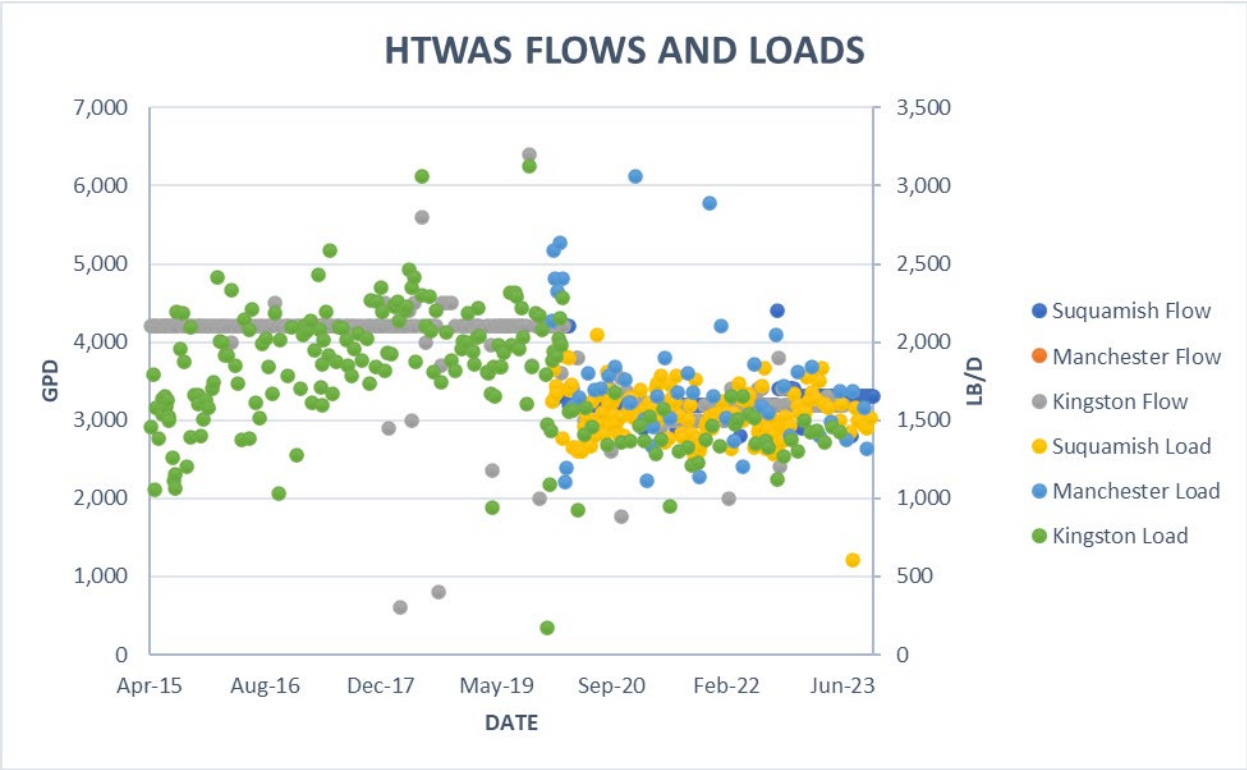

Figure 2-8. Recorded HTWAS flows and loads from satellite plants

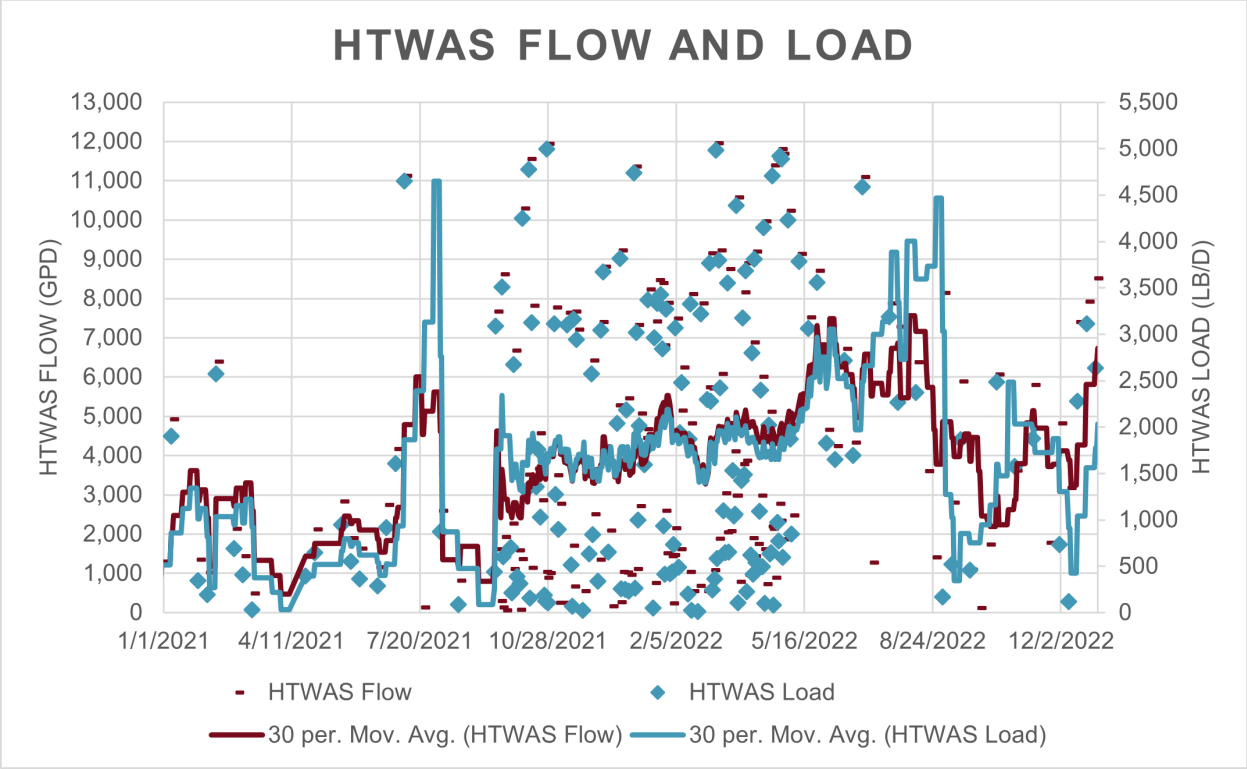

Figure 2-9. Estimated HTWAS flows and loads

2.2 Projected and Elected Solids Design Flows and Loads

To determine solids process improvement design criteria, each solid stream's historical and projected flows and loads were evaluated by comparing facility plan projections, aforementioned recorded data, and CKTP staff information. This section describes the basis of each data category's values for each stream: facility plan, recorded data, and design values. For all streams, design flow and load values were rounded up to the nearest hundredth. For clarity, each solids stream flows and loads are summarized on one or two consecutive pages. Table 2-1 below summarizes the selected design values for each stream. The table presents the raw loading of the applicable streams prior to any treatment (receiving, thickening, digestion).

Table 2-1. Summary of selected flow and load design values

Stream	Parameter	Current		2028		2042	
		AA	MM	AA	MM	AA	MM
PS	Flow (gpd)	125,800	147,200	96,600	110,800	98,500	110,400
	Load (lb/d)	5,300	6,200	6,100	7,000	8,300	9,300
WAS	Flow (gpd)	152,600	200,100	121,100	156,700	156,700	201,800
	Load (lb/d)	4,500	5,900	5,100	6,600	6,600	8,500
Septage	Flow (gpd)	23,000	33,000	28,500	40,900	52,100	75,000
	Load (lb/d)	4,100	5,900	5,100	7,300	9,300	13,400
FOG	Flow (gpd)	1,800	5,300	2,400	6,500	3,500	11,200
	Load (lb/d)	300	900	400	1,100	600	1,900
HTWAS	Flow (gpd)	4,600	7,400	5,300	8,400	6,300	9,900
	Load (lb/d)	1,800	2,900	2,100	3,300	2,500	3,900

AA = average annual; MM = maximum month.

2.2.1 PS Flow and Load Selection

PS specific gravity (S.G.) was assumed to be 1.01 for all categories. Table 2-2 and Table 2-3 summarize the facility plan, recorded data, and design values selected. Note that in Table 2-2 the design flows are assumed to decrease, not because the load decreases, but due to the fact that CKTP will begin to thicken primary sludge in the primary clarifiers over time in order to reduce hydraulic loading to the thickening process. Currently, primary sludge is pumped at a thinner rate (see footnotes in Table 2-3), but CKTP staff have demonstrated they can effectively thicken to 1-2 percent in the clarifier, which will allow for better performance of the new thickening equipment.

Table 2-2. PS current and future flows (gpd)

Data category	Current		2028		2042	
	AA	MM	AA	MM	AA	MM
Facility plan	75,890	88,150	87,100	99,900	118,500	132,800
Recorded data	105,700	122,900	122,200	140,000	168,000	187,900
Design[a]	**125,800**	**147,200**	**96,600**	**110,800**	**98,500**	**110,400**

a. Flows decrease in the future because assumed TS increases with increasing solids loading. See Table 2-3 for more information.

Table 2-3. PS current and future loads (lb/d)

Data category	Current		2028		2042	
	AA	MM	AA	MM	AA	MM
Facility plan[a]	5,310	6,180	6,100	7,000	8,300	9,300
Recorded data[b]	5,075	5,900	5,900	6,700	8,100	9,000
Design[c]	**5,300**	**6,200**	**6,100**	**7,000**	**8,300**	**9,300**

a. TS of 0.83% calculated from facility plan flows and loads.
b. TS of 0.57% assumed from dilute PS tests (Appendix E).
c. TS of 0.50% assumed for current, 0.75% for 2028, and 1.00% for 2042.

Facility Plan Values

Facility plan future primary average annual (AA) and maximum month (MM) values were determined from facility plan report tables with TS calculated from flows and loads in all cases. Current AA and MM values were backprojected using a linear trend.

Recorded Data

Recorded data for PS values were initially estimated in Section 2.1.1 but because of high variability in the data, an alternative approach was taken. Daily GT average flow and weekly average TS values were used to determine average daily GT effluent load and then the 5-day average daily septage flow and load was deducted to estimate PS load. A TS of 0.57 percent was used to calculate current AA and MM loads. Future AA and MM loads were linearly projected using facility plan trends and flows were determined using the same TS for current AA and MM.

Design Values

Design values for current PS were based primarily on facility plan projections. Current AA and MM loads reflected the aforementioned facility plan back-projection using a TS of 0.50 percent to determine associated flows. For future conditions, facility plan projected loads were used with an assumed TS of 1.25 percent to determine flows.

2.2.2 WAS Flow and Load Selection

WAS specific gravity was assumed to be 1.01 for all categories. Table 2-4 and Table 2-5 summarize the facility plan, recorded data, and design values selected. Note that the design assumes a higher solids loading that than the facility plan (Table 2-5), making the approach in this memorandum more conservative, but the design flow (Table 2-4) is relatively similar to the facility plan and recorded data, as it is assumed that WAS thickening will be slightly improved to 0.5 percent (as noted in the footnotes in Table 2-5) over time via changes in the operation of the secondary clarifiers and operation of the secondary system at a higher level of suspended solids (3,000 mg/L or more) for BNR operation.

Table 2-4. WAS current and future flows (gpd)

Data category	Current		2028		2042	
	AA	MM	AA	MM	AA	MM
Facility plan	118,174	148,453	134,625	168,182	180,687	223,425
Recorded data	129,862	170,146	146,313	189,876	192,375	245,119
Design[a]	**152,600**	**200,100**	**121,100**	**156,700**	**156,700**	**201,800**

a. Flows decrease in the future because assumed TS increases with increasing solids loading. See Table 2-3 for more information.

Table 2-5. WAS current and future loads (lb/d)

Data category	Current		2028		2042	
	AA	MM	AA	MM	AA	MM
Facility plan[a]	2,986	3,751	3,402	4,250	4,566	5,646
Recorded data[b]	4,485	5,876	5,053	6,558	6,644	8,465
Design[c]	**4,500**	**5,900**	**5,100**	**6,600**	**6,600**	**8,500**

a. TS of 0.30% calculated from facility plan flows and loads.
b. TS of 0.41% determined from average of testing results (Appendix E).
c. TS of 0.35% assumed for current conditions and TS of 0.5% assumed for future conditions as a product of MLSS increasing to support BNR.

Facility Plan Values

Facility plan loads for current AA and MM were backprojected from future facility plan values using a linear trend. Future facility plan load values were used. A TS of 0.30 percent was used for current and future conditions to estimate WAS flow.

Recorded Data

Recorded data for WAS are described in Section 2.1.2. Current AA and MM flow were based on the overall average of recorded 2021–2022 data whereas MM was based on the maximum of a 30-day running average for the same data. A TS of 0.41 percent was assumed based on recent test results (Appendix E). Future AAF and MMF were linearly projected based on facility plan flow values above.

Design Values

The 4 years of WAS flow and concentration data provided more dependable and conservative estimates of WAS flow and load then facility plan estimates. For current AA and MM WAS loads, recorded values were used in conjunction with an assumed TS of 0.35 percent to estimate current flows. Future AA and MM loads were composed of projected recorded data. To estimate future flows, a TS of 0.50 percent was used.

2.2.3 Septage Flow and Load Selection

Septage specific gravity was assumed to be 1.02 for all categories. Table 2-6 and Table 2-7 summarize the facility plan, recorded data, and design values selected.

Table 2-6. Septage current and future flows (gpd)

Data category	Current		2028		2042	
	AA	MM	AA	MM	AA	MM
Facility plan	23,000	32,680	30,270	43,010	52,420	74,470
Recorded data	22,920	32,960	28,390	40,900	51,850	74,750
Selected	**23,000**	**33,000**	**28,500**	**40,900**	**52,100**	**75,000**

Table 2-7. Septage current and future loads (lb/d)

Data category	Current		2028		2042	
	AA	MM	AA	MM	AA	MM
Facility plan[a]	4,040	5,740	5,300	7,560	9,210	13,090
Recorded data[b]	4,090	5,890	5,070	7,305	9,260	13,350
Selected[b]	**4,100**	**5,900**	**5,100**	**7,300**	**9,300**	**13,400**

a. TS of about 2.07% calculated from facility plan flows and loads.
b. TS of 2.10% determined from recorded average from 2021–2022.

Facility Plan Values

Facility plan current and future septage AA and MM values were gathered from facility plan report tables with TS calculated from flows and loads in all cases.

Recorded Data

Recorded data for septage values are described in Section 2.1.3. Current AAF was determined based on the AA of recorded data whereas MM was based on the maximum of a 30-day running average. Because septage is received only during business hours,

or 5 days per week, AAs incorporate zero values every weekend. TS was determined from the average of recorded data for current and future conditions. Current data were projected using the facility plan's estimated annual increase of 4.4 percent to estimate 2028 and 2042 AA and MM flows and loads.

Design Values

Design values for current septage were based primarily on facility plan values with an increased TS of 2.10 percent to represent average recorded conditions. CKTP staff has recommended that the maximum septage load for 2042 MM be assumed to be the facility plan's 2042 AA load because it is expected that there is not enough developable land to reach the facility plan projected load for 2042 MM. To maintain conservative estimates consistent with the facility plan, this adjustment was not made for design values in this section. CKTP staff recommendations to use lower 2042 MM conditions are discussed further in thickening equipment design considerations in Section 4.

2.2.4 FOG Flow and Load Selection

FOG specific gravity was assumed to be 1.02. Table 2-8 and Table 2-9 summarize the facility plan, recorded data, and design values selected.

Table 2-8. FOG current and future flows (gpd)

Data category	Current		2028		2042	
	AA	MM	AA	MM	AA	MM
Facility plan	1,540	4,830	2,030	6,350	3,520	11,000
Recorded data	1,340	5,820	1,950	7,600	3,640	12,920
Selected	**1,800**	**5,300**	**2,400**	**6,500**	**3,500**	**11,200**

Table 2-9. FOG current and future loads (lb/d)

Data category	Current		2028		2042	
	AA	MM	AA	MM	AA	MM
Facility plan[a]	270	850	360	1,120	620	1,940
Recorded data[b]	210	900	300	1,170	560	1,990
Selected[c]	**300**	**900**	**400**	**1,100**	**600**	**1,900**

a. TS of 2.07% calculated from facility plan flows and loads.
b. TS of 1.81% determined from facility plan written description of FOG.
c. TS of 2.00% selected for design.

Facility Plan Values

Facility plan current and future FOG AA and MM values were gathered from facility plan report tables with TS calculated from flows and loads in all cases.

Recorded Data

Recorded data for FOG values are described in Section 2.1.4. Current AAF was determined based on the AA of recorded data whereas MM was based on the maximum of a 30-day running average. Because FOG is received only during business hours, or 5 days per week, AAs incorporate zero values every weekend. TS was assumed to be 1.81 percent per the facility plan. Current data were projected using the facility plan linear load trends to estimate 2028 and 2042 AA and MM flows and loads.

Design Values

Design values for current septage were based primarily on facility plan values with an assumed TS of 2.00 percent. This TS adjustment is closer to facility plan table values as compared to the written or reported TS value of 1.81 percent. Because FOG is received only during business hours, or 5 days per week, AAs incorporate zero values every weekend.

2.2.5 HTWAS Flow and Load Selection

HTWAS specific gravity was assumed to be 1.05. Table 2-10 and Table 2-11 summarize the facility plan, recorded data, and design values selected.

Table 2-10. HTWAS current and future flows (gpd)

Data category	Current		2028		2042	
	AA	MM	AA	MM	AA	MM
Facility plan	1,773	2,752	2,079	3,261	2,937	4,685
Recorded data	4,000	6,310	4,670	7,240	5,500	8,540
Selected	**4,600**	**7,400**	**5,300**	**8,400**	**6,300**	**9,900**

Table 2-11. HTWAS current and future loads (lb/d)

Data Category	Current		2028		2042	
	AA	MM	AA	MM	AA	MM
Facility plan[a]	796	1,235	933	1,463	1,318	2,102
Recorded data[b]	1,839	2,900	2,146	3,331	2,531	3,928
Selected[b]	**1,800**	**2,900**	**2,100**	**3,300**	**2,500**	**3,900**

a. TS of 5.12% calculated from facility plan flows and loads.
b. TS of 5.25% selected for recorded and design values.

Facility Plan Values

Facility plan current and future HTWAS AA and MM values were gathered from facility plan report tables with TS calculated from flows and loads in all cases.

Recorded Data

Current AA load was determined based on the average of daily TSBT flow and weekly TSBT TS data from 2019–2023 less the average current WAS load described in Section

2.2.2. Current MM load was determined using the MM:AA peaking factor from the facility plan. Flows were calculated using an assumed TS of 5.25 percent as this value was approximately the average of facility plan values and recorded TSBT TS of 5.36 percent. Recorded data satellite plants was comparable to TSBT mass balance estimates but because the TSBT mass balance potentially incorporates non-satellite hauled biosolids loads it was the preferred method for recorded values. Current data were projected using the facility plan linear load trends to estimate 2028 and 2042 AA and MM flows and loads.

Design Values

For current AA and MM HTWAS loads, recorded values were used in conjunction with an assumed TS of 5.25 percent to estimate current flows. Future AA and MM loads employed projected recorded data. Though design values are higher than prior facility plan estimates, the provided data and additional mass balance comparison suggest a required increase in estimated current flows and loads.

2.3 Rheology Testing and Analysis

When pumping thickened solids (typically streams in which the solids content is more than 2 percent), the fluid begins to exhibit a variable response to the shear forces of the pump. As opposed to water, a Newtonian fluid that maintains a consistent viscosity, thickened solids behave as non-Newtonian fluids in which viscosity varies with shear stress. This can greatly affect line pressures and pump sizing. Because of the high solids content of thickened solids streams at CKTP, field characterization of rheological properties for each solid stream was conducted to develop criteria for non-Newtonian process design.

2.3.1 Rheology Testing Background

HDR owns and operates an in-house Brookfield DVNext rheometer that can collect various data by applying torque to a spindle that spins in a fluid sample. For a given sampling event, the rheometer typically measures viscosity, shear rate and shear stress, temperature, spindle speed, and torque percent.

Three streams were identified for rheology testing to inform process design for this project. Combined thickened primary sludge (TPS) and septage, thickened waste activated sludge (TWAS), and digested sludge (DIG) samples were tested to determine rheological characteristics applicable to the required design criteria. Samples were tested in the summer to measure anticipated seasonal changes in sludge characteristics. Additional sampling and testing will be collected during the winter season in early 2024 for further data collection. This report summarizes and evaluates hydraulics and pump sizing based on the summer data alone. Further refinement of sizing will account for observed results from winter data.

2.3.2 Rheology Testing Results

Preliminary results of rheology testing are described below. Two sampling events occurred over summer 2023, when the following samples were collected and analyzed:

- **Sample Day 1 (August 31, 2023):**
  - TPS at 4.65 percent TS
  - CKTP TWAS at 5.43 percent TS
  - DIG at 2.14 percent TS
- **Sample Day 2 (September 7, 2023):**
  - TPS at 3.84 percent TS
  - Decanted thickened primary sludge (TPSD) at 4.67 percent TS
  - CKTP TWAS at 4.62 percent TS
  - HTWAS at 4.75 percent TS
  - DIG at 2.05 percent TS

Figure 2-10 shows the results of the summer 2023 samples.

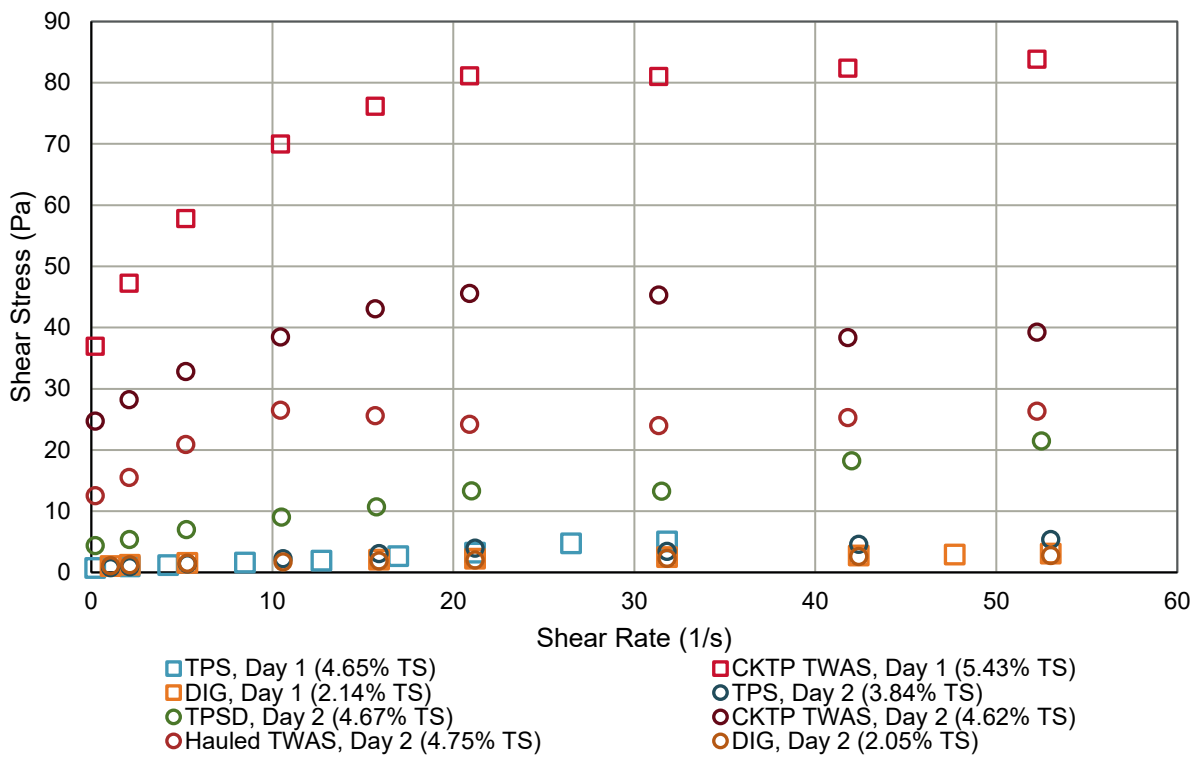

Figure 2-10. Rheological data results, shear stress versus shear rate

Key takeaways from this analysis include the following:

- CKTP TWAS versus CKTP + HTWAS: CKTP TWAS has more TS and is more viscous. Therefore, modeling only CKTP TWAS is more conservative for design.
- All TWAS samples were significantly more viscous than the DIG and TPS samples. Therefore, TWAS pumps will be the most affected relative to pump design.

- DIG has a much lower shear rate range. However, because of the low TS and shear stress values, this fluid is likely easier to pump compared to the TWAS and TPS.

The rheological data of non-Newtonian sludge at different solids concentrations are required for pump design for these fluids. CKTP-specific sampling and testing can be the most dependable reference for this analysis, especially when evaluating friction losses through piping and fittings. These results, various fit models, and normalization bases will be evaluated to establish preliminary design criteria for thickened sludge and sludge transfer pumps based on the summer 2023 data. Winter sampling will also be conducted as it is critical to more conservative pump sizing because it is typically more difficult, because of increased viscosity, to pump sludge at lower temperatures.

The standard operating procedure (SOP) and raw data tables for each stream sample are provided in Appendix I.

This page is intentionally left blank.

3 Septage and FOG Receiving and Treatment

The following sections outline the BOD for the new septage- and FOG-receiving facilities proposed for CKTP.

3.1 Septage Overview

The existing septage-receiving station at CKTP, shown in Figure 3-1, currently experiences several operational-related issues including inefficient rock and large debris removal, lack of redundancy, and the inability to monitor septage parameters in real time during offloading (e.g., pH, flow metering, etc.). Additionally, the existing septage-receiving station does not include any form of equalization, which limits operational flexibility subsequent to the screening process. As part of the hauled-waste upgrades, and with the replacement of the existing GTs, septage will be conveyed to new mechanical thickening equipment through an interconnection with new PS piping in the PS and septage thickening building. Septage receiving and treatment improvements will include the following:

- Two new 6-inch-diameter truck connections
- A new septage influent box with manual bar screens and gravity bypass
- External rock traps and flow metering
- Two new screening systems with grit removal
- Residual grease removal
- Monitoring equipment and instrumentation
- Septage EQ tanks, wet well, and submersible pumps
- Wash water at applicable points throughout the receiving and treatment process including the influent box, manual bar screens, septage-screening equipment, and EQ tanks (hot water is currently not assumed for the design of septage receiving, but can be added as an extension from the FOG building if desired)

The improvements will also include two bypass configurations to allow septage receiving either under emergency conditions, or when the septage screening and degritting equipment is not operational. Brief descriptions of each bypass configuration are provided below.

3.1.1 Septage Gravity Bypass

Septage will be intercepted between the influent box and screening equipment, and gravity bypass around both screening and degritting systems to a new manhole (MH) located adjacent to the Decant Facility. A portable bypass pump will be required to pump from the new manhole into the Decant Facility. Due to the redundant screening and degritting systems, the likelihood of implementing this bypass configuration is low.

3.1.2 Septage Pumped Bypass

Screened and degritted septage will be intercepted in the EQ valve vault through a bypass piping and valve configuration, bypassing the new mechanical thickening equipment, and pumped to existing MH 11 located upstream of the headworks distribution channel.

3.1.3 Septage Workshop Material

Appendix C includes the workshop fact sheets, meeting minutes, and presentation as a record of the various septage receiving and treatment alternatives evaluation and selection. Final equipment selection and sizing is described in Section 3.4.

Figure 3-1. Existing septage-receiving station

3.2 FOG Overview

FOG, or trap grease, consists of grease collected from food service establishments (i.e., grease traps), or food processing businesses. FOG at CKTP is currently received and offloaded into the primary clarifier scum pit and pumped into the existing digesters through an existing scum pump and associated piping, which are nearing the end of their useful service life. FOG receiving will remain a separate process from septage receiving and will include a new FOG building dedicated to the receiving, screening, and feeding of FOG at temperatures that prevent congealing in transit and promote assimilation or blending before being introduced into the digestion process. The FOG process and instrumentation diagrams (P&IDs) (Appendix F) currently show direct injection of FOG

into each digester, which will serve as the basis of design and is intended to minimize time in piping or contact with the heat exchanger. FOG receiving and treatment improvements will include the following:

- New 4-inch-diameter truck connection
- External rock trap and flow metering
- FOG screening system with monitoring equipment and instrumentation
- FOG screening system bypass and grinder
- FOG-receiving tank with submersible mixer
- FOG feed pumps to pump FOG at a controlled rate to the digesters
- Hot and cold spray/wash water for the rock trap, screening equipment, and FOG-receiving tank
- Hot water connection points located throughout the building to provide wash water for hose bibs and direct connections to FOG piping for manual flushing

3.2.1 FOG Workshop Material

Appendix C includes the workshop fact sheets, meeting minutes, and presentation as a record of the various FOG receiving and treatment alternatives evaluation and selection. Final equipment selection and sizing is described in Section 3.4.

3.3 Septage and FOG Flows and Loads

As summarized in Sections 2.2.3 and 2.2.4, current and projected flows and loads have been identified for both septage and FOG; however, the improvements planned for each system incorporate additional design criteria to accommodate operational flexibility, and most significantly, the variability in frequency and volume for septage and FOG delivery. The following additional criteria were used in the development of selected design criteria for the proposed improvements:

- **Septage:**
  - Two 100,000-gallon (gal) EQ basins will allow for operational flexibility, and controlled flow-metered feeding to the new mechanical thickening equipment.
  - Assumed water:septage dilution of 2:1 by volume to account for added water during the septage receiving and treatment processes. Submersible pumping equipment and associated variable-frequency drives (VFDs) designed to handle pumping rates up to 150,000 gpd (approximately 105 gpm).
  - Screening and degritting equipment hydraulic capacity of 576,000 gpd (400 gpm) at 3 percent TS, and 410,400 gpd (285 gpm) at 6 percent TS.
- **FOG:**
  - One 7,500-gallon FOG-receiving tank with submersible mixer.
  - FOG-screening equipment with a capacity of 950,400 gpd (660 gpm) at 3–4 percent TS.

- Progressive-cavity FOG feed pumping equipment and VFDs designed to handle pumping rates up to 72,000 gpd (approximately 50 gpm).

3.4 Septage and FOG Equipment Selection

The following sections detail the specific equipment selected to achieve the design criteria listed in the previous sections.

3.4.1 Septage Equipment

This section describes selection of septage equipment, including the septage-screening system.

Septage-Screening System

Septage equipment is typically manufactured as a packaged system to perform preliminary treatment of septage by removing floating, particulate, or fibrous material; aerated grit removal; and residual grease skimming. The selected packaged system for the septage receiving and treatment improvements is the Lakeside Raptor® Complete Septage Plant (model 31CPSAG). The pre-engineered Lakeside Raptor Complete Septage Plant will provide fine screening, grit removal in a designated grit chamber that includes aeration to keep organics suspended and allows grit to settle, regardless of flow, and residual grease removal through a motorized skimmer. Each Lakeside Raptor Complete Septage Plant includes a three-plane cylindrical bar screen complete with screen basket, rotating rake, cleaning comb, concentric screw conveyor, dewatering screw, grit aeration system with blowers, grease collection and removal system, automated grease skimming system, grease pump, spray wash system, and screenings press with drive unit. The pre-engineered housing includes gasketed covers with a tank vent for odor control connection and ultrasonic liquid level sensing system. Additionally, the packaged system includes weather protection; screenings and grit baggers; and a Raptor Acceptance Control System (RACS) control station with a security access and keycard system to record time, volume, pH, etc. of septage deliveries from authorized dischargers.

A section of the proposed Lakeside Raptor Complete Septage Plant is shown in Figure 3-2, an example of a complete plant installation is shown in Figure 3-3, a Lakeside RACS control panel is shown in Figure 3-4, and design criteria are listed in Table 3-1.

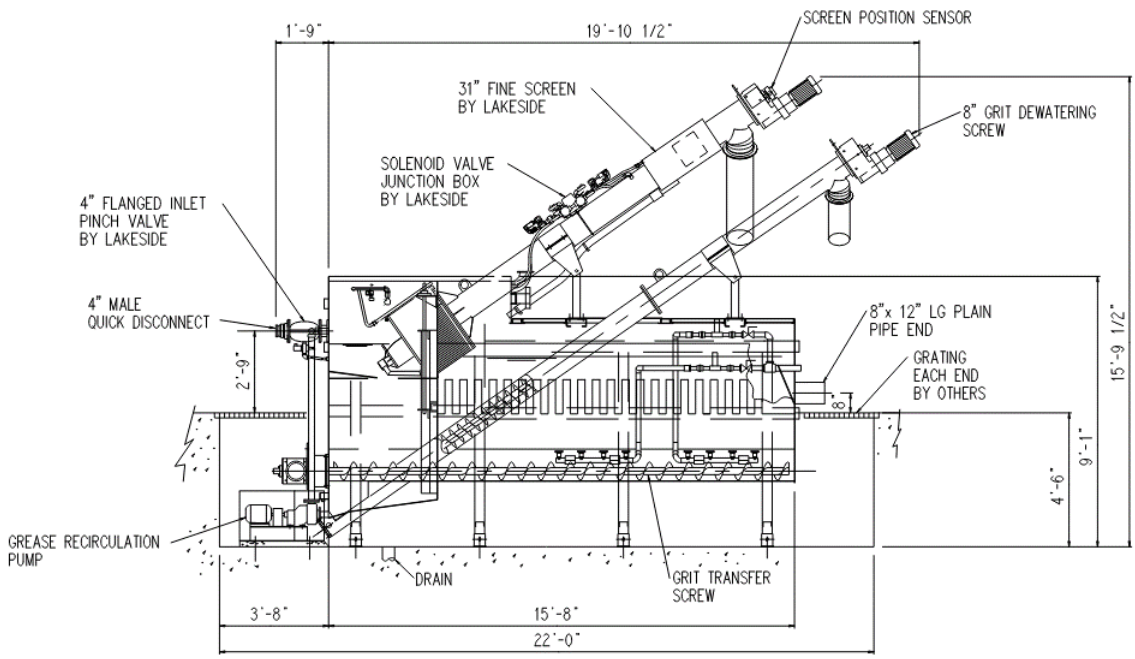

Figure 3-2. Lakeside Raptor Complete Septage Plant (model 31CPSAG)

Figure 3-3. Example Lakeside Raptor Complete Septage Plant

Figure 3-4. Lakeside RACS control station

Table 3-1. Lakeside Raptor Complete Septage Plant design summary

Parameter	Value
Septage system hydraulic capacity (gpm) (at 3% TS)	400
Septage system hydraulic capacity (gpm) (at 6% TS)	285
Electrical power characteristics (VAC/Hz/phase)	460/60/3
Motor and solenoid valve electrical classification	Non-hazardous
Electrical enclosure type	NEMA 4X AISI Type 304 stainless steel
Screen design summary	
Screen clean water hydraulic capacity (gpm)	2,061
Maximum upstream liquid level (in.)	13.75
Maximum clean water head loss (in.)	8
Bar spacing (in.)	0.25
Nominal screening basket diameter (in.)	31
Maximum allowable screen cleaning time (seconds)	5
Screen screw conveyor diameter (in.)	10
Screen speed reducer minimum service factor	1.56
Screen speed reducer minimum torque rating (in.-lb)	15,700
Screen speed reducer minimum thrust rating (lb_f)	5,800
Screen drive motor size (hp)	2
Grit auger drive motor size (hp)	2

Parameter	Value
Grease skimmer drive motor size (hp)	0.5
Maximum spray wash system flow rate (gpm)	25
Minimum spray wash system pressure (psig)	60
Screen lower wash system number of nozzles	7
Blower design summary	
Number of blowers (per unit)	1
Blower capacity (scfm)	9
Blower pressure (psig)	2.5
Blower motor size (hp)	2
Tank design summary	
Minimum tank width (ft)	5
Minimum tank length (ft)	15.67
Minimum tank height (ft)	9.08
Tank inlet pipe size (in.)	4
Outlet pipe size (in.)	8
Grease pump summary	
Minimum pumping capacity, gpm	20
Minimum discharge head, ft	30
Minimum drive motor size, hp	2

3.4.2 Associated Septage Equipment

Equipment used in support of the septage receiving and treatment improvements also includes the following:

- **Septage offloading/influent box:**
  - Control pinch valve
  - Ultrasonic level elements and float switch (overflow vault)
- **Septage piping:**
  - External rock trap
  - Inline pH sensor
  - Magnetic flow meter
  - Associated cement-mortar-lined ductile-iron piping and valves
- **Septage equalization tanks:**
  - Ultrasonic level elements
  - Motorized slide gates
  - Submersible mixers

- **Septage equalization wet well:**
  - Submersible pumps
  - Ultrasonic level elements and float switches
- **Septage equalization valve vault:**
  - Inline diaphragm seal with pressure element
  - pH sensor
  - Magnetic flow meter
  - Combination air release/vacuum valve
- **Septage interconnection to primary sludge:**
  - Pressure sustaining valve
  - Inline diaphragm seal with pressure element

3.4.3 FOG Equipment

This section describes selection of FOG equipment, including the FOG-screening system.

FOG-Screening System

FOG makes up a relatively small fraction of the overall wastewater flow in relation to the volume of screening and grit; however, FOG material typically requires a disproportionate amount of labor and resources when compared to other pretreatment processes. As a result, the selected FOG receiving and screening equipment is specially designed and intended for FOG and generally includes a screening system where FOG is gravity-fed or pressurized directly into a rotating screen basket and debris is captured on flights that carry it around the basket and deposit it into an auger trough, a washing zone, and then to a dewatering zone. The selected system for the FOG receiving and treatment improvements is the SAVECO VFA1200-DM SAVI BEAST. The BEAST system has a two-stage tank with radar liquid level sensing system, and a curved and sloped inlet section that directs flow into the screen cylinder. The hopper trough extends beyond the cylinder opening, which reduces screenings recycle. The screen uses a dual-drive system, which allows the screen basket and auger to operate independently, thus allowing the speed of the auger to be increased to provide faster debris removal while the speed of the screen basket can be decreased to improve capture efficiency. To mitigate the typical maintenance challenges associated with FOG equipment, the BEAST system does not use brushes inside the screen basket, which equates to the system catching fewer rags and debris. The screen is also supported at the drive end, which eliminates the need for support arms and further reduces ragging-related issues.

An isometric of the SAVECO VFA1200-DM SAVI BEAST system is shown below in Figure 3-5, screen features of the BEAST system are shown in Figure 3-6, and design criteria are listed in Table 3-2.

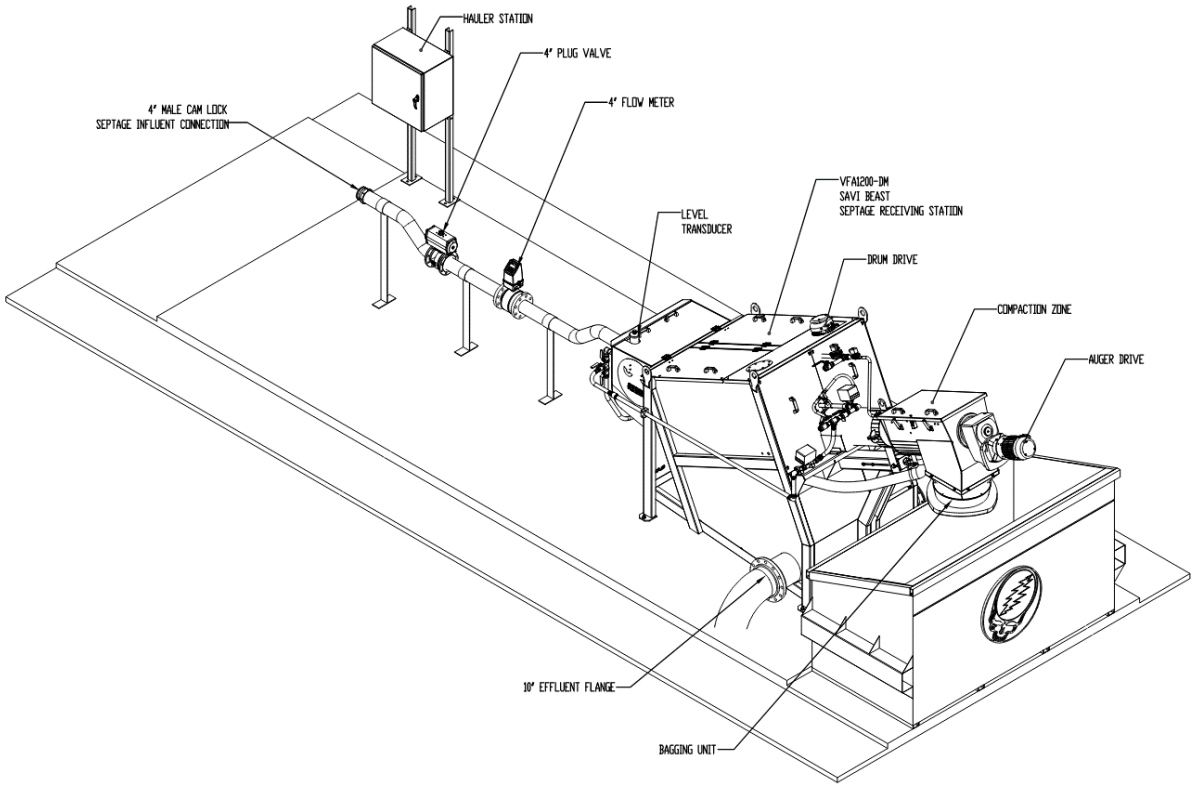

Figure 3-5. VFA1200-DM SAVI BEAST isometric

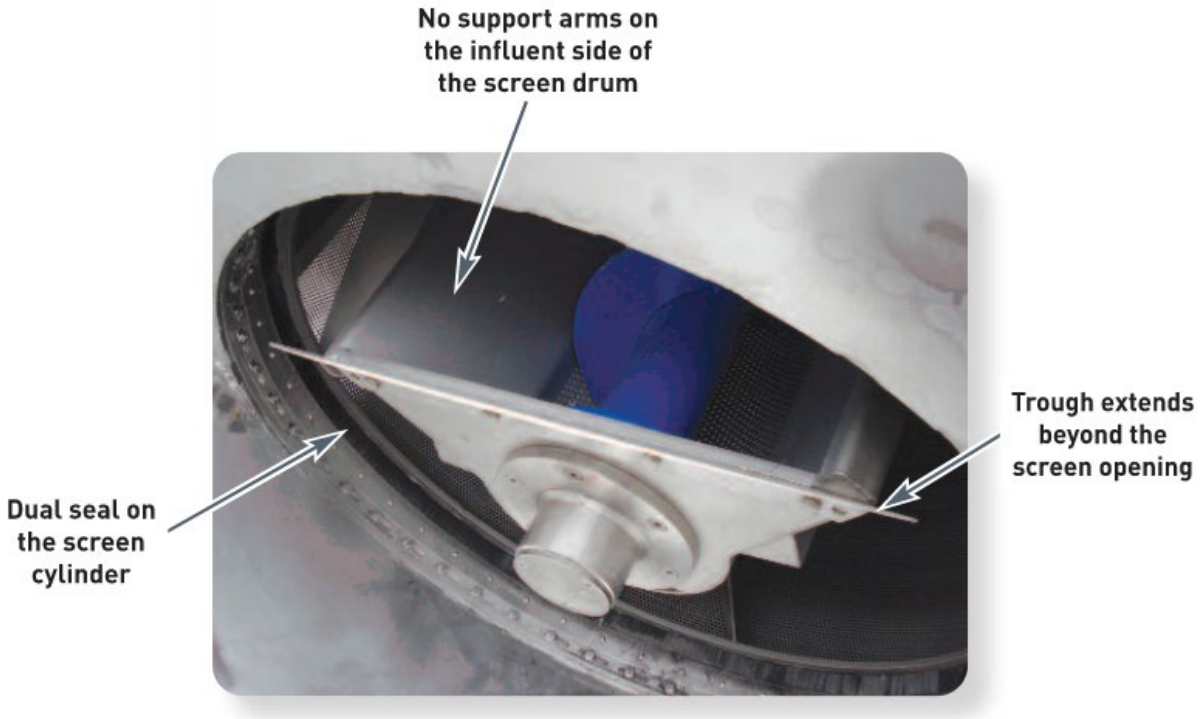

Figure 3-6. VFA1200-DM SAVI BEAST screen features

Table 3-2. FA1200-DM SAVI BEAST design summary

Parameter	Value
Septage system hydraulic capacity (gpm) (at 3%–4% TS)	660
Electrical power characteristics (VAC/Hz/phase)	460/60/3
Screen (type)	Perforated plate
Perforation size (mm)	6
Angle of inclination (degrees)	25
Cold water spray (gpm/psi)	45/40–60
Hot water spray (gpm/psi)	33/40 (min temp. of 125°F)
Drum screen drive motor (hp)	2
Auger drive motor (hp)	1.5
Controls	NEMA 4X

3.4.4 Associated FOG Equipment

Equipment used in support of the FOG receiving and treatment improvements also includes the following:

- **FOG offloading:**
  - Control pinch valve
- **FOG building:**
  - External rock trap
  - Magnetic flow meter
  - Inline grinder
  - Radar level element
  - FOG-receiving tank with ultrasonic level element and submersible mixer
  - Progressive-cavity FOG feed pumps
  - Inline diaphragm seal with pressure element
  - Associated glass-lined and heat-traced ductile-iron piping and valves

3.5 Septage and FOG Facility Layout

This section presents a septage and FOG facility layout, including a general layout; the septage influent box; septage screening, equalization, and pumping; and the FOG building.

3.5.1 General Layout

The new septage-receiving station and FOG building locations are proposed for the southeast corner of CKTP, as shown in Figure 3-7. A general layout of both facilities and conceptual site plan are provided in Section 12 and in Appendix H. The preliminary civil

design incorporates additional facility layout details and provides general piping routing and appurtenant structures that may not generally be shown in this section. The proposed area for the new septage-receiving station is located to the east of the existing septage-receiving station. The existing grade of this location is a relatively steep slope that will be cut, as required, to allow the influent box, septage EQ tanks, wet well, and valve vault to be buried. Because of the existing grades, a retaining wall may be required between the influent box and EQ tanks, as shown in Figure 3-11. The proposed area for the new FOG building location is on the south end of the existing grass island, to the north of the existing vactor decant facility and east of the headworks building. The general area of the proposed FOG building is combined with space that will become available following demolition of the existing septage-receiving station. This available space allows for expansion of the FOG facility if additional capacity is needed in the future, or if additional FOG treatment or technology is desired, similar to the packaged treatment system evaluated during the septage and FOG workshop that processes raw FOG to a biofuel precursor.

Equipment and plumbing drains from the FOG and Septage facilities, for use during washdown, equipment draining, or other maintenance activities, will be routed to the headworks or the EQ tanks to collect drainage when needed.

Figure 3-7. General septage and FOG facility layout

3.5.2 Septage Influent Box

At the septage offloading point, and upstream of the septage screening and degritting systems, septage haulers will gravity-offload through a 6-inch-diameter truck connection into an influent box with a 1- to 2-inch manual bar screen (final size to be determined [TBD] during detailed design), intended to collect large rocks and debris and protect the packaged screening and degritting equipment. The septage offloading point at the influent box structure will be accessed by septage haulers through a new road located on the upper level of the property that was recently acquired by CKTP. The influent box structure will include three separate vaults: two exterior vaults will be used for active discharging of septage, and the middle vault will be dedicated to overflows in the event that a septage hauler overcomes or clogs the bar screen and backs up the vault being used. Wash water will be located at multiple points in and around the influent box. A washdown header will be located inside each vault to provide an automatic washdown for the interior walls, bar screen, and sump of each vault, and three hose bibs will be provided so that the bar screen can be washed from above grade, and a general washdown of the surrounding area can be provided. Septage haulers will be required to clean the offloading area, influent box, and manual bar screen following a septage delivery. Access hatches for each vault will allow septage haulers to use a CKTP-provided rake and dumpster to clean rocks and larger material from the manual bar screen. As noted in Section 6.3, foul air will be collected from the influent box and a negative pressure will be maintained in each vault when the access hatches are closed.

Conceptual influent box isometrics, plans, and sections are shown below in Figure 3-8, Figure 3-9, and Figure 3-10. A septage influent box P&ID is provided on Drawing P-510.

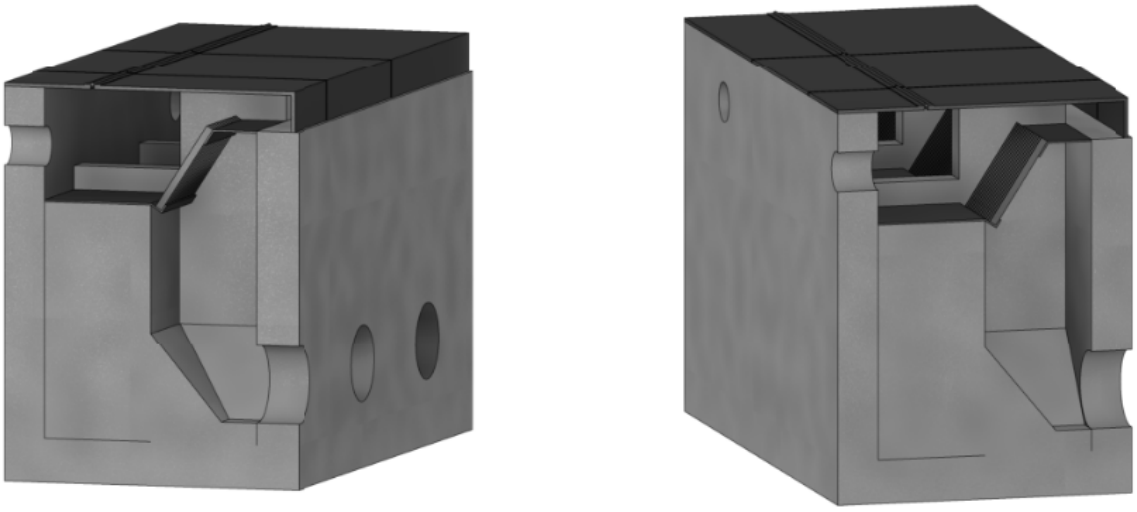

Figure 3-8. Septage influent box isometrics

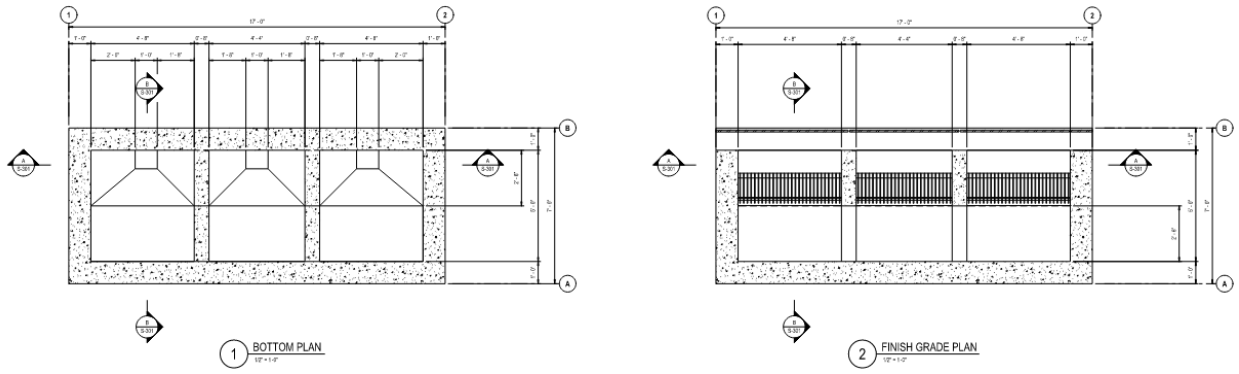

Figure 3-9. Septage influent box plans

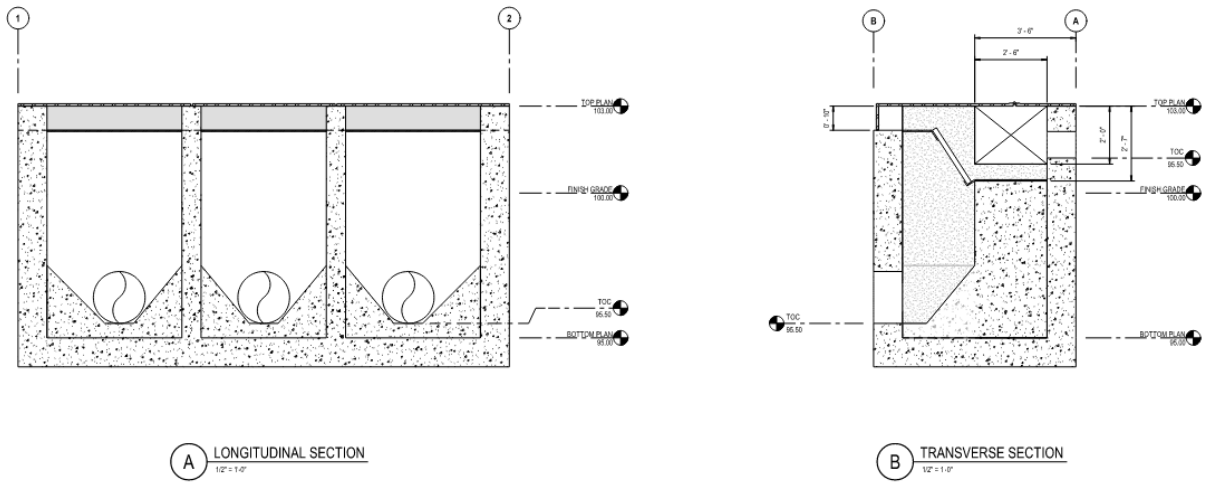

Figure 3-10. Septage influent box sections

3.5.3 Septage Screening, Equalization, and Pumping

As septage leaves the septage influent box, 6-inch-diameter cement-mortar-lined ductile-iron piping will convey flow from the two exterior vaults through a piping configuration that incorporates various plug valves that will allow septage to be routed to either of the screening systems and for flow to be metered from each septage hauler truck. Upstream of the screening system inlet, septage will flow through an external Type K rock trap and 4-inch magnetic flow meter and into the screening systems. A gravity bypass will allow for thickened septage and thickened biosolids to bypass the influent box and either go to the screening and degritting equipment, or directly into the septage EQ tanks.

Subsequent to screening and degritting, septage will be discharged into one of two 100,000-gallon septage EQ tanks. The proposed installation location for each screening system is on the roof of each septage EQ tank. Each tank will be equipped with washdown headers to clean the interior of the tank, and motorized mixers to ensure that a homogenous mixture is pumped to the new mechanical thickening equipment. Each septage EQ tank will include a motorized slide gate in the sump area of the tank that allows septage to flow into the septage EQ wet well. From the septage EQ wet well, septage will be pumped via submersible solids-handling pumps to the new mechanical

thickening equipment, or the headworks building, through 4-inch cement-mortar-lined ductile-iron piping.

The submersible septage pump discharge piping will be routed through the EQ valve vault to an interconnection with the new PS piping to provide the flexibility of mixing septage with PS, or sending only septage, to the new mechanical thickeners. Because of the existing site grade and elevations of the proposed infrastructure, the discharge point of the septage piping is below the septage EQ wet well operating level, which creates the potential for column separation, or a break in the system hydraulic grade line, between each septage pumping cycle. At the current proposed infrastructure locations, this condition results in a ± negative 1 foot of static head on the septage pumping system and may also have the potential to allow the accumulation of air in the piping system, through air/vacuum valves or combination air valves, and subsequently allow that air to transfer to the new mechanical thickening equipment when PS is being pumped while the septage pumps are not in operation.

To mitigate this potential operational challenge, a pressure-sustaining valve is being proposed at the interconnection to the new PS piping. The pressure-sustaining valve would allow a specific minimum pressure for the septage pumps to be maintained and allow for efficient pump performance across all pumping scenarios. A specific type of pressure-sustaining valve that may be considered for this application is an electric-actuated control pinch valve with an elastomer sleeve. The elastomer sleeve would be the only part of the valve that is in contact with screened septage. During a septage pumping operation, and as pressure begins to build on the upstream side of the pressure-sustaining valve, the valve would open to reduce the upstream pressure down to a pr-determined pressure set point. As pressure continues to build, the valve would open further. At the end of a pumping operation, and as pressure decreases upstream of the valve, the valve would gradually close to maintain a predetermined minimum pressure set point. This type of pressure-sustaining valve does not require an air compressor to operate like a traditional plunger-type pressure-sustaining valve and has been used in sewer force main applications for several years.

Layout sections of the septage-receiving station and EQ tanks, including an isometric, are shown below in Figure 3-11, Figure 3-12, Figure 3-13, and Figure 3-14. Preliminary piping is shown on the Civil Plan sheets in Appendix H, and septage screening, EQ, and pumping P&IDs are provided on Drawings P-510 through P-513 in Appendix F.

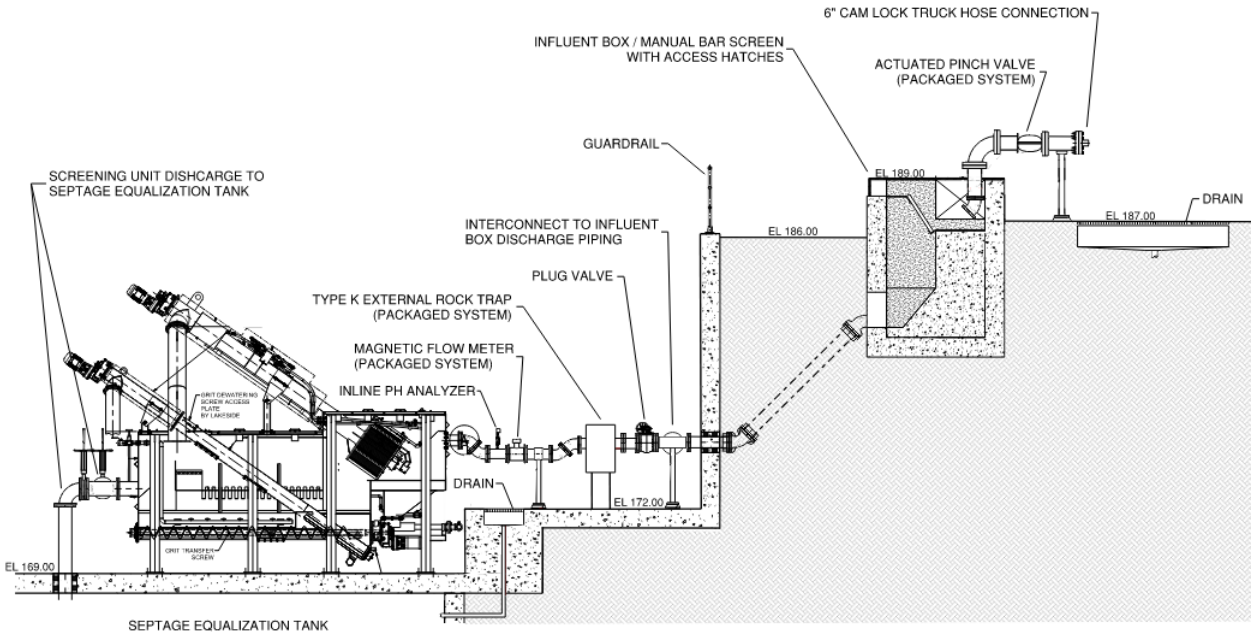

Figure 3-11. Septage-receiving station layout

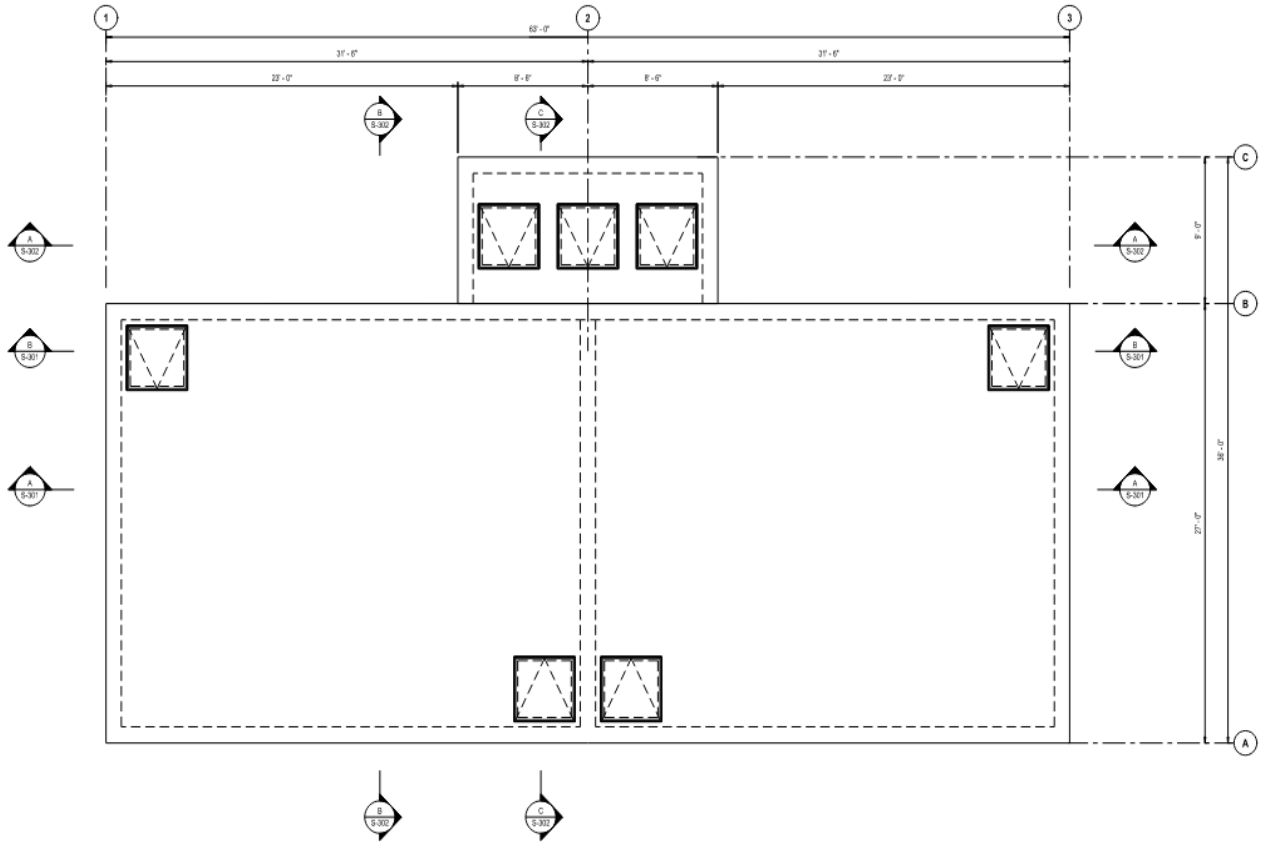

Figure 3-12. Septage EQ tank roof plan

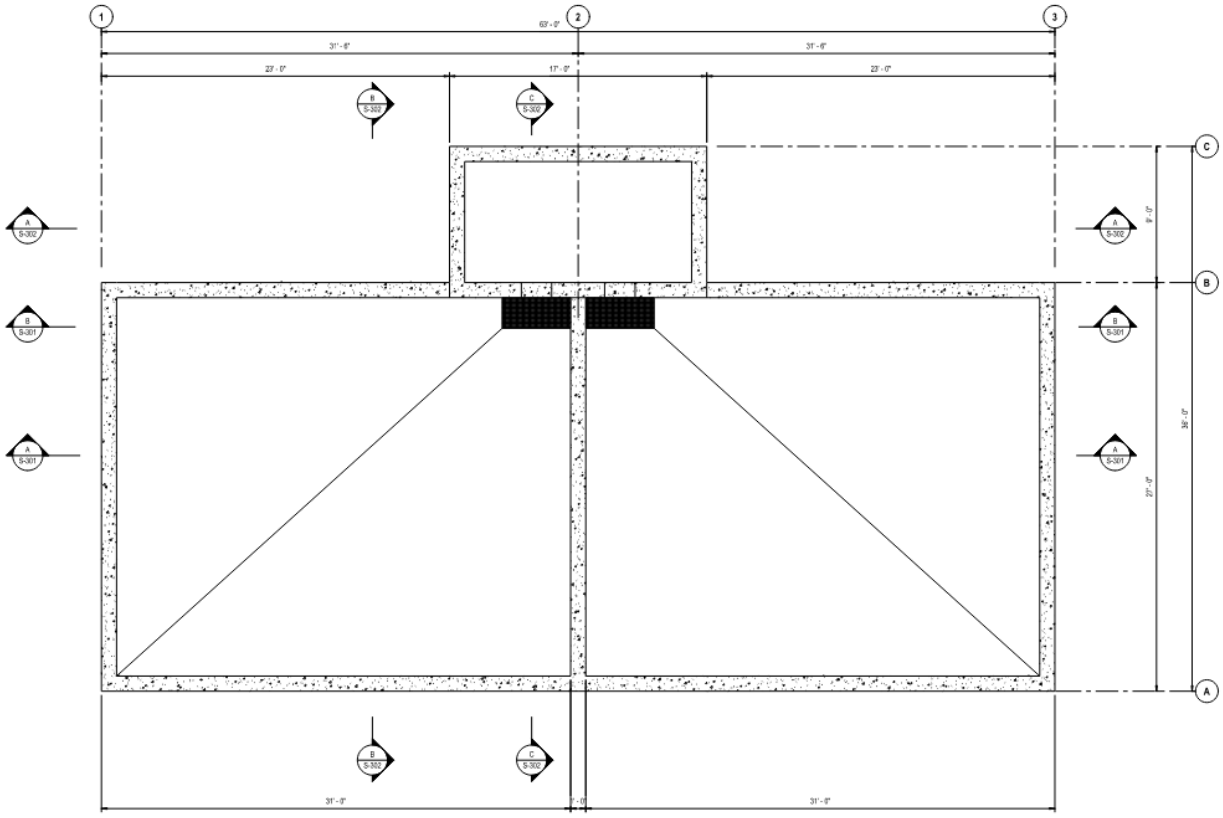

Figure 3-13. Septage EQ tank foundation plan

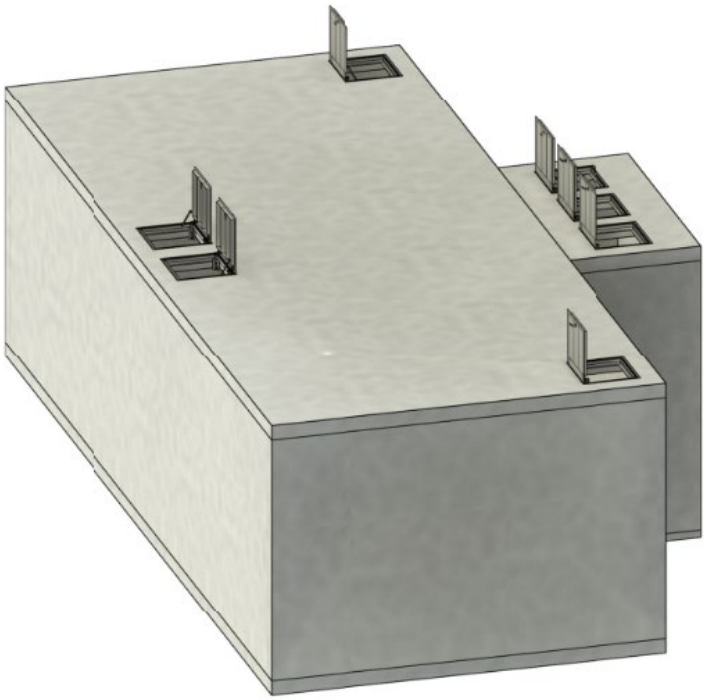

Figure 3-14. Septage EQ tank isometric

3.5.4 FOG Building

The new FOG building will house all FOG-related equipment and include an electrical room, utility room, and FOG-handling room. FOG haulers will access the new FOG building offloading location from the service road through CKTP, similar to how haulers currently access the existing septage-receiving station. Offloading will include gravity and pressurized discharging of FOG through a 4-inch truck connection with an exterior-mounted control station that will provide secure keycard access and record time, volume, pH, etc. FOG will be conveyed through glass-lined and heat-traced ductile-iron piping, an external rock trap with bypass, a magnetic flow meter, and into the FOG screening system. Screened FOG will discharge through a 10-inch-diameter gravity line from the FOG screening system into a 7,500-gallon FOG-receiving tank with submersible mixer. Progressive-cavity FOG feed pumps will convey FOG from the FOG-receiving tank to a specific digester(s), discussed in Section 3.7.

Bypass FOG piping will include a connection between the magnetic flow meter and inlet to the FOG screening equipment to allow FOG to gravity bypass to the FOG-receiving tank. As part of the gravity bypass, and in the absence of using the FOG screening equipment, FOG is conveyed through the FOG bypass piping and an inline grinder prior to discharging into the FOG-receiving tank.

The BOD for the sizing of the FOG-receiving tank is to provide adequate storage volume to completely offload two FOG hauler trucks, typically ranging between 2,500 and 3,500 gallons per truck, which provides CKTP staff the flexibility to not immediately feed FOG into the FOG-feed tank and digesters, if desired. A small amount of additional tank capacity is incorporated into the sizing of the FOG-receiving tank to ensure that the tank is allowed to operate as intended while maintaining sufficient freeboard to prevent overflows. This additional tank capacity will also allow the residual grease that is collected from the septage-screening equipment to be pumped to the FOG-receiving tank and combined with FOG that is offloaded from FOG haulers. Due to the heavy maintenance typically associated with FOG, hot water will be provided throughout the FOG building. Hot water will be routed to all hose bibs, the external rock trap, and to dedicated hot water flush connection points upstream of the flow meter and inlet to the screening equipment, downstream of the screening equipment discharge, a direct connection to the FOG-receiving tank, upstream of the FOG feed pumps, and to the FOG-feed pump recirculation piping. Hot spray water will also be routed to the screening equipment manufacturer’s connection points at the screen inlet, drum drive, and compaction zone. The electrical room will house all FOG-related electrical equipment and the utility room will house the hot water heaters for all hot water flushing and spray requirements.

Conceptual layouts, including plan and section views of the FOG building, are shown below in Figure 3-15, Figure 3-16, and Figure 3-17. FOG P&IDs are provided on Drawings P-520 through P-521 in Appendix F.

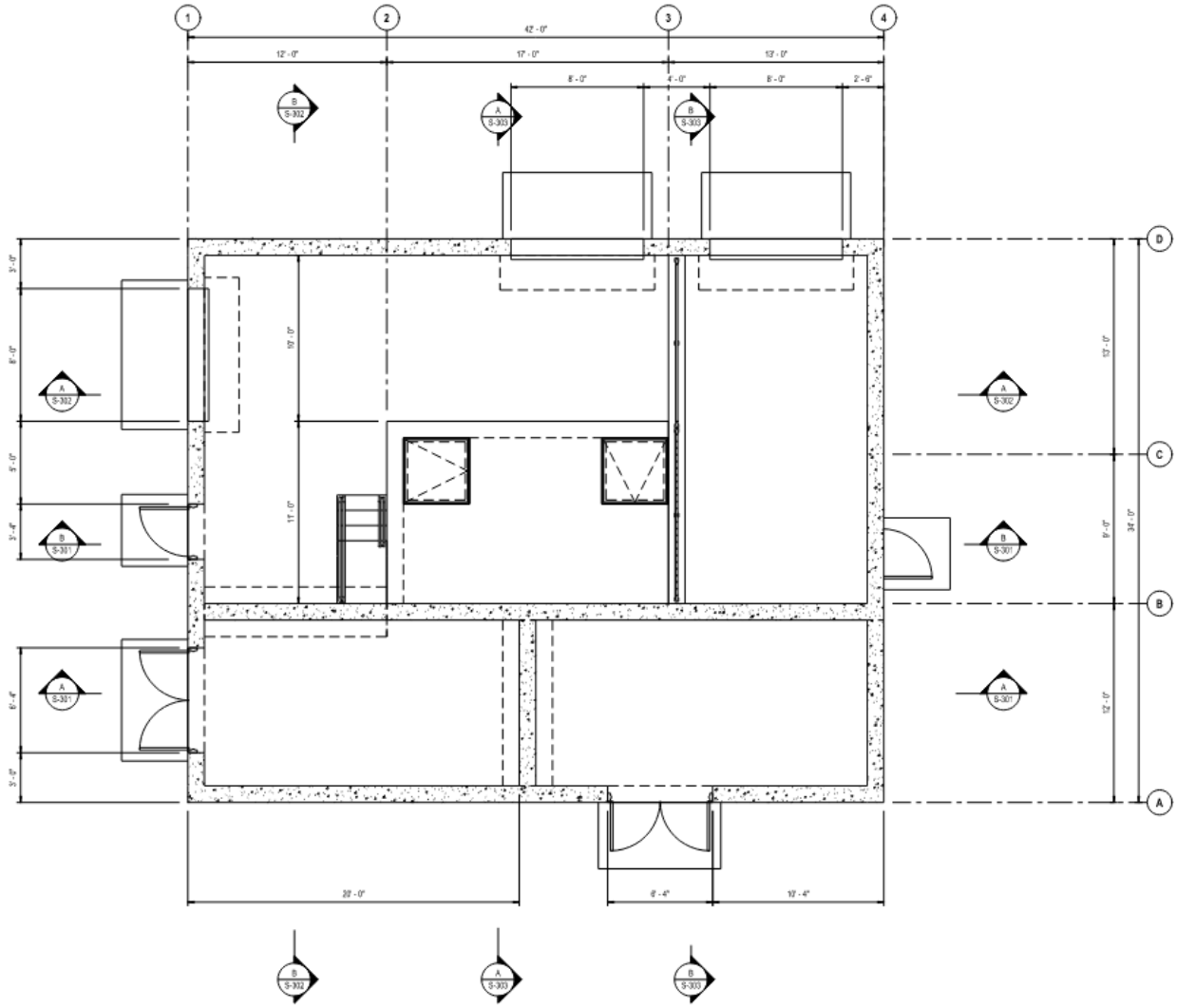

Figure 3-15. FOG building first-floor plan

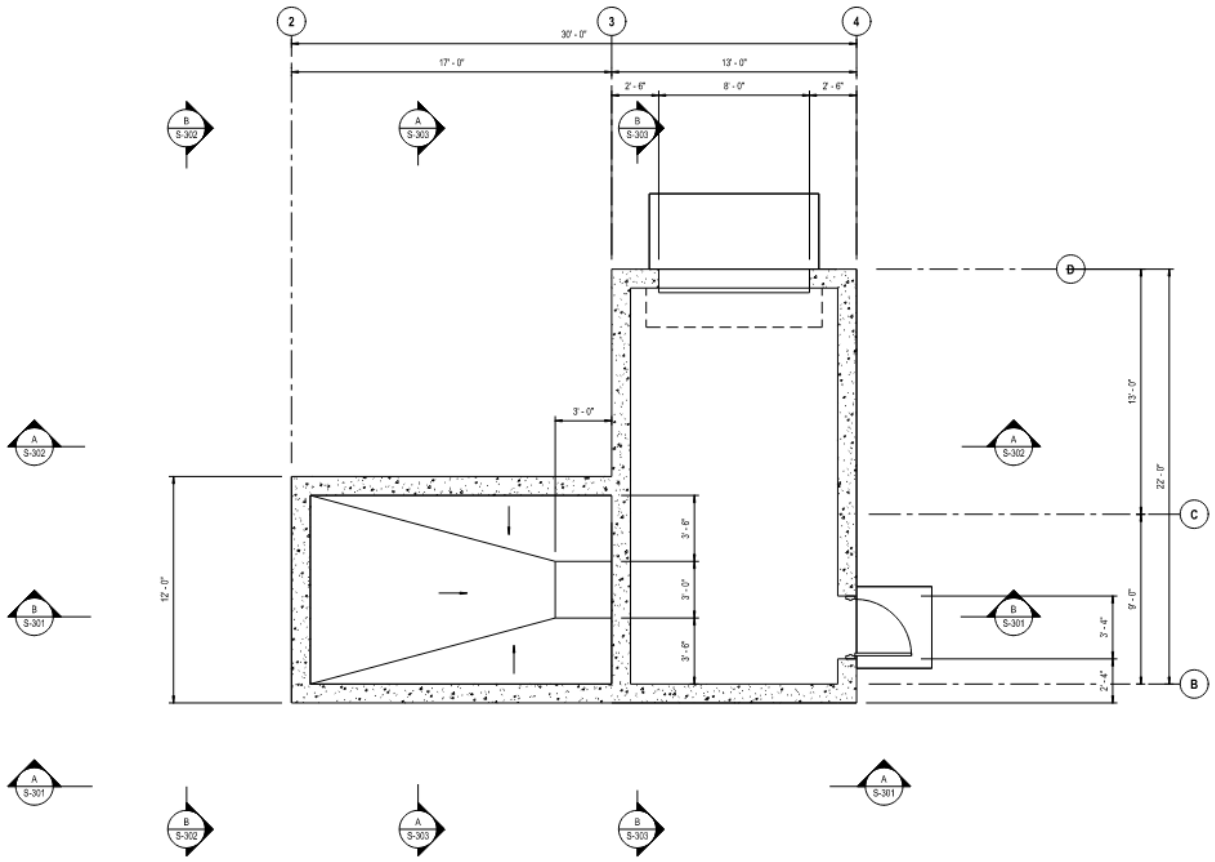

Figure 3-16. FOG building lower-floor plan

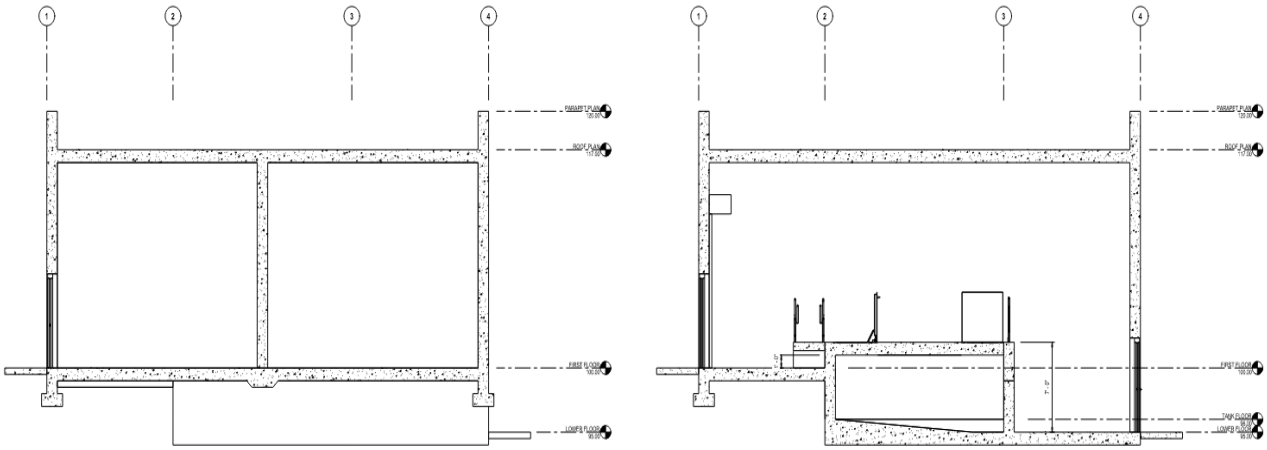

Figure 3-17. FOG building sections

3.6 Septage and FOG System Operation

The following sections describe the process operation recommendations for the septage and FOG systems. Further control information is summarized in Section 11.

3.6.1 Septage

Septage offloading will remain similar to how septage haulers currently discharge into the existing septage-receiving station; however, all septage offloading will be by gravity in lieu of pressurized offloading. Septage haulers will connect to a 6-inch-diameter truck connection and offload their septage delivery into the septage influent box. It is expected that the hauler will monitor septage during the offloading process and throttle the discharge accordingly to avoid clogging the manual bar screen. Subsequent to offloading, septage can be routed to one or both septage-screening systems for fine screening, grit removal, and residual grease removal, and can then be routed to one or both EQ tanks.

Septage Feeding

While the new mechanical thickening equipment is efficient, the desire is to minimize, as much as practicable, additional dilution water included with the septage receiving and treatment process that gets conveyed to the thickening equipment. It is anticipated that washdown water from the septage influent box, the screening system manufacturer's required wash water, and washdown water for the septage EQ tanks will be the only additional water incorporated into septage. In addition to minimizing wash water, it is desired to provide as consistent flow and solids concentration as practicable to the new mechanical thickening equipment. Although septage will mix with PS prior to thickening, consistent septage flow and solids concentration will reduce the potential for mechanical thickening upset and the need to make polymer adjustments.

Brief descriptions of basic approaches to the operational strategy for the EQ tanks are listed below.

Equalization Feed Option 1: Septage-Screening System/One Equalization Tank

This operational scenario anticipates that one of the screening systems will be used in conjunction with one of the two septage EQ tanks. As septage flow is received, it is routed to the screening system and discharged into the selected septage EQ tank.

Equalization Feed Option 2: Septage-Screening Systems/Two Equalization Tanks

This operational scenario anticipates that both screening systems will be used in parallel along with one or two of the septage EQ tanks. As septage flow is received, it is routed to both screening systems and discharged into one or both tanks. This scenario does not provide for redundancy, making it a less desirable operational scenario.

Septage Equalization Discharge Strategies

Under each operational scenario, septage can be pumped and conveyed to the new mechanical thickening equipment through the following methods:

- **EQ tank level hold**: Septage is received, screened, and discharged into an EQ tank up to a certain level set point, and pumping from the wet well is controlled by maintaining that predetermined level set point throughout an operational window or duration. This operating method does not take advantage of the EQ storage volume

and results in intermittent slugs of septage being pumped to the new mechanical thickening equipment, creating the potential for polymer dosing variability and inconsistencies.

- **Fill and draw**: Septage is received, screened, and discharged into an EQ tank, and the submersible pumps operate based on various level set points (e.g., Pump ON, Pump OFF, etc.) within the tank. This operating method uses a predetermined operational volume within the tank and does not take advantage of the available EQ storage volume, resulting in inconsistent septage flows to the new mechanical thickening equipment.
- **Set volume discharge**: Septage is received, screened, and discharged into an EQ tank, and as it reaches a predetermined set point, CKTP staff calculate a set volume and/or pumping rate of septage to send to the new mechanical thickening equipment for that given operational window, day, or duration. While a steady rate of septage is being pumped from one EQ tank, the second EQ tank is being actively used to receive screened septage from septage haulers**.** This operating method allows for a consistent feed of septage over a given period, providing for more favorable operating parameters for the new mechanical thickening equipment.

Because of the desire to feed consistent septage flow and solids concentration to the new mechanical thickening equipment, it is recommended to use a set volume discharge operating method, when available.

3.6.2 FOG

FOG haulers will have the ability to either gravity or pressurize offload at the FOG building truck connection. Once FOG is metered and screened, it will flow by gravity into the FOG-receiving tank. The FOG-receiving tank will include a submersible mixer to allow screened FOG to be homogenized before it is pumped directly to the digesters.

As part of the FOG screening equipment, hot and cold spray/wash water is used. Hot and cold spray/wash water will operate on cycle timers, and when the FOG screening drum is in operation. It is important to note that the frequency and runtime for hot and cold water during the screening process is highly dependent upon truck size, offloading time, and subsequent throughput of FOG through the screening equipment, and will vary significantly depending on the type of FOG, solids concentration, and temperature. Optimization for the FOG screening equipment and hot- and cold-water timer settings will begin during startup and commissioning, and potentially continue for a period as the overall FOG screening and feeding operation is fine-tuned. As part of the preliminary digester design, projected FOG flows were increased by approximately 20 percent to account for hot and cold spray/wash water that is added through the FOG screening process. Estimated hot- and cold-water runtimes, which generally align with the FOG screening manufacturer’s factory settings, and demands are listed below:

- **Hot water spray drum:** 8–10 minutes at 33 gpm
- **Hot water compaction spray:** 1–2 minutes at 33 gpm
- **Cold water main spray to drum wash:** 5–7 minutes at 45 gpm
- **Cold water tank flush:** 10–15 seconds at 45 gpm

As a result of the extremely variable nature of FOG and the lack of having no real "standard," the design of the FOG screening system will acutely focus on minimizing, as much as practical, the addition of water to FOG during the screening process to reduce the potential adverse impacts to the digestion process and HRT.

3.6.3 Future FOG System Operation

The FOG receiving and treatment improvements described in the previous sections will implement a process to receive, screen, and feed FOG into the digesters at a controlled rate that meets the base design requirements for the FOG building. However, it is understood that over time and as the frequency of FOG deliveries and volume increases, there may be a need for additional infrastructure to provide a means of decanting FOG to remove excessive water prior to digestion or to provide additional FOG treatment to process raw FOG to a biofuel precursor. Therefore, the proposed FOG building is not only intended to meet the base design requirement, but also to serve as the pretreatment step of a future FOG and scum thickening facility.

A future FOG and scum thickening facility could include equipment to provide for FOG and scum co-thickening, heated tanks, and associated equipment designed to decant gravity-separated FOG water and settleable solids (food debris, heavier solids, etc. that make it through the screening equipment) prior to pumping thickened FOG to the digester(s), or it could include specialty vendor equipment or technology to process raw FOG to a biofuel precursor.

3.7 Septage and FOG Pumps and Mixers

The following sections provide a summary of the pump sizing and mixer selections for the septage and FOG systems.

3.7.1 Septage Pumps

The septage pumps will be Flygt Concertor submersible-type pumps with an adaptive N-impeller operated by a fully integrated VFD and control system, and located in the EQ wet well to convey septage from the EQ tanks to either the new thickening equipment or headworks building. Two septage submersible pumps, with space for a third future pump, will be sized to approximately 125 gpm at 35 feet total dynamic head (TDH) with 5.5 hp motors, similar to a Flygt Concertor XPC N100-4050. Discharge piping for the septage submersible pumps will be installed through the EQ wet well and EQ valve vault, and then routed northwest to the PS and septage thickening building, and west to MH 11, upstream of the headworks distribution channel. Septage pump design criteria are shown in Table 3-3 below.

3.7.2 Septage Mixers

The septage mixers will be Flygt submersible compact mixers operated by a VFD with one submersible mixer located in each EQ tank and installed with guide rails to facilitate future maintenance requirements. The submersible mixers will ensure that septage is homogenized prior to being pumped to the new mechanical thickening equipment, and to prevent sedimentation in each tank. Septage mixer design criteria are shown in Table 3-4 below.

Table 3-3. Septage submersible pump design criteria

Parameter	Value
Pump type	Submersible
Fluid	Septage
Design flow rate range (gpm)	125
TDH (ft)	35
Nominal horsepower	5.5
Max pump speed (rpm)	1756
Adjustable speed	Yes

Table 3-4. Septage submersible mixer design criteria

Parameter	Value
Mixer type	Submersible
Fluid	Septage
Motor size (hp)	10
Velocity gradient, G (sec -1)	5 (assumes TS of 2.10% as determined from recorded average from 2021–2022)
Propeller diameter (in.)	14.5
Propeller speed (rpm)	Variable (up to 800)

3.7.3 FOG Feed Pumps

The FOG feed pumps will be a progressive-cavity-type pump operated by a VFD and located in the lower level of the FOG building and will pull FOG from the FOG-feed tank and discharge to the digesters. The FOG feed pumps will be sized to provide approximately 50 gpm at 150 pounds per square inch differential (psid), with 15-horsepower (hp) motors. Discharge piping for the FOG feed pumps will be routed north to the existing and new digester control building. FOG feed pump design criteria are shown in Table 3-5 below.

3.7.4 FOG-Receiving Tank Mixer

The FOG-receiving tank mixer will be a Flygt submersible compact mixer operated by a VFD and installed with guide rails to facilitate future maintenance requirements. The submersible mixer will ensure that FOG is homogenized prior to being pumped to the FOG-feed tank, primarily when FOG decanting is not taking place. FOG mixer design criteria are shown in Table 3-6 below.

Table 3-5. FOG feed pump design criteria

Parameter	Value
Pump type	Progressive cavity, min 2-stage (TBD)
Fluid	FOG
Design flow rate (gpm)	50

Parameter	Value
TDH (psi, differential pressure)	150
Nominal horsepower	15

Table 3-6. FOG submersible mixer design criteria

Parameter	Value
Mixer type	Submersible
Fluid	FOG
Motor size (hp)	10
Velocity gradient, G (sec -1)	5 (assumes TS of 2.0%)
Propeller diameter (in.)	14.5
Propeller speed (rpm)	Variable (up to 800)

4 Solids Thickening

Solids-thickening improvements will be implemented for PS, septage, and WAS before digestion. Though there is an existing WAS rotary-drum thickener (RDT), a redundant unit was not installed as part of prior solids improvements, so CKTP staff requested that redundancy for WAS thickening be included as part of this project. After evaluating thickening streams as described in Section 2.2, various thickening technologies were evaluated to ultimately replace the existing GTs. A workshop with CKTP staff was conducted to confirm design flows and loads and elect a preferred thickening technology. Upon technology selection, final thickening equipment design criteria and performance requirements were determined. This section describes the thickening technology evaluation, workshop results, equipment selection, and thickening design criteria.

4.1 Thickening Technology Evaluation, Selection, and Performance Testing

Various thickening technologies were evaluated leading up to a workshop with CKTP on July 24, 2023, where evaluation findings were presented and, ultimately, a preferred technology was selected for the project. The following thickening technologies and manufacturers were considered to replace the existing GTs:

- **Centrifuge thickeners:** Centrysis
- **Disc thickeners:** Huber
- **Rotary-drum or screw thickeners:** FKC

4.1.1 Thickening Technology Evaluation

In discussion with various thickening equipment representatives and vendors, the following manufacturers, technologies, and models were evaluated. Huber recommended the use of the rotary screw thickener as compared to a disc thickener, so disc thickeners were no longer considered in the evaluation.

- **Centrisys centrifuge:**
  - THK 350
  - THK 600
- **Huber rotary screw thickener:**
  - S-Drum Size 3L
  - S-Drum Size 4L
- **FKC RDT:**
  - RST-S630x2000L
  - RST-S630x3000L
  - RST-S775x3600L

Vendors provided equipment sizing, operational metrics, budgetary cost estimates, and other information based on preliminary design flows and loads, and operational criteria provided by HDR. HDR evaluated vendor information to determine thickener performance, operational requirements, and estimated life-cycle cost for various operational approaches such as PS and septage co-thickening.

4.1.2 Thickening Technology Selection and Performance Testing

Evaluations for each technology were summarized in a set of fact sheets and a presentation delivered to CKTP staff. CKTP staff selected the FKC RDT technology for the following reasons:

- At a nearby WWTP, an FKC RDT technology has been co-thickening PS and septage successfully for a couple of years. Co-thickening is a priority for CKTP, so this capability was preferrable. Other technologies had little or no experience or local experience thickening septage or co-thickening PS and septage.
- FKC is headquartered relatively close to CKTP (about a 1.5-hour drive), allowing for prompt service in the form of preliminary equipment testing, ongoing maintenance, parts replacement, etc. Other technology manufacturers are not located as closely to CKTP.
- To complement the points above, preliminary life-cycle cost estimates for FKC equipment were less than other technologies.

Appendix B includes the workshop fact sheets, meeting minutes, and presentation as a record of the thickening equipment evaluation and selection. Final equipment selection and sizing is described in Section 4.3.

4.1.3 FKC Performance Testing

After the workshop where FKC thickening equipment was selected, FKC performed thickener performance testing to determine thickening potential of PS, septage, and WAS. Table 4-1 summarizes testing results while Appendix E includes data provided by FKC. Testing results indicate that co-thickening of PS and septage can accomplish a TS of 6 percent whereas WAS thickening can accomplish a TS of 3.5 to 4.5 percent.

Table 4-1. Performance testing results summary

Parameter	PS			Septage			Combined[a]			WAS		
	Avg	Min	Max	Avg	Min	Max	Avg	Min	Max	Avg	Min	Max
TS (%)	1.17	0.37	1.98	0.31	0.18	0.59	0.49	0.30	0.69	0.41	0.35	0.47
Ash (%)	12.8	11.1	14.8	32.1	25.4	36.2	22.6	16.6	33.9	24.6	22.1	27.3
Fiber content (150 mesh)	0.442	0.255	0.537	0.113	0.001	0.206	-	-	-	None	None	None
Polymer dosage (lb/dry ton active)	10	5	13	20	18	23	14	6	21	16	14	18
RST effluent TS (%)	6.56	6.05	7.42	6.95	6.39	7.62	7.39	6.70	7.98	4.05	3.53	4.57

a. 75% PS and 25% septage by volume.

4.2 Thickening Flows, Loads, and Operation

Thickener design flows and loads determined the required equipment sizing, recommended operational approach, and proposed equipment layout. Though Section 2.2 summarizes daily average and MM flows and loads for the thickening streams in question, additional operational and design criteria will determine thickening equipment flows and loads. To accommodate flexible operations and variations in flow and load variability, the following assumptions were made for each waste stream in development of thickening equipment design criteria:

- **PS:**
  - Preferred continuous operation of PS thickening equipment, e.g., 24 hours per day, 7 days per week.
  - Currently PS is pumped at 75 gpm continuously, which results in a flow of 108,000 gpd. A TS of 0.58 percent could be assumed to meet current estimated PS loads. If this TS is maintained for future conditions, thickening units are more hydraulically limited but if PS was thickened more in the clarifiers, it would provide more thickener capacity in the future.
  - During preliminary thickening equipment testing, HDR requested that primary clarifiers be operated with a larger blanket to promote thickening of the PS. From preliminary reports, this operational change was not a concern to CKTP staff. Test results indicate that the operational changes allowed for an increase in TS from 0.57 percent to 1.77 percent. Based on these successful operational changes, it is recommended that for future conditions the primary clarifiers be operated to promote a PS TS of at least 1.25 percent. This operational approach will likely improve thickening efficacy, decrease polymer consumption, and increase thickening equipment hydraulic throughput capacity for future conditions.
- **Septage:**
  - Preferred thickening of septage to occur in a shorter period during operating hours, e.g., 14 hours per day, 5 days per week.
  - An EQ basin for received septage will allow for operational flexibility for co-thickening of PS and septage.
  - Assumed water:septage dilution of 2:1 by volume to account for added water during septage-receiving processes.
  - Average daily flow and load increased as compared to values in Section 2.2.3 because of omission of zero values on weekends. New 5-day averages provide more representative estimates of daily maximums and thickening equipment performance requirements.
  - For typical thickening design and operation, the 2042 MM values were assumed to be the 2042 AA design values per discussion in Section 2.2.3. To evaluate maximum thickener performance for atypical operational requirements, the facility plan 2042 MM values were assumed.

- **WAS:**
  - Preferred to have an available unit for redundant WAS thickening on a continuous basis, e.g., one unit can thicken was for 24 hours per day, 7 days per week.
  - Secondary clarifiers can be operated with a thicker blanket to create a thicker WAS to promote lower hydraulic flows with higher solids loading, allowing for more efficient use of redundant thickening equipment. The TS discrepancy between current and future design values mentioned in Section 2.2.2 was included because previous work (HDR 2022) has recommended to thicken WAS via an increase in mixed liquor suspended solids (MLSS) concentration (aerobic solids retention time [SRT]) and improve BNR performance. This is expected to be the long-term operation of MLSS in the aeration basins.

All modeled flow and load scenarios assume that three RST-775X3600L units are available to thicken with two in operation and one available for redundancy. Section 4.3 describes thickener characteristics and layout in detail. Table 4-2 and Table 4-4 summarize evaluated flow and load scenarios and associated evaluation results for co-thickened septage and PS and WAS for current, future, minimum turndown, and maximum thickener capability conditions. Table 4-3 and Table 4-5 summarize design flows, loads, and operational parameters for all scenarios. Key takeaways for each condition are included to elaborate on qualitative characteristics of each condition and operational scheme. Footnotes highlight assumptions or intricacies of the analysis. Generally, the units are limited based on the hydraulic loading rate as compare to the solids loading rate.

Table 4-2. Thickener analysis scenarios and results for PS and septage

Scenario	Description
Turndown	Turndown conditions evaluate thickener minimum turndown requirements against proposed flows and loads as the thickener needs a minimum flow and load to work. This scenario considers “worst-case” conditions where no septage is being processed and PS is especially thick. Opposite to other evaluated scenarios, this scenario lists maximum required operating hours needed to maintain a flow and load above minimum turndown requirements. This scenario describes operational adjustments required for a unique “lowest flow and load” situation.
2023 average	2023 average conditions evaluate thickener performance under current septage and PS flows and loads. A key part of this assumption includes the dilute nature of the PS. If primary clarifiers are operated to promote a higher PS TS, flow and required operating hours decrease significantly as shown in 2028 average conditions. The higher PS flows in turn require more time to process septage flows and loads.
2028 average	2028 average conditions evaluate thickener performance under 2028 septage and PS flows and loads. A key part of this assumption includes the thicker nature of the PS. The thicker PS allows septage to be processed quicker than in 2023 despite increased flows and loads.
2042 adjusted MM	2042 MM conditions evaluate thickener performance under 2042 MM septage and PS flows and loads. This design condition is key to ensuring that thickeners can perform at a high level for an extended period (typically 1 month). A key part of this assumption includes use of 2042 AAFs for 2042 MM septage flow and load. This approach was selected per CKTP advisement as described in previous sections. Additionally, if septage is processed 22 hours per day, 7 days per week, and PS is processed 24 hours per day, 7 days per week, one unit can process all flows and loads for this design condition.
2042 peak design	2042 peak conditions evaluate maximum thickener performance under worst-case PS flows and loads. This design condition is meant to evaluate max thickener performance and compare those conditions to observed flow and load trends. PS is assumed to be thicker, but slightly more dilute than preferred to conservatively estimate PS hydraulic flows. Septage flows and loads are then increased to the maximum amounts allowed by the thickeners to understand what peaking factors would be seen under those conditions. Peak conditions are ultimately composed of a 2042 Peak:AA solids peaking factor of 6.3 and a liquid peaking factor of 1.6 at a TS of 4.8%. As expected, and as indicated in the peaking factor values, the thickening equipment is primarily hydraulically limited. In evaluating recorded data, the maximum solids peaking factor experienced was about 3.7 with an associated liquid peaking factor of 1.5 and TS of 5.4%. The maximum liquid peaking factor experienced was about 2.9 with an associated solids peaking factor of 2.28 and TS of 1.8%. Evaluation of these recorded events would suggest that a solids peaking factor of 6.3 would not be likely but a liquid peaking factor of 1.6 with an associated TS of ~5.0% is likely for peak day conditions. Though peak conditions are generally unlikely, the proposed equipment and layout would perform well for the estimated worse-case conditions.

Table 4-3. Thickener flow, load, operation, and other criteria for PS and septage thickening

Scenario	Turndown	2023 average			2028 average			2042 adjusted MM			2042 peak design		
Stream	Primary	Septage	Primary	Combined	Septage	Primary	Combined	Septage	Primary	Combined	Septage	Primary	Combined
Year	2023	2023	2023	2023	2028	2028	2028	2042	2042	2042	2042	2042	2042
Condition	AA	AA	AA	AA	Adjusted AA	AA	Adjusted AA	Adjusted MM	MM	Adjusted MM	Peak	Peak	Peak
Flow (gpd)	31,519	23,000	125,800	148,800	28,000	96,600	124,600	52,100	110,400	162,500	143,500	110,400	253,900
Load (lb/d)	5,310	4,100	5,300	9,400	5,000	6,100	11,100	9,300	9,300	18,600	58,700	9,300	68,000
S.G.	1.01	1.02	1.01	1.02	1.02	1.01	1.02	1.02	1.01	1.02	1.02	1.01	1.02
% TS	2.00%	2.10%	0.50%	0.75%	2.10%	0.75%	1.05%	2.10%	1.00%	1.35%	4.81%	1.00%	3.16%
Dilution (water:XX)	-	2:1	-	-	2:1	-	-	2:1	-	-	2:1	-	-
Diluted % TS	2.00%	0.70%	0.50%	0.57%	0.70%	0.75%	0.73%	0.70%	1.00%	0.83%	1.60%	1.00%	1.49%
Diluted flow (gpd)	31,519	69,000	125,800	194,800	84,000	96,600	180,600	156,300	110,400	266,700	430,500	110,400	540,900
Selected unit	RST-775X3600L												
Number of units	1	1			1			2			2		
Rated flow (gpm)	62	250			250			375			375		
Rated load (lb/hr)	470	1,895			1,895			3,791			3,791		
Safety factor	75%	75%			75%			75%			75%		
Design flow (gpm)	62	188			188			375			375		
Design load (lb/hr)	353	1,421			1,421			2,843			2,843		
Required minimum operating hours													
5 days per week	11	24	24	-	16	24	-	13	24	-	-	-	-
7 days per week	8	13	24	-	12	24	-	9	24	-	24	24	-
Recommended operational metrics													
Hours per day	**8**	**16**	**24**	**-**	**16**	**24**	**-**	**14**	**24**	**-**	**24**	**24**	**-**
Days per week	**7**	**5**	**7**	**-**	**5**	**7**	**-**	**5**	**7**	**-**	**7**	**7**	**-**
Flow (gpm)	**66**	**101**	**87**	**187**	**140**	**40**	**188**	**203**	**61**	**263**	**299**	**77**	**375**
Load (lb/hr)	**664**	**544**			**849**			**1,206**			**2,843**		

Table 4-4. Thickener analysis scenarios and results for WAS

Scenario	Description
Turndown	This scenario considers "worst-case" conditions where WAS flow and load are the lowest and thickest. Opposite to other evaluated scenarios, this scenario lists maximum required operating hours needed to maintain a flow and load above minimum turndown requirements.
2023 average	2023 AA flows and loads. A key part of this assumption includes the dilute nature of the WAS. Despite the dilute assumption, WAS can be processed through one unit without issue.
2028 average	2028 MM conditions evaluate thickener performance under 2028 WAS MM flows and loads. A key part of this assumption includes the thicker nature of the WAS.
2042 MM	2042 MM conditions evaluate thickener performance under 2042 WAS MM flows and loads. Because thicker WAS is assumed, the unit can handle the proposed flows and loads without issue.
2042 peak design	A more dilute WAS for 2042 MM load is assumed, therefore increasing flow and requiring 24/7 operation to process. WAS TS cannot decrease below 0.375% under this condition or else peak conditions cannot be met from a hydraulic standpoint. A Peak:MM solids peaking factor of 4.0 would require a WAS TS of 3.0% for the same WAS flow to exceed thickener solids capacity so a WAS TS between 0.4 and 3.0 is required under peak conditions. It is expected that the thickener would be hydraulically limited under peak conditions.

Table 4-5. Thickener flow, load, operation, and other criteria for WAS redundancy

Scenario	Turndown	2023 average	2028 average	2042 MMF	2042 peak
Stream	WAS				
Year	2023	2023	2028	2042	2042
Condition	AA	MM	MM	MM	Peak
Flow (gpd)	70,900	200,100	156,700	201,800	269,100
Load (lb/d)	2,986	5,900	6,600	8,500	8,500
S.G.	1.01	1.01	1.01	1.01	1.01
% TS	0.50%	0.35%	0.50%	0.50%	0.375%
Selected unit	RST-775X3600L				
Number of units	1	1	1	1	1
Rated flow (gpm)	62.5	250	250	250	250
Safety factor	100%	75%	75%	75%	75%
Design flow (gpm)	63	188	188	188	188
Required minimum operating hours					
5 days per week	24	21	16	21	Not Viable
7 days per week	18	15	12	15	24
Recommended operational metrics					
Hours per day	**18**	**24**	**24**	**24**	**24**
Days per week	**7**	**7**	**7**	**7**	**7**
Flow (gpm)	**66**	**139**	**109**	**140**	**187**
Solids load (lb/hr)	**166**	**246**	**275**	**354**	**354**

4.3 Thickening Equipment Characteristics and Layout

Based on selected flow and load scenarios, three FKC RST-775X3600L RDTs have been selected to thicken the proposed solids streams: PS, septage, and WAS.

4.3.1 Thickening Equipment Characteristics

This unit is the same size and model and is currently used in the WAS-thickening building. The RDT technology consists of a set of rotating stainless-steel drum screens that allow liquids to drain freely from polymer-dosed sludge. The unit includes a flocculation tank ahead of the RDT, with a polymer injection ring on the influent piping. As flow enters the flocculation tank, it is mixed with polymer, develops a stable floc structure within the tank, then overflows in the rotary drum, where water can freely drain as the solids are slowly rotated toward the discharge. Spray bars clean the screen during operation. Filtrate (through appropriately sized gravity lines) will be drained back to the IPS (see Section 6.1). Discharged solids enter a hopper for the thickened sludge pumps that will take the material to the digesters. Table 4-6 summarizes proposed equipment characterization. Figure 4-1 and Figure 4-2 depict a summary of technology components and a picture of the RDT pre- and post-installation, respectively.

Table 4-6. FKC RST-775X3600L characteristics

Parameter	Value
Rated flow (gpm)	250
Rated solids throughput (dry lb/hr)	1,870
Solids capture	95%
Effluent solids concentration	6%
Polymer dose (active lb/dry ton)	7.5
Length (in.)	254.9
Width (in.)	75.4
Height (in.)	111.8
Empty weight (lb)	2,500
Operating weight (lb)	2,800
Minimum maintenance clearance (ft)	3
Largest component dimension (lb”)	8" dia., 156" L
Heaviest component (lb)	600
Special tools	Provided with equip.
Operating speed (rpm)	2–15
Noise level (dBA – 1 m)	< 70
Unit power consumption (hp)	3
Ancillary power consumption (hp)	1
Total connected power (hp)	4
Average wash water consumption (gph)	18.87
Water supply pressure (psi)	40
Minimum ventilation rate (cfm)	50–75

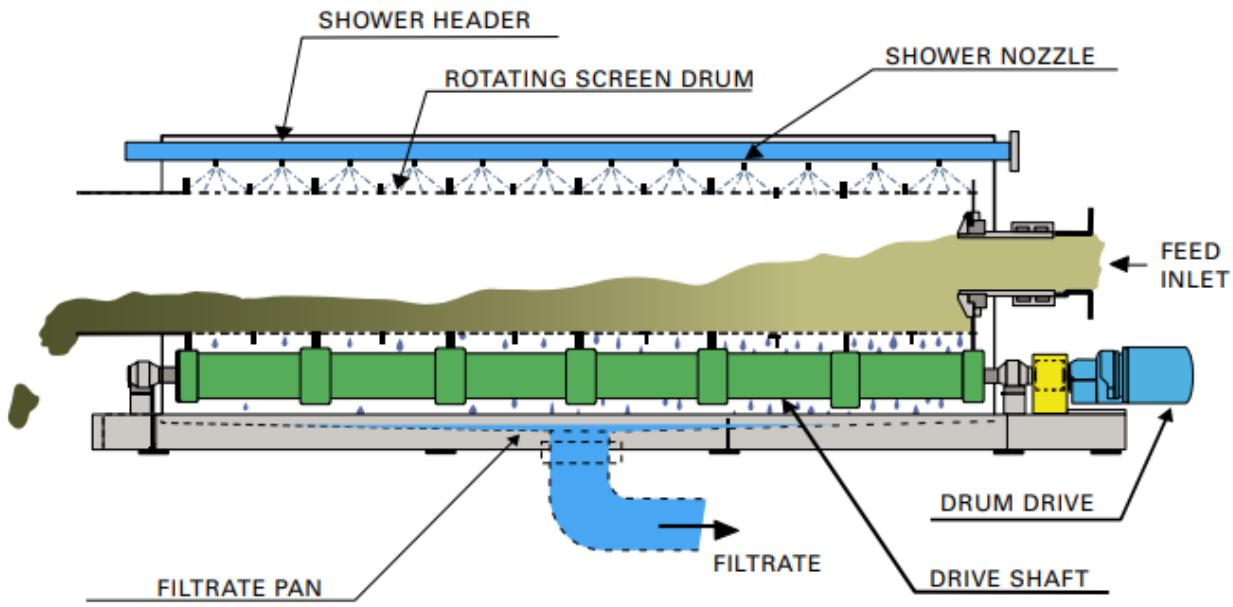

Figure 4-1. Summary of RDT components

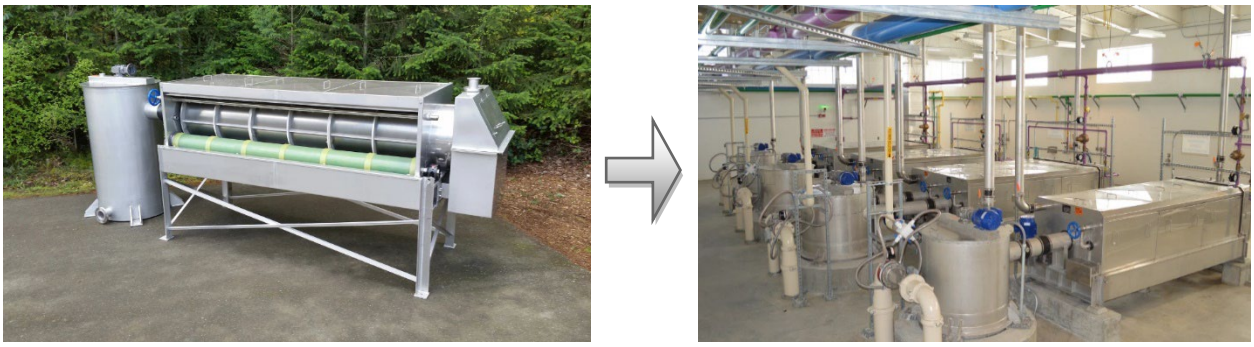

Figure 4-2. Example RDT pre- and post-installation

For recommended operational approaches for current and future conditions, it is likely that one unit will have the capacity to co-thicken PS and septage streams, but 2042 MM conditions will require two units to thicken the proposed flows and loads. The third and final unit should serve as redundancy for both WAS and PS/septage. Figure 4-3 and Figure 4-4 depict the proposed RDT layout and associated equipment within the thickening building in plan and profile view.

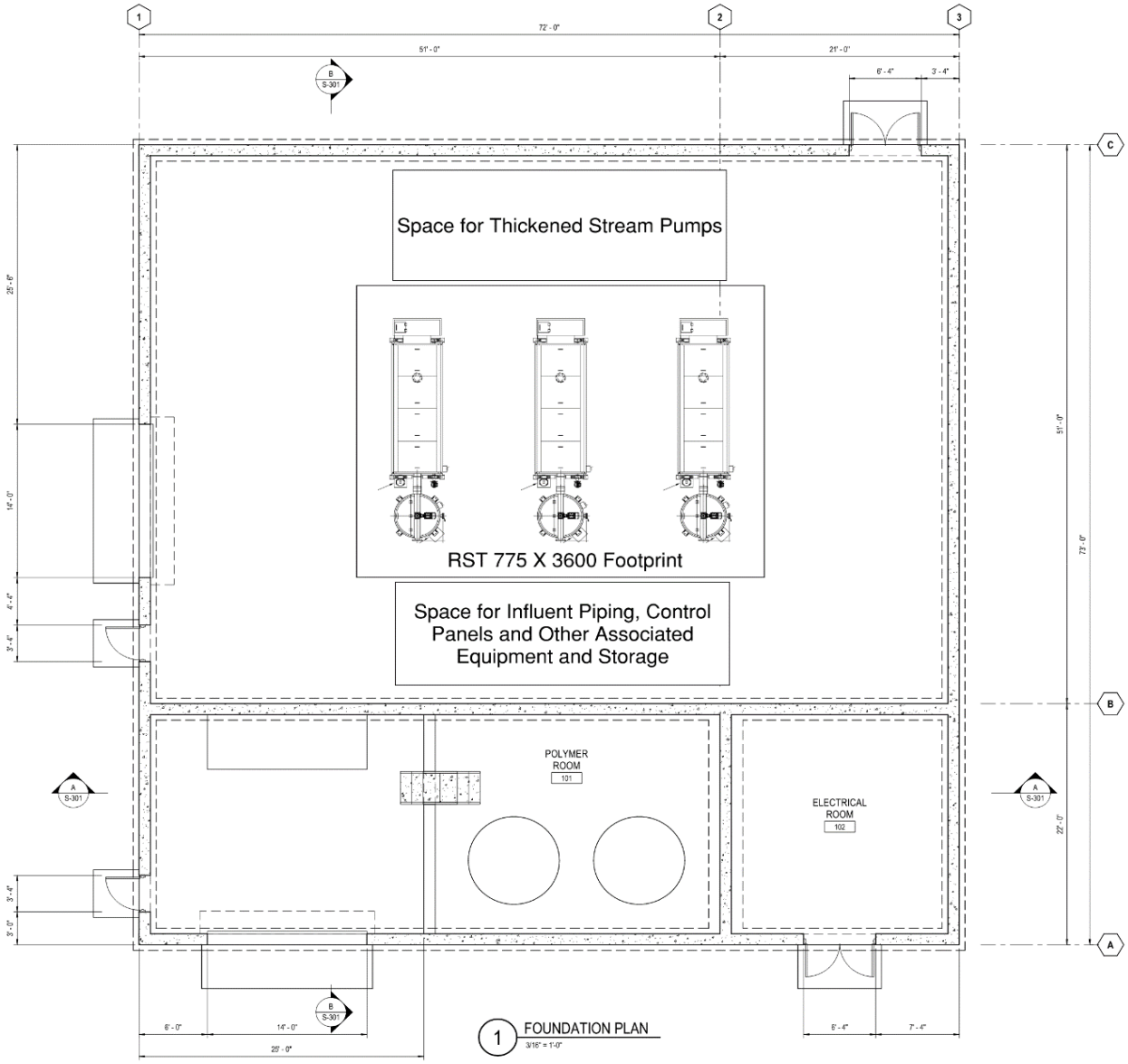

Figure 4-3. Proposed thickener layout plan view

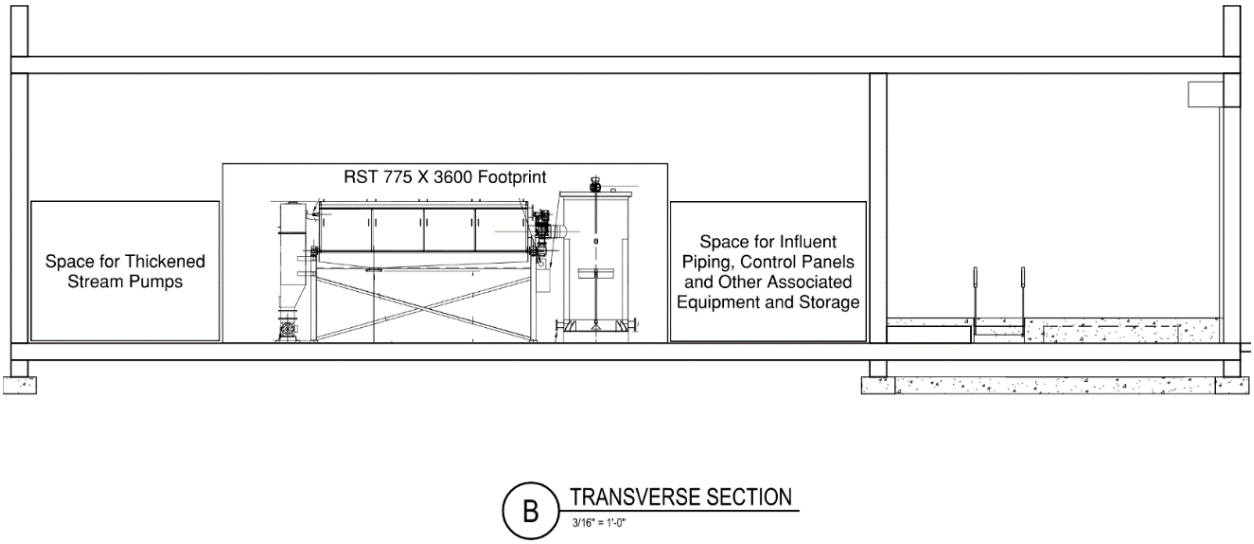

Figure 4-4. Proposed thickener layout profile view

4.4 Thickened Sludge Pump Design

Pump design for new thickened sludge pumps is based on a comparison between the summer 2023 site-specific rheology data acquired from CKTP and more standardized rheology coefficient (typical industry values based on experience with similar sludges) values through various fits for each data set. Preliminary pipe routes and fittings were also assumed at this stage of design to assess pumping sludge from the RDTs in the PS and septage thickening building to each pair of digesters.

The maximum flow through these pumps was based on the highest effluent flow, which was found to be the co-thickened PS and septage at a solids concentration of 6.0 percent, based on the FKC thickener performance for 2042 peak flows. Therefore, the thickened sludge pumps will be designed to support 50 gpm from the RDTs.

AFT Fathom software was used to determine the TDH for these pumps based on the observed rheology data from summer 2023 and various modeling curves. The results from this analysis are shown in Table 4-7. Effluent from the existing GTs, which co-thicken PS and septage, was collected and tested, as well as CKTP TWAS and HTWAS from Kingston WWTP. These streams were all evaluated to determine the loads for the new pumps. Rheology data are provided in Appendix I.

TDH values were assessed based on three fit models to find a typical range and determine a worst-case condition. AFT Fathom has a function to enter the raw rheology data to determine the model coefficients for the Power Law, Bingham Plastic, and Herschel-Buckley fits. In addition, typical industry rheology coefficients based on experience for similar sludge using the Bingham Plastic model were used in this evaluation. Estimated pipe lengths and fittings, along with the fit models, were used to evaluate the TDH for each condition. In addition, the observed rheology data were extrapolated to represent 6 percent solids, which is the expected RDT performance, and 8 percent solids, which represents an additional safety component.

Table 4-7. Thickened sludge pump evaluation at 50 gpm

Model		Observed data, Power Law fit	Observed data, Bingham Plastic	Typical industry rheology coefficients, Bingham Plastic	Observed data, Herschel-Buckley
Value	TS (%)	Total dynamic head (ft)			
All summer TPS data					
Observed	4.39	23.9	24.1	46.7	N/A
Typical	6.0	23.8	24.1	53.5	N/A
Maximum	8.0	23.7	24.0	60.6	N/A
Summer decanted TPS data only					
Observed	4.67	35.0	32.6	48.3	32.9
Typical	6.0	34.9	32.5	60.6	32.8
Maximum	8.0	34.8	32.4	60.6	32.7
All summer TWAS data					
Observed	4.93	106	111	87.9	N/A
Typical	6.0	105	111	56.2	N/A
Maximum	8.0	105	110	481	N/A
Summer CKTP TWAS data only					
Observed	5.03	139	136	92.1	N/A
Typical	6.0	138	135	91.8	N/A
Maximum	8.0	139	134	481	N/A

Preliminary design criteria were based off the highest expected TDH. In this case, the highest TDH occurs with CKTP TWAS at 8 percent TS. The typical values are based on extrapolated data, similar to those based on HDR's observed data. Therefore, pump design does not always have to accommodate these values if they are deemed unreasonable. In this case, the typical industry rheology coefficients for the Bingham Plastic model see values up to 481 feet. These values are extrapolated based on data with lower solids content. In addition, comparing other models at the same condition do not see values above 140 feet. Therefore, the outlier was not considered for BOD criteria.

Preliminary design criteria are shown in Table 4-8, which is based on the expected flows and loads from the RDT, the modeling exercise for TDH values, and an added safety factor. Two more instances of rheology testing will be conducted in early 2024 to collect winter data on this sludge. Therefore, final design criteria will be adjusted as needed to accommodate this additional information.

Table 4-8. Thickened sludge pump preliminary design criteria

Design criterion	Value	Unit	Notes
Pump type	Progressive-cavity, 2-stage	-	Minimum of a 2-stage pump for those with a TDH of > 50 psi
Design flow	50	gpm	Based on minimum solids concentration
Design TDH	150	psi	Does not account for "typical values" outliers because of the nature of extrapolation
Approximate motor size	15	hp	Based on vendor feedback

These new thickened sludge pumps are conservative in comparison to the existing TWAS pumps in the WAS-thickening building. The existing pumps are rated for 30 gpm at 100 psi. In addition, the existing pumps were evaluated to require 29.7 feet using the Bingham Plastic model for viscosity of the TWAS using AFT Fathom.

4.4.1 Polymer System Design Criteria

The polymer system will have the capability to feed polymer to either of the two solids streams (blended PS and septage and redundant WAS) upstream of the three RDTs. Each of the streams may require a different type of polymer; therefore, the system will be able to produce whichever type is needed, be it cationic or anionic emulsions. Additionally, the polymer system will allow operators to have different types of polymers in each tote without them mixing. In operation, it is expected that the RDTs will service primarily PS and septage flows, with WAS flows only serviced in rare instances for redundancy.

Initially, the design criteria used to size the system were established as the neat polymer flow rate and dilution water flow rate, which were calculated for each of the two solids streams considering each combination of the following operational parameters for 2028 AA, 2028 MM, 2042 AA, and 2042 MM flows and loads (Table 4-9).

Table 4-9. Polymer system sizing operational parameters

Operational parameters	PS and septage	WAS
Polymer		
Active polymer (%)	40	41
Dosing (lb active polymer/dry ton of solids)		
Low	12	25
High	30	30
Skid concentration (%)		
Diluted	0.25	0.50
Concentrated	0.50	1.0

Operational parameters of active polymer dosing for blended PS and septage were based on four dates of laboratory testing conducted by the RDT vendor, FKC Co., in August 2023. A detailed summary of results is provided in Appendix E. For WAS, active

polymer type currently in use is known and its operational parameters were based on operational data provided by CKTP staff.

The design criteria selected were:

- **Minimum:** 2028 AAF for low dosing and diluted skid concentration
- **Maximum:** 2042 MMF for high dosing and diluted skid concentration

Table 4-10 summarizes the initial design criteria for sizing the polymer system.

Table 4-10. Polymer system sizing initial design criteria

Design criterion	Neat polymer feed rate (gph)	Dilution water flow (gph)
PS and septage		
Minimum	0.19	75.0
Maximum	1.64	654.2
WAS		
Minimum	0.10	38.6
Maximum	0.95	379.8

After sharing these initial criteria with vendors, it became evident that the range of flows was too wide for standard manufactured polymer systems to meet CKTP's instantaneous demand. It was then investigated what these design criteria would be considering operation time (24-hour, 16-hour, 12-hour, and 8-hour).

For resilience, a system with polymer storage tanks was considered. A system such as this would not only be able to provide higher polymer aging than an instantaneous system but could also be configured to service three RDTs with only two polymer systems, thus reducing capital costs. Therefore, a new design approach was selected to size a polymer system that can outpace the instantaneous 16-hour demand by 1.5 times and fill a polymer storage tank upstream of a flocculation chamber and subsequently, service the RDT at any rate within the range of anticipated polymer dosing.

4.4.2 Polymer System Equipment Selection

Design criteria shown in Table 4-11 were provided to two prominent polymer system vendors, VeloDyne and cleanwater1 (formerly UGSI), to estimate equipment sizing and cost.

Table 4-11. Polymer system sizing revised design criteria

Design criterion	Value	Unit	Description
Polymer skid			
Neat polymer	5.2	gph	1.5× maximum criterion, WAS
Dilution water	1,472	gph	1.5× maximum criterion, PS and septage
Polymer tank metering			
Polymer storage tank	3,000	gal	High-density polyethylene (HDPE) tank
Minimum metering feed flow	75	gph	Minimum criterion, PS and septage, 24 hr operation
Maximum metering feed flow	981	gph	Maximum criterion, PS and septage, 16 hr operation

Drawings P-560, P-562 and P-563 (Appendix F) show the proposed design layout of the polymer feed system. Two emulsion polymer totes will serve their respective polymer mixing chambers and solution tanks through their neat polymer feed pumps. On the floor of the polymer room, polymer totes will be stored on scales instrumented to measure and track polymer usage. Considering 2028 and 2042 AAF projections of primary and septage flows and loads, it is anticipated that one to two polymer totes will be used per week by CKTP staff.

From the totes, the neat polymer feed pumps will send neat polymer to the polymer mixing chambers. The neat polymer will be activated in the polymer mixing chambers with the addition of 2W water, and this solution will then be fed into 3,000-gallon high-density polyethylene (HDPE) storage tanks.

Figure 4-5 shows a diagram of a typical polymer activation system, provided by cleanwater1. These systems are designed to combine high shear/low shear mixing to break the oil beads within the emulsion and elongate the high molecular weight polymer molecules. Such systems provide efficient activation for polymers and allow the make down solution to be immediately available for use (aging is not necessary).

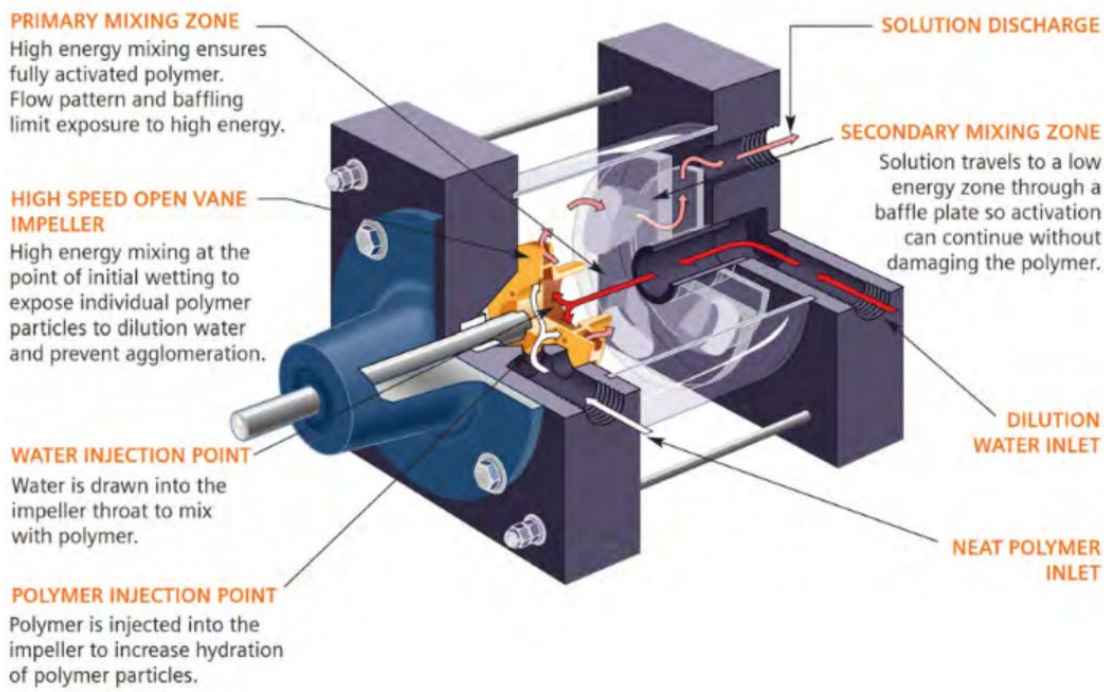

Figure 4-5. cleanwater1 Polyblend polymer feed system

A typical polymer feed pump skid assembly is shown in Figure 4-6. These skids include control panels, neat polymer pumps, and water/dilution control.

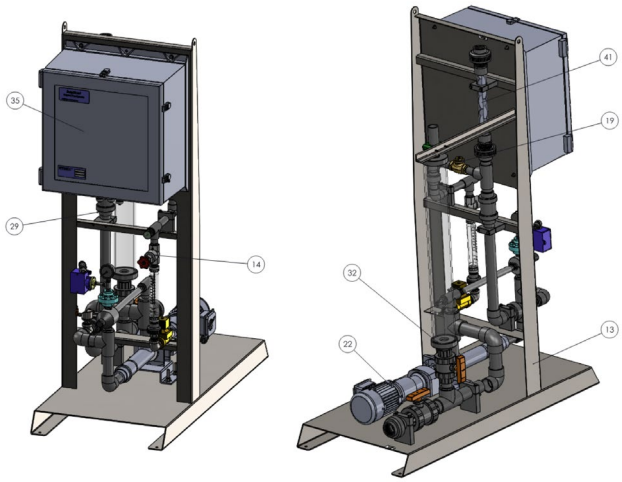

ITEM NO.	PART NUMBER	DESCRIPTION	QTY.
1	9740315	LOCK WASHER, 1/4", 316SS	14
2	9740300	1/4" SMALL OD FLAT WASHER, 316SS	14
3	1600340	BOLT, H.H., 316SS, 1/4-20 x 4-1/2	2
4	1601316	SCREW, CAP, HH, 5/16"-18 UNC-2A X 1.00 LG	4
5	5551006	LABEL, VINYL, 2" x 1", WATER INLET	1
6	5551007	LABEL, "SOLUTION OUTLET"	1
7	5551008	LABEL, VINYL, 2" x 1", POLYMER INLET	1
8	5551210	LABEL, "POLYBLEND"	1
9	5554000	LABEL, POLYBLEND SERIAL. 26ga	1
10	9741300	WASHER, FLAT, .313, 316SS	8
11	5551209	LABEL, WATER FLOW	1
12	2727590	1/2" FLEX CONDUIT CONNECTOR, HUBBELL	6
13	556030-S2	FINAL FEED SKID ASSEMBLY, WELDMENT	1
14	556030-SA8	WATER INLET ASSEMBLY, 600 GPH, 1" PIPING	1
15	1931024	BUSHING PIPE REDUCER, PVC, 1.5" X 1", SXS, SCH 80	1
16	1692001	BLOCK, PIPE, PVC, BOTTOM, 1" SCH 80	1
17	3571006	PVC PIPE ELBOW, 90, 1", SxS, SCH.80	2
18	RM6600101	PVC PIPE, SCH 80, 1"	3'
19	9572241	VALVE, CHECK, 1" SPRING BRONZE	1
20	9501006	PVC PIPE UNION, SCH. 80, 1" SxS, VITON	1
21	1692000	BLOCK, PIPE, PVC, TOP, 1", SCH 80	1
22	556030-SA7	PROGRESSIVE CAVITY PUMP ASSEMBLY, 180 GPH	1
23	1690537	BRACKET, PIPE CLAMP, 1.50 DIA	3
24	3571008	ELBOW, 90, PVC, SCH 80, SxS, 1.5"	1
25	1692013	BLOCK, BOTTOM, SPECIAL, 2" DIA. PVC	2
26	1692014	BLOCK, TOP, SPECIAL, 2" DIA. PVC	2
27	RM6600401	PVC PIPE, 2", SCH. 80	2'
28	3571009	PVC ELBOW 90, 2" SXS, SCH. 80	2
29	9572061	VALVE, BALL CHECK, 1.5" PVC T-U	1
30	RM6600301	PVC PIPE, SCH. 80, 1.5"	4'
31	8851008	TEE, PVC, SCH 80, SLIP, 1-1/2"	1
32	556030-SA9	CALIBRATION COLUMN ASSEMBLY, 7,000mL	1
33	5960815	PVC PIPE TOE NIPPLE, SCH. 80, SxT, 1.5" x 3"	2
34	RM2701081	1/2" ELECTRICAL CONDUIT	15'
35	556030-S53	FINAL FEED CONTROL PANEL	1
36	5960114	PVC PIPE NIPPLE, TOE, 1" MPT x 6", SCH. 80, CUT	2
37	FD0218014	ANGLE IRON, 1.5" x 1.5" x 3/16", 316SS	3'
38	1600343	BOLT, HEX, 316SS, 1/4-20 x 6"	4
39	6022231	5/16"-18 NE 316SS NYLON LOCK NUT	4
40	1600341	1/4"-20 x 5" 316 SS HEX CAP BOLT	6
41	556030-S3	KOFLO STATIC MIXER, 1-1/2" x 15", 6 ELEMENTS	1
42	9500008	PVC PIPE UNION, SCH 80, 1.5" TxT	2
43	FD0150103	CLAMP 1-1/2" PIPE	1
44	1600338	HEX BOLT, 1/4"-20 X 3.5" , 316SS	2
45	2726564	CONNECTOR, CORD GRIP, 1/2" MPT	1
46	P12655	CONDUIT LOCK NUT, 1/2"	1
47	U22760	SEAL RING, CONDUIT, 1/2"	1
48	FD0090187	STUD, 1/2"-13 X 2 1/2" 304SS	4
49	9744300	WASHER, FLAT, 1/2", 316SS	4
50	6022431	1/2"-13 NE 316SS NYLON LOCK NUT	4

Figure 4-6. cleanwater1 polymer feed pump skid assembly

From the storage tank, polymer will be metered to feed the demand of the solid streams. Controls allow for the operation of three RDTs to be serviced by two polymer systems. This design will allow the polymer system to meet the full range of dosing needs for the anticipated solids streams. Preliminary design criteria are shown in Table 4-12, which is based on the design criteria discussed in Table 4-11.

Table 4-12. Polymer feed pump preliminary design criteria

Design criterion	Value	Unit	Notes
Pump type	Progressive-cavity	-	Viton stator, 316 stainless-steel rotor, single mechanical seal
Design flow minimum	75	gph	Based on thickening PS and septage at instantaneous demand with 5 lb active polymer/dry ton of solids; 0.25% neat; 0.1% active polymer
Design flow maximum	981	gph	Based on thickening PS and septage for max month flow and polymer dosing at 12 lb active polymer/dry ton of solids
Design TDH	60	psi	-
Approximate motor size	2	hp	May need to operate at higher frequency to meet 13:1 solution pump feed rate requirement; cleanwater1 recommends operating at 77 Hz

The polymer selected for use in the system will require field testing and confirmation with both polymer vendors and the thickening equipment supplier (FKC) to optimize; however, initial jar testing by FKC (Appendix E) can be used as a basis for an initial selection during startup of the equipment.

This page is intentionally left blank.

5 Anaerobic Digestion

The following section outlines the current baseline and expansion of the CKTP mesophilic anaerobic digestion system, including current flow and loads, with associated hydraulic retention time (HRT), as well as the proposed improvements and future system capacity.

5.1 Digester Process Improvements

Kitsap County has been evaluating improvements for the solids-handling facilities at CKTP because of the approaching end of service life of the existing digesters, increase in WWTP solids and LHW, and lack of digestion redundancy. The facility has also experienced performance issues with its anaerobic digesters relative to apparent volatile solids reduction (VSR). Previous facility plan analysis has also observed the need for increased flexibility for digester feeding, improved monitoring and control for feeding of the different solids streams, and additional capacity for digester gas.

CKTP currently has two 0.65 MG anaerobic digesters that were constructed in 1977 and have fixed steel covers that were replaced in 1992. Both digesters are typically operated continuously, and removing one digester from service significantly compromises CKTP's solids-handling operations and its ability to receive LHW, in particular, hauled septage.

5.1.1 Historical Digester Flows and Loads and Digester Performance

Current influent flows to each digester are monitored from the following three sources:

- **GT** (co-thickened PS and septage)
- **TSBT** (includes CKTP TWAS and TWAS hauled from other Kitsap County WWTPs)
- **Grease** (hauled, which also accounts for negligible amounts of scum as FOG hauls are currently discharged to the primary clarifier scum pits)

CKTP operations staff analyzes weekly samples of the two largest streams (from GTs and TSBT) for TS and VS. Digester feed and withdrawal rates to the centrifuge are managed to maintain, on average, a relatively constant digester level.

To better understand the current digester operation and performance, in addition to the previous facility planning efforts, digester feed data from 2021 to the first quarter of 2023 were analyzed.

Figure 5-1 presents monthly averages for digester influent flows from each source, as well as the total digester influent flows. Table 5-1 summarizes the AAF per source, total digester influent flows, and calculated HRT. When digesters are not designed to withdrawal supernatant and there is only one effluent stream, the HRT can be used interchangeably with the SRT to estimate digester performance. HRT was determined by dividing the nominal digester volume by the influent flow; the nominal digester volume of 642,830 gallons was used for calculations to match the value used by CKTP. Table 5-2 summarizes the AA solids loading per source and total digester influent solids loading.

Figure 5-2 shows charts for the composition of digester influent flows and influent solids loading per sludge source for the period of 2021 to first quarter (Q1) 2023. Table 5-3

summarizes the annual percentages of each influent source in the composition of digester influent flow and solids loading.

Figure 5-3 shows a chart for monthly average digester HRT and VAR for the period of 2021–Q1 2023; the VAR factor is determined by the VSR, which can be determined by various methods. Since 2022, with approval from Ecology, CKTP has used the direct mass balance method in lieu of the Van Kleeck method, as the latter could be overly conservative depending on the digester operating conditions and inert material (HDR 2021). HRT values for August and September 2022 were impacted by having one of the digesters offline to complete an emergency repair of the existing cover seals.

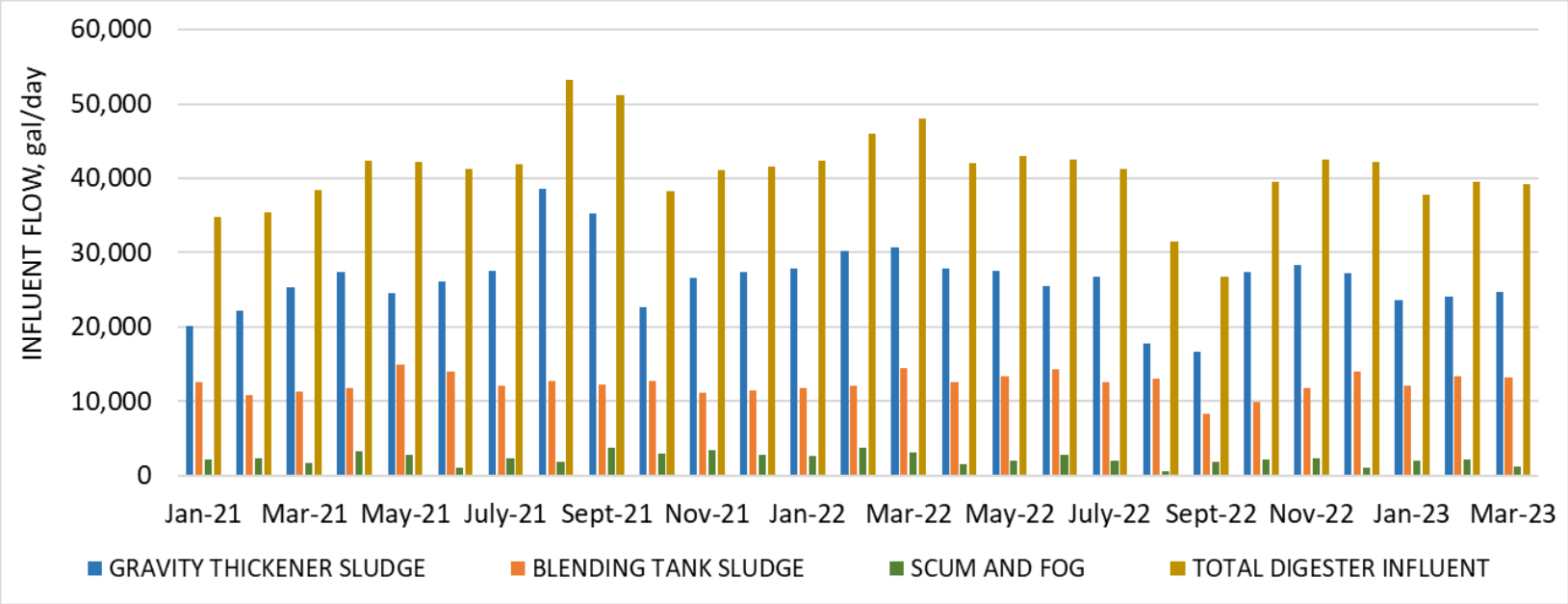

Figure 5-1. 2021–Q1 2023 total digester influent flows and flows per feed source

Table 5-1. 2021–Q1 2023 total digester influent flows, average HRT, and flows per feed source

Date range	Gravity thickener (gpd)	Blending tank (gpd)	Scum and FOG (gpd)	Total digester influent (gpd)	Average digester HRT (days)
2021	26,975	12,311	2,526	41,812	31.20
2022	26,146	12,344	2,138	40,627	32.43
Q1 2023	24,112	12,883	1,838	38,833	33.12
2021–Q1 2023 avg.	**26,288**	**12,389**	**2,277**	**40,955**	**31.39**

Table 5-2. 2021: total digester influent solids loading and solids loading per feed source (lb/d)

Date range	Gravity thickener	Blending tank	Scum and FOG	Total digester influent
2021	11,394	5,752	351	17,497
2022	12,186	6,100	357	18,643
Q1 2023	9,946	5,941	297	16,184
2021–Q1 2023 avg.	**11,605**	**5,916**	**346**	**17,867**

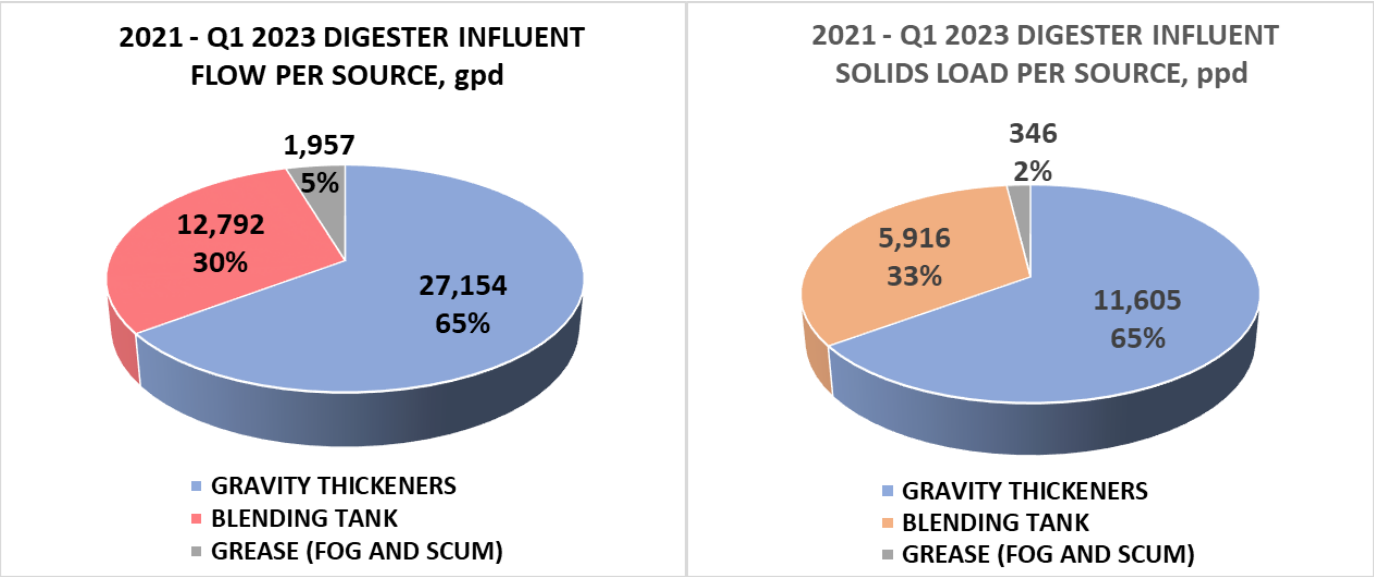

Figure 5-2. 2021–Q1 2023 digester influent flows and solids load composition per solids source

Table 5-3. 2021–Q1 2023 digester influent flows and solids load composition per solids source

	Gravity thickener	Blending tank	Scum and FOG
Percent influent flow per sludge source			
2021	65%	30%	5%
2022	65%	31%	5%
Q1 2023	62%	33%	4%
2021–Q1 2023 avg.	**65%**	**31%**	**5%**
Percent influent solids loading per sludge source			
2021	65%	33%	2%
2022	65%	33%	2%
Q1 2023	61%	37%	2%
2021–Q1 2023 avg.	**65%**	**33%**	**2%**

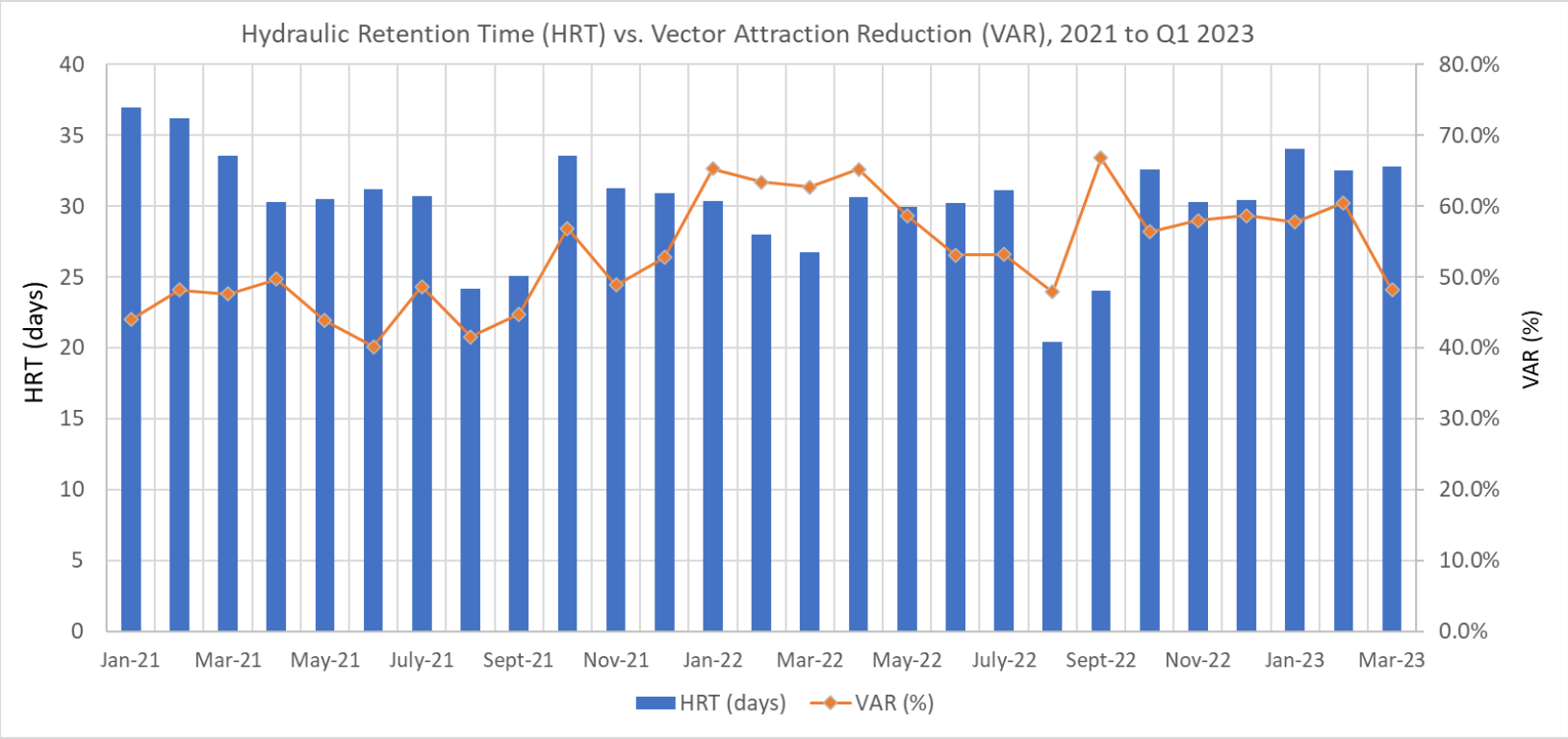

Figure 5-3. HRT vs. VAR, 2021–Q1 2023

Based on current flows, the existing digesters still allow for an adequate retention time that is conservative relative to the required minimum for Class B solids (15 days). Despite this HRT, prior to modification of the mass-balance calculation it appeared more difficult to maintain VSR percentages well above the minimum of 38 percent to meet the biosolids treatment goal of Class B, per EPA biosolids regulations. The alternative mass-balance calculation shows generally higher VSRs (above 50 percent) that are more in line with what would be typically expected for the extended digester HRT at CKTP. It was also observed that an increase in HRT did not always result in an improvement in VSR. That can be observed in Figure 5-3 between April and July 2022, when the HRT was maintained somewhat constant at approximately 31 days, while VAR decreased from 65.2 percent in April to 53.2 percent in July. In general, a strong correlation between the HRT and VAR was not readily apparent. The variability in the response is likely related to two other factors:

1. Longer retention times (well above 20 days) create diminishing returns relative to the effect of slight variations in HRT on VSR (effectively the great majority of the available VSR has taken place).
2. The type of feed to each digester can vary from month to month, depending on the length of time when loads of FOG or septage have been devoted to one tank over another. The changes in VSR may be more closely related to feed type than HRT.

One example of factor 2 above is the septage feeding to the digesters, which presents highly variable conditions (pH, VSS, and presence of specific components) per each septage haul and that CKTP has limited conditions to monitor and address prior to routing through the thickening system. The frequency and flow rates of hauled septage are also variable, and CKTP currently lacks the ability to equalize those flows prior to sending septage to the GTs. That can create a thickened blended sludge (septage and PS) that is inconsistent in quality and proportions of the different sludges, which creates less consistent feeding to the associated digesters. Another example is the FOG feeding to the digesters. Similarly to septage, CKTP has limited ability to control the flow and frequency of FOG loads. Although a smaller source of digester influent, the variability in FOG feed (high VS content) can affect the digesters' VSR performance.

The improvements provided in this report will provide improved flexibility for receiving, equalizing, and monitoring for septage flows, allowing a more consistent blend with PS prior to feeding to the digesters. The proposed improvements will also expand on monitoring and feed control for FOG feeding, allowing a more consistent feed to each digester.

In addition, the current digester operations lack redundancy for the digester tanks, which does not allow one tank to be taken out of service without significantly impacting operation and HRT. In the event that all digester influent flows needed to be sent to one tank only, retention times would be approximately 15 days, assuming total average daily flow to digesters from 2021–Q1 2023, which is the minimum recommended retention time to achieve the Class B biosolids and would likely have a significant impact on operations of the CKTP digesters. Once again, the improvements in this report are designed to increase the overall HRT and allow for redundancy within retention times that have a greater safety factor relative to Class B biosolids minimum VAR requirements.

5.1.2 Design Digester Influent Flows and Loads

The proposed digester improvements considered the 2028 and 2042 flows and loads projections were retrieved from the Central Kitsap WWTP LHWS (Murraysmith 2022), as discussed in Section 2. The thickened flows and loads for septage and PS were calculated based on the predicted performance of the RDTs, planned to replace the existing GTs, assuming a thickened sludge concentration of 6 percent. For the digester influent flows and loads evaluation, capture rate for the RDTs was assumed at 100%, which is higher than the anticipated performance of the RDTs, as discussed in Section 4.3. That assumption on capture rate was also applied to the existing RDT for WAS. Assuming 100% capture rate add conservativeness to the solids load rates associated with the thickened septage, TWAS, and PS streams, and accounts for solids not initially captured at the RDTs (present in the filtrate stream) that will be sent back to the Headworks and will likely be captured downstream.

The LHWS also provided projections for flows and loads of the HTWAS from satellite WWTPs, where it is currently blended with TWAS produced at CKTP (Murraysmith 2022). Projected CKTP TWAS was estimated during the facility planning effort and could also be determined by subtracting flows and loads of each solids stream from the total projected flows and loads in the LHWS (Murraysmith 2022). However, when comparing current flows and loads from the TSBT to the digesters (CKTP TWAS and HTWAS combined) with the projected values, it was noted that average current flows were larger than 2028 AAF projections and therefore projected values could potentially be underestimating future flows. TWAS flows generated at CKTP are substantially greater than HTWAS from other facilities, and CKTP TWAS is proportional to WAS yield at CKTP, assuming constant performance of the existing WAS RDT. The WAS yield at CKTP has generally decreased since 2019 (which is the beginning of WAS data made available to HDR) because BNR operations were implemented over the last several years. However, BNR operation has not been constant. The TWAS flows projections generally tend to assume BNR operation. However, to provide a conservative and robust design for the new digester facilities, HTWAS and CKTP TWAS flows and loads were reevaluated and adjusted to better align with the most current flows and loads from TSBT to the digesters and provide a more robust safety factor.

Scum from clarifiers will continue being routed to digesters, but based on current operations scum flows are negligible and infrequent. Per discussions with CKTP staff, an assumed flow of 3,000 gallons per week was considered for all projections. Scum solids load was determined using the average %TS based on CKTP operation records.

The projected digester influent flows, TS and VS loadings, and approximate TS percent per solids stream are presented in Table 5-4. These values served as design criteria for the new digester facilities. Scum from clarifiers will continue being routed to digesters, but based on current operations scum flows are negligible and infrequent and were not considered for projections.

Table 5-4. Design digester influent flows and loads, 2028 and 2042 projections

Digester influent source	Parameter	2028		2042	
		AAF	MMF	AAF	MMF
Thickened septage [a]	Influent flow (gpd)	9,700	13,900	17,700	25,500
	Influent solids (lb/d)	5,100	7,300	9,300	13,400
	TVS influent (lb/d)	4,340	6,210	7,910	11,390
	% solids	6%	6%	6%	6%
FOG [b,c]	Influent flow (gpd)	2,800	7,800	4,200	13,400
	Influent solids (lb/d)	400	1,100	600	1,900
	TVS influent (lb/d)	360	1,000	550	1,730
	% solids	1.7%	1.7%	1.7%	1.7%
Scum [a]	Influent flow (gpd)	107	107	107	107
	Influent solids (lb/d)	3.2	3.2	3.2	3.2
	TVS influent (lb/d)	2.8	2.8	2.8	2.8
	% solids	0.36%	0.36%	0.36%	0.36%
Thickened primary sludge (TPS) [a]	Influent flow (gpd)	11,600	13,300	15,800	17,700
	Influent solids (lb/d)	6,100	7,000	8,300	9,300
	TVS influent (lb/d)	5,190	5,950	7,060	7,910
	% solids	6%	6%	6%	6%
Thickened TWAS from other WWTPs [a]	Influent flow (gpd)	5,300	8,400	6,300	9,900
	Influent solids (lb/d)	2,100	3,300	2,500	3,900
	TVS influent (lb/d)	1,790	2,810	2,130	3,320
	% solids	4.5%	4.5%	4.5%	4.5%
Thickened CKTP TWAS [a]	Influent flow (gpd)	10,100	13,100	13,100	16,900
	Influent solids (lb/d)	5,100	6,600	6,600	8,500
	TVS influent (lb/d)	4,340	5,610	5,610	7,230
	% solids	5.75%	5.75%	5.75%	5.75%
Total digester influent	**Influent flow (gpd)**	**39,610**	**56,610**	**57,210**	**83,510**
	Influent solids (lb/d)	**18,800**	**25,300**	**27,300**	**37,000**
	TVS influent (lb/d)	**16,020**	**21,580**	**23,260**	**31,580**
	% solids	**5.4%**	**5.1%**	**5.4%**	**5.1%**

a. Estimated %TVS for septage, scum, primary sludge and TWAS = 85%..
b. Estimated %TVS for FOG = 91%.
c. A dilution factor of 20% was added to FOG flows to account for wash water at the receiving station. %TS accounts for dilution.

Although Table 5-4 presented each solid stream that is ultimately fed to the digesters, digester feeding will occur from three main sources, similar to the existing sources described in Section 5.1.1:

- **Blended sludge** (PS and septage), thickened at the new PS and septage thickening building, replacing the existing GTs (see Section 4)
- **TWAS** (CKTP TWAS and HTWAS), pumped from the existing WAS-thickening building with provisions for redundancy at the PS and septage thickening building
- **FOG**, from new FOG building

Figure 5-4 and Figure 5-5 detail the proportion of each sludge source in the composition of the overall digester influent feed flows and solids loading, for the 2028 AAF and 2042 AAF projections, respectively. The sludge composition based on flow projections is substantially similar to the current digester influent composition, as shown in Figure 5-2. Combined septage and PS still represents the majority of the digester influent, at approximately 60 percent for both flows and solids loading. Combined TWAS is the second largest source of digester feed, at approximately 35 percent of the flows and loads, while FOG represents approximately 5 percent or less of the digester influent flows and solids loads.

In absolute numbers, the 2028 AAF projections estimate a digester influent flow rate of 39,610 gpd, which is slightly smaller than the 2021–Q1 2023 average flow rate of 40,955 gpd. That decrease is mostly due to an increase in TS concentration (percent TS) of the PS and septage stream, which is the largest contributor of digester influent. Concentration of the thickened and blended septage and PS is anticipated to increase from 4.9 percent of current operations (2021–Q1 2023 average) to 6.0 percent with the adoption of RDTs in lieu of the existing GTs. For influent solids, the 2028 AAF projections estimate approximately 18,800 lb/d, which is an increase from the 2021–Q1 2023 average influent solids rate of 17,867 lb/d.

The proposed improvements for the digester facilities use the 2042 MM flows and loads projections as design criteria. This will allow CKTP to accommodate nearly double the current average flow rate and solids loading, with a design, as outlined in Section 4 and following sections, that provides improved thickening, feed controls, monitoring, and redundancy for the different solids sources.

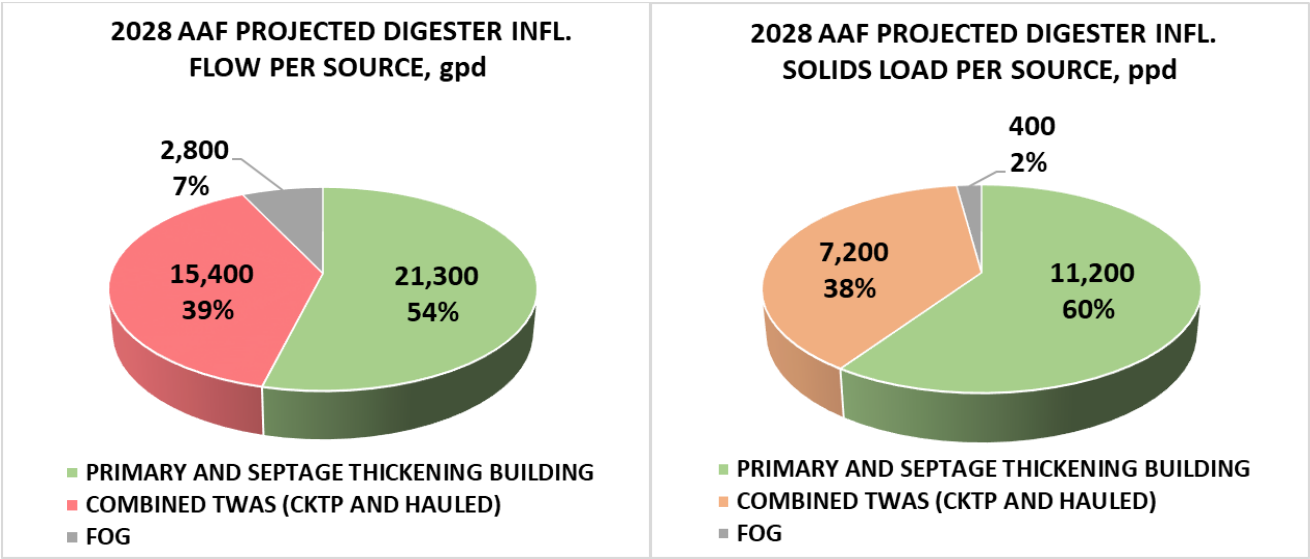

Figure 5-4. 2028 AAF digester influent flows and solids load composition per solids source

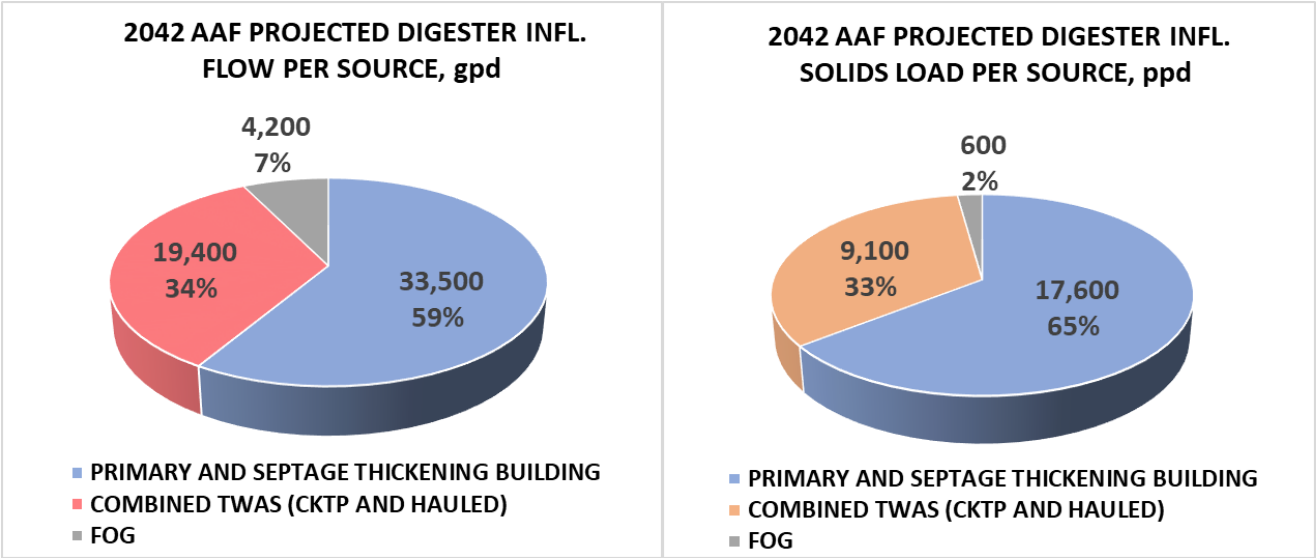

Figure 5-5. 2042 AAF digester influent flows and solids load composition per solids source

This page is intentionally left blank.

5.1.3 Digester Improvement Alternatives

HDR evaluated alternatives to increase CKTP's digestion capacity and allow for robust retention times for the projected digester influent flows and loads. In addition to rehabilitating the two existing digesters, two main options were considered for digester expansion: construction of one 1.3 MG digester or construction of two 0.65 MG digesters. The alternatives were presented and discussed with CKTP staff during a workshop in June 2023 (Appendix A).

Both alternatives would double current digester capacity and would allow for much greater HRT with all digesters in operation. However, the alternative of constructing two additional digesters for a total of four 0.65 MG digesters would provide additional flexibility and redundancy, as one of the digesters could be taken offline without significantly compromising retention time for most of the anticipated flows. The alternative of constructing one additional 1.3 MG digester would require a smaller footprint and would be less expensive to construct and maintain but could significantly impact HRTs if the larger digester is taken out of service in the future. Additionally, having four 0.65 MG digesters would facilitate maintenance and operations as auxiliary systems (mixing system, recirculation, HEXs) would be of similar size and type among all digesters.

Therefore, CKTP staff selected the approach of having two new 0.65 MG digesters because of its improved redundancy and lower long-term risk in meeting HRTs and pathogen reduction. A summary of the workshop discussions is presented in Appendix A.

In addition to the strict doubling of the digester volume, it is anticipated that the vertical walls of the existing digesters will be increased in height (to raise and upsize the overflow pipe). This will provide roughly 2 feet of additional active volume (roughly 50,000 gallons) to each tank for a total of approximately 0.7 MG of volume per tank, which is an additional improvement over the current system. The new digesters will also be 0.7 MG to match the rehabilitated existing digesters.

5.1.4 Digester Operating Modes

As part of the evaluation of digester improvement alternatives and analysis of flows and loads, a mass-balance evaluation was conducted to determine parameters such as digester loading, estimated HRTs, volatile solids destruction (Vd), VSR, and VS loading rate for the proposed system of new and rehabilitated digesters. This mass-balance evaluation considered four 0.7 MG digesters in various operating modes:

- Four digesters online, operating in parallel
- Three digesters online, operating in parallel (redundant unit out of service)
- Digesters operating in series (two-stage): two primary and two secondary digesters

Table 5-5 summarizes the mass-balance parameters for the various operating modes. For mass-balance calculations, HRT is considered equivalent to SRT. The Vd parameter (which is equivalent to VSR) was determined using Equation 1 (Metcalf & Eddy/AECOM 2014) as an empirical reference for VSR.

$$Vd = 13.7\ln(SRT) + 18.9$$

(Equation 1)

The Vd parameter presented on Table 5-5 was calculated for comparative purposes only, as it likely overestimates the Vd by accounting for the large HRTs that the upgraded digester facilities will allow for. This parameter is intended for high-rate digestion systems (15–20 days), while the system under design for CKTP operates more similarly to low-rate digesters (30–60 days). Therefore, the calculated Vd is not an anticipated or design performance criterion for the digester system.

To estimate effluent TS and VS loading out of the digesters, a mass balance–based solids destruction parameter (U%) was assumed for the different digester operations (in parallel and in series). For in-parallel digester operations, an average VSR of 50 percent was assumed, while combined VSR (at primary + secondary digester) for in-series operations was assumed at 55 percent (the sum of removal rates for each digester in-series operation, shown in Table 5-5). These assumptions are conservative and consistent with average VSR values shown on Figure 5-3 above, although the proposed upgrades will likely improve the average VSR. The slightly larger VSR anticipated when digesters are operated in series is supported by Zahller et al. (2005), which reported that for a similar SRT, a two-stage digester provided better VSR and more methane production. For the overall VSR when digesters are operated in series, approximately 75 percent of the destruction is anticipated to occur at the primary digesters.

Table 5-5. Mass balance for proposed digesters per 2028 and 2042 projected flows and solids loads

Digester operation	Parameter	2028		2042	
		AAF	MMF	AAF	MMF
Parallel operation (normative)					
4 digesters in operation	Influent flow per digester (gpd)	9,903	14,153	14,303	20,878
	Influent solids loading per digester (lb/d)	4,700	6,325	6,825	9,250
	Influent VS per digester (lb/d)	4,005	5,395	5,815	7,895
	HRT (days)	**70.69**	**49.46**	**48.94**	**33.53**
	VS loading rate (lb/ft^3/d)	**0.043**	**0.058**	**0.062**	**0.084**
	Vd from HRT (%)	77.2%	72.3%	72.2%	67.0%
	VSR (%)	50%	50%	50%	50%
	Effluent solids loading per digester (lb/d)	2,698	3,628	3,918	5,303
	Effluent VS per digester (lb/d)	2,003	2,698	2,908	3,948
3 digesters in operation, 1 offline	Influent flow per digester (gpd)	13,203	18,870	19,070	27,837
	Influent solids loading per digester (lb/d)	6,267	8,433	9,100	12,333
	Influent VS per digester (lb/d)	5,340	7,193	7,753	10,527
	HRT (days)	**53.02**	**37.10**	**36.71**	**25.15**
	VS loading rate (lb/ft^3/d)	**0.057**	**0.077**	**0.083**	**0.112**
	Vd from HRT (%)	73.3%	68.4%	68.3%	63.1%
	VSR (%)	50%	50%	50%	50%
	Effluent solids loading per digester (lb/d)	3,597	4,837	5,223	7,070
	Effluent VS per digester (lb/d)	2,670	3,597	3,877	5,263
In-series operation					
2 primary digesters	Influent flow per digester (gpd)	19,805	28,305	28,605	41,755
	Influent solids loading per digester (lb/d)	9,400	12,650	13,650	18,500
	Influent VS per digester (lb/d)	8,010	10,790	11,630	15,790
	HRT (days)	**35.34**	**24.73**	**24.47**	**16.76**
	VS loading rate (lb/ft^3/d)	**0.084**	**0.114**	**0.122**	**0.166**
	Vd from HRT (%)	67.7%	62.9%	62.7%	57.5%
	VSR (% of Influent Load)	41.3%	41.3%	41.3%	41.3%
	Effluent solids loading per digester (lb/d)	5,635	7,579	8,184	11,079
	Effluent VS per digester (lb/d)	4,245	5,719	6,164	8,369
2 secondary digesters	Influent flow per digester (gpd)	19,805	28,305	28,605	41,755
	Influent solids loading per digester (lb/d)	5,635	7,579	8,184	11,079
	Influent VS per digester (lb/d)	4,245	5,719	6,164	8,369
	HRT (days)	**35.34**	**24.73**	**24.47**	**16.76**

Digester operation	Parameter	2028		2042	
		AAF	MMF	AAF	MMF
	VS loading rate (lb/ft^3/d)	**0.045**	**0.061**	**0.066**	**0.089**
	Vd from HRT (%)	67.7%	62.9%	62.7%	57.5%
	VSR (% of Influent Load)	13.7%	13.7%	13.7%	13.7%
	Effluent solids loading per digester (lb/d)	4,999	6,721	7,259	9,823
	Effluent VS per digester (lb/d)	3,609	4,861	5,239	7,113

Mass-balance results show that proposed digester improvements will allow for generous retention times in any of the considered flows and loads projections. For the 2028 MMF projection, when flows and loads are anticipated to be more than 35 percent larger than current flows and loads, HRTs were approximately 50 days with all four digesters in operation and over 37 days with just three digesters in operation. For the 2042 MMF projection, flows and solids loading are double the current flows and loading, and calculated HRTs were nearly 34 days with four digesters in operation and 25 days with three digesters in operation. With digesters operating in series, HRT at each tank will be approximately 17 days, summing up to 34 days when considering primary and secondary retention times. Typically, a combined retention time between primary and secondary digester results into improved VSR when compared to a single-phase digester with similar retention time by approximately 5 percent (Zahller et al. 2005).

The calculated HRTs for the 2028 and 2042 projections, for three and four digesters in operation, resulted in retention times that are much greater than existing HRTs for most operating conditions. The only exception is the worst-case scenario considered, at 2042 MMFs with three digesters in operation, when the calculated HRT of approximately 26 days was slightly lower than the 2021–Q1 2023 average of 31.4 days. However, the improved digester feed control, screening, thickening, and monitoring of the different influent solid streams, as proposed by this upgrade project, should support a satisfactory digester performance even at this extreme edge of potential high loads in the future.

Another parameter used to evaluate digester sizing is the VS loading rate, which is the amount of VS added per day per unit volume of digester capacity. Typical solids loading rate criteria for a mesophilic high-rate complete-mix anaerobic digester vary between 0.1 and 0.3 pound (lb) volatile suspended solids (VSS)/(cubic foot-day [ft^3-d]). Considering parallel digester operations, loading rates were lower than 0.1 lb VSS/(ft^3-day) for all projected solids loading, with three or four digesters in operation, except for the scenario where 2042 MMF is fed to three digesters only, which resulted in a solids loading of 0.110 lb VSS/(ft^3-d). In all cases, the CKTP digesters are effectively low-rate mesophilic digesters (loaded well below their capabilities) with retention times in the 30- to 60-day range.

Considering the larger HRT for most digester operations, similar composition of digester influent feed to existing, and improved feed controls, monitoring and thickening process, it is reasonable to assume that the proposed digesters will provide a VSR (and therefore, VAR) performance that is similar to or better than the existing digesters at current loads, even at projected 2042 conditions. As shown in Figure 5-3 above and discussed previously, an HRT larger than 25 to 30 days does not necessarily result in additional VSR, but it does provide flexibility and resilience for larger flows and loads that may

occur in the future. The proposed digester improvements provide even greater HRTs for the flows considered, to allow CKTP to have redundancy of digester facilities and take one digester offline without significant compromises in digester operation or performance. A stable VAR will be supported by enhanced septage- and FOG-receiving facilities, in particular the addition of equalization for septage flows, improved thickening for PS and septage, and improved digester feed controls that promote a more equal distribution of flows to each digester.

5.2 Digester Design

Given the mass balance and process analysis of the previous section, the new digester design will incorporate sizing and operational features to allow for improved HRT and enhanced operation. The two new proposed digesters (Digesters 3 and 4) will be designed to match the existing digesters (Digesters 1 and 2) in shape, diameter, and elevations as much as possible. That consistency among all four digesters will facilitate a homogenous flow distribution, promote similar performance between the digesters, and make for similar operations between the digesters.

The existing digesters will be rehabilitated, including the replacement of all auxiliary systems (mixing, HEXs, feed and withdrawal pumps, etc.), covers, interior coating, and reconditioning of the structure as needed. The existing digesters side walls will be increased by 5 feet, increasing height from 31 feet to 36 feet, so that the overflow pipe can be raised and upsized. That will also allow for a higher digester operating level and will increase digester capacity from 0.65 MG to 0.70 MG. This feature is proposed and will be fully evaluated structurally as part of the final design effort.

The new digesters will be constructed of cast-in-place or prestressed concrete and will have an internal diameter (ID) of 65 feet and side wall height of approximately 36 feet, to match the rehabilitated existing digesters.

5.2.1 Digester Area Layout

Digesters 3 and 4 are proposed for an area southeast of the existing Digesters 1 and 2, as shown on Figure 5-6 and Appendix H. The proposed area for the new digesters is at a slope, nearby the existing access road that connects the entrance of CKTP to the existing septage-receiving station and headworks building. The grade of the proposed location will allow for a partially buried digester structure at similar elevations to the existing digesters, which will support consistent operations between the digesters. Both pairs of digesters will have process buildings between the digester structures; the existing building between Digesters 1 and 2 will be rehabilitated to meet current building codes and to house all digester-related pumps and HEXs.

In addition to the process buildings between each digester, a separate digester control building will be located between the pairs of digesters. This building will house the primary electrical room for the digesters, as well as the new boilers and hot water pumps that will replace the existing units in the current Digesters 1 and 2 complex. These boilers are at the end of their useful life and are located in a room that is no longer code compliant with current NFPA 820 standards. A separate control building will allow for electrical and boiler infrastructure separated from the digester tanks (see Section 7).

Figure 5-6. Proposed digester area layout

5.2.2 Digester Covers

The two existing digesters at CKTP have fixed steel covers, last replaced in 1992. CKTP staff have identified the lack of digester gas storage as a challenge for digester gas management. The ability to store gas and control gas withdrawal flow rates could also allow CKTP to resume operation of beneficial uses for biogas (see Section 5.4), which requires a more constant influx of gas for optimal operations.

Considering those goals for improved digester gas management, three digester cover technologies were evaluated for the replacement of the existing digester covers and for installation on the new digesters:

- Fixed covers (steel or stainless steel)
- Floating covers (steel or stainless steel)
- Gas-holding membrane, as shown on Figure 5-7.

Table 5-6 summarizes the pros and cons of each proposed cover type. Additional information for each digester cover technology is provided in Appendix B.

Figure 5-7. Example of gas-holding membrane cover

Table 5-6. Pros and cons of digester cover alternatives

Digester cover option	Pros	Cons
Fixed	Simple design and maintenance	No real gas storage (if needed)
	Maximum options for mixing technologies	Need to maintain slow/minimal volume changes to better control biogas
	Access and protective valving mounted on top	
Floating	Modest gas storage flexibility	Odor control issues at seal
	Accommodates more rapid volume changes	More complicated and expensive design (moving parts)
	Access and protective valving mounted on top	Some limitations (or added complexity) for mixing options
Membrane	Larger gas storage properties	Most limited mixing technology options
	Simple design	More regular cover replacement and equipment maintenance
	Flexible with liquid level	Limits access and piping to sidewalls

During workshops with CKTP staff, it was decided to proceed on the design considering fixed steel covers for replacement of the Digesters 1 and 2 covers and membrane covers for installation on Digesters 3 and 4. The reason for that decision is the improved gas storage flexibility that two membrane covers would allow for, while maintaining the simpler operation and maintenance of two fixed covers on the existing digesters. The option for the membrane covers installed on the new digesters is tentative and will be

evaluated further as part of the detailed structural analysis of the existing digesters. It is possible that the gas-holding membranes may be located on Digesters 1 and 2, with fixed covers on Digesters 3 and 4, if this better suits the final design. This does not affect the overall selection or operation of the system, and for the purposes of this report, the BOD proposes the following:

- **Digesters 1 and 2 (rehabilitated):** fixed steel covers
- **Digesters 3 and 4 (new):** gas-holding membrane

Although each digester pair will feature different cover types, they will work in conjunction for gas storage purposes. The headspace of all digesters will be connected via a common header that will allow for gas produced in Digesters 1 and 2 to flow to the headspace of Digesters 3 and 4, where increased storage capacity will be available with the membrane covers. Additional discussion on how each cover type is intended for the proposed digesters at CKTP follows.

Fixed Steel Covers

CKTP staff are familiar with fixed digester gas covers as the existing digesters at CKTP are installed with this cover type. Operation and maintenance required for these covers are minimal and simple, and the only major repair is for recoating every 10 to 20 years.

Gas-Holding Membrane Covers

Gas-holding membrane covers consist of a double-layered polyvinyl chloride (PVC)-coated polyester cover that can provide storage for a large volume of gas and accommodate gas volume variations. The inner layer holds digester gas above the sludge level and expands as digester gas is produced, while the outer layer maintains the cover shape and withstands environmental conditions. The annulus space between the membrane layers is maintained by a fan system (duty and standby units for each cover) that blows ambient air to maintain a threshold pressure on the outer layer; fans also blow air to fill space when the inner layer deflates because of sludge or digester gas withdrawal. When digester gas is produced and the inner layer compresses the annulus volume beyond the pressure threshold, an air purge line connected to the annulus space allows for excess air to be released. Preliminary P&IDs included in Appendix F show in more detail the auxiliary components that are part of the gas membrane cover system. Figure 5-8 illustrates the auxiliary components for the gas-holding membrane cover located on the roof of a building adjacent to the digester tank, in a similar layout planned for CKTP.

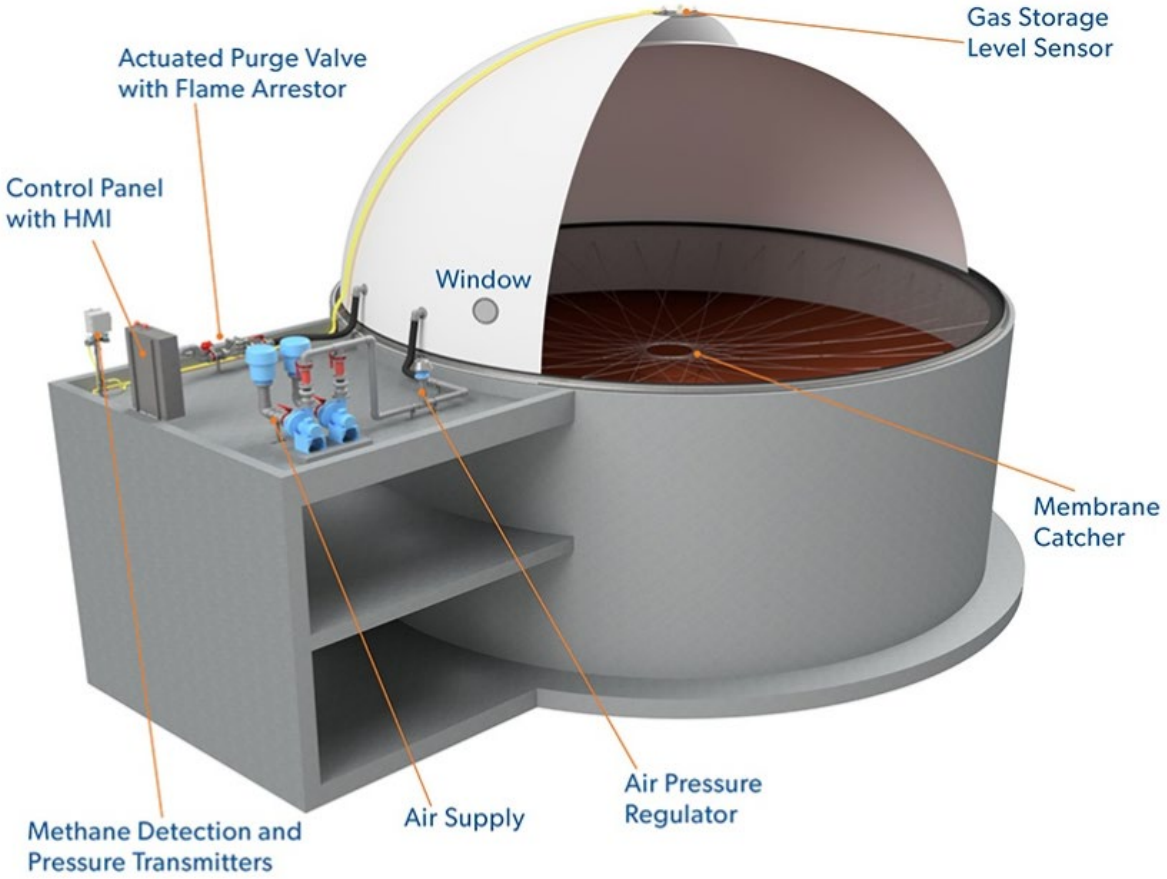

Figure 5-8. Example of gas-holding digester covers and auxiliary systems

The installation of membrane covers on Digesters 3 and 4 will allow for increased gas storage. Considering the 65-foot-diameter digesters, each membrane cover is estimated to hold approximately 60,000 ft^3 of gas storage, and a higher capacity could be achieved if the membrane is designed for a higher operating pressure. Based on CKTP gas production data from 2018 to 2020, the daily average total gas production was approximately 94,000 ft^3. Considering those gas production rates, the membrane covers on Digesters 3 and 4 will hold approximately more than 1 full day of digester gas production. Additional gas storage information is summarized on Table 5-7.

Table 5-7. Gas storage capacity from Digesters 3 and 4

Parameter	Value	Comments
Gas production data		
Average monthly gas yield	2,842,000 ft^3	Monthly averages from 1/2018 to 12/2020
Average daily gas yield	94,730 ft^3	Calculated from monthly averages
Gas storage capacity on Digesters 3 and 4		
Total gas storage volume (Digesters 3 and 4)	120,000 ft^3	Approximate value[a]; higher capacity available
Storage in hours of gas yield	30 hr	

a. Storage volume based on a cover operating pressure of 15 in. w.c. Specific storage volume varies for different cover manufacturers.

5.2.3 Digester Feed Strategy

Existing Digesters 1 and 2 receive solids via three separate streams: TPS and septage pumped from the existing GTs, blended TWAS from CKTP and other satellite facilities via the WAS-thickening building, and scum and FOG conveyed from the primary clarifier scum boxes.

Current operations alternate the feeding of these influent streams between the digesters for a somewhat consistent feed rate and composition of DIG. However, some of those streams, such as scum/FOG, are fed to a single digester for a prolonged period before being routed to another digester, which can cause inconsistency in the loading of a digester from month to month. The LHW upgrades are designed to improve this feature by allowing consistent, slow, steady feeding of each digester on a daily basis, allowing for as smooth an operation as possible given the variables that can be controlled by CKTP staff.

During workshop discussions a few digester feed strategies were discussed. CKTP staff have identified septage as potentially problematic for co-digestion, and a septage-only digester was evaluated. However, that approach was discarded because of the operational complications, such as maintaining two different digester operations, and because septage hauls are an unpredictable flow stream, and therefore CKTP would lack the ability to control and maintain a consistent influent feed rate. Although CKTP staff did not select a septage-only digester to move forward into design, the current project improvements anticipate other provisions to mitigate the issues with co-digesting septage; those improvements, discussed in Section 3, include EQ tanks where septage loads can be blended and monitored before being sent for thickening and digestion.

Two digester feed strategies, described below, were evaluated.

Centralized Feed

All solid streams would be sent to a common holding tank prior to pumping to digesters. Sludges would be mixed inside the tank for homogeneity, and a set of pumps would route the mixed sludges to each digester.

Individual Feed Control

Sludge feeding into each digester would be controlled by the totalized flow measured by flow meters and motorized valves at each digester connection. For instance, TWAS flows pumped from the TSBT would be routed to Digester 1 until a defined set point volume is achieved. Once that predetermined sludge volume is met, the motorized valve at the TWAS connection to Digester 1 closes and the valve at the TWAS line to Digester 2 opens, then routing the same volume of TWAS to Digester 2. The same process occurs until equal volumes of TWAS are routed to all digesters before feeding TWAS again to Digester 1. This process would be similarly done to all solid streams being fed to the digesters (PS/septage, scum, FOG).

During workshop discussions (Appendix A) the alternative for individual feed control was selected to move forward into design, as this provides both redundancy and a high degree of flexibility in flow and loading control. Preliminary P&IDs provided in Appendix F show the flow meters and control valves for each solids stream routed to the digesters. Those valves will open and close based on flow meter signals so that flows are equally distributed between the digesters.

5.2.4 Digester Mixing System

Digestion mixing is an essential process for optimal digester operation as it prevents septicity and promotes uniformity of the sludge, as well as minimizes gas entrainment to allow for steady and consistent gas production rates while reducing the risk of gas entrainment and rapid level rise. The current digesters use a form of pumped mixing technology with a dedicated pump per digester and recirculates flow within the tank. Along with an updated (more efficient) version of this type of mixing for the new and rehabilitated tanks, other mixing technologies were considered for the digester retrofits and upgrades:

- Linear motion (LM) mixer
- Pumped (Vaughn Rotomix)
- Submersible turbine

Table 5-8 summarizes the pros and cons of the evaluated alternatives for digester mixing technologies. Appendix B includes the fact sheets with additional information on each technology, including primary vendors and equipment.

Table 5-8. Pros and cons of digester mixing alternatives

Digester mixing options	Pros	Cons
Linear motion	Simple system with easy repair. Low risk of failure.	Single point of failure for mixing
	Workable with fixed and floating covers	Crane for full removal
	Moderate mixing for standard mesophilic digester	Sole source
	Can be specified with combined cover/mixer unit responsibility	Minimal adjustment once installed
Pumped	Equipment located at “ground” level. Relatively easy to maintain with typical pump/valve O&M.	Nozzles can clog and/or create low pressure zones that promote struvite formation
	Options for redundancy	High horsepower (energy load) requirements
	No moving parts in digester	More regular maintenance
	Moderate mixing for standard mesophilic digestion	Added footprint to digester pump building
Submersible	High mixing rate (best velocity and tank coverage)	Single point of failure for mixing
	Flexible positioning of mixer for adjustment at different operating levels	Sole source
	Full removal of system relatively easy. Built-in access to tank components.	More complex cover design coordination
	Workable with fixed or gas-holding cover	Motor and cables go in the liquid

During workshop discussions with CKTP staff, an upgrade pumped mixing system was selected. The reasoning for this decision includes the flexibility of using this technology with both digester cover types (fixed and membrane covers), familiarity of staff with the equipment, and ability to have a swing pump in place, for redundancy or easier maintenance of duty pumps.

The proposed pump mixing design for the rehabilitated Digesters 1 and 2 and new Digesters 3 and 4 uses three chopper pumps per pair of digesters in a 2+1 configuration to recirculate sludge via four nozzle assemblies installed around the digester walls. A foam buster nozzle will be installed slightly above the digester maximum operating level with a dedicated feed line and motorized valve, so that it can be used as needed to prevent and mitigate foam formation inside the digesters. An ultrasonic level sensor will be provided for the fixed-cover digesters to help identify the formation of foam and indicate when the foam buster nozzles may need to be used. Additional information on the proposed pump mixing design is provided in Table 5-9. The mixing pumps and related instruments are shown in more detail on the P&IDs, provided in Appendix F. Figure 5-9 shows an example of the chopper pump intended for the mixing systems, and

Figure 5-10 depicts the preliminary layout for the mixing nozzle configuration at the CKTP digesters.

Table 5-9. Digester mixing system design parameters

Parameter	Value	Comments
Pump type	Chopper pump	
Number of units per digester pair	2 duty + 1 standby	
Motor hp	60 hp	
Rated flow rate	3,600 gpm	
Number of nozzles per digester	6 standard + 1 foam buster	

Figure 5-9. Example of chopper pump intended for digester mixing system

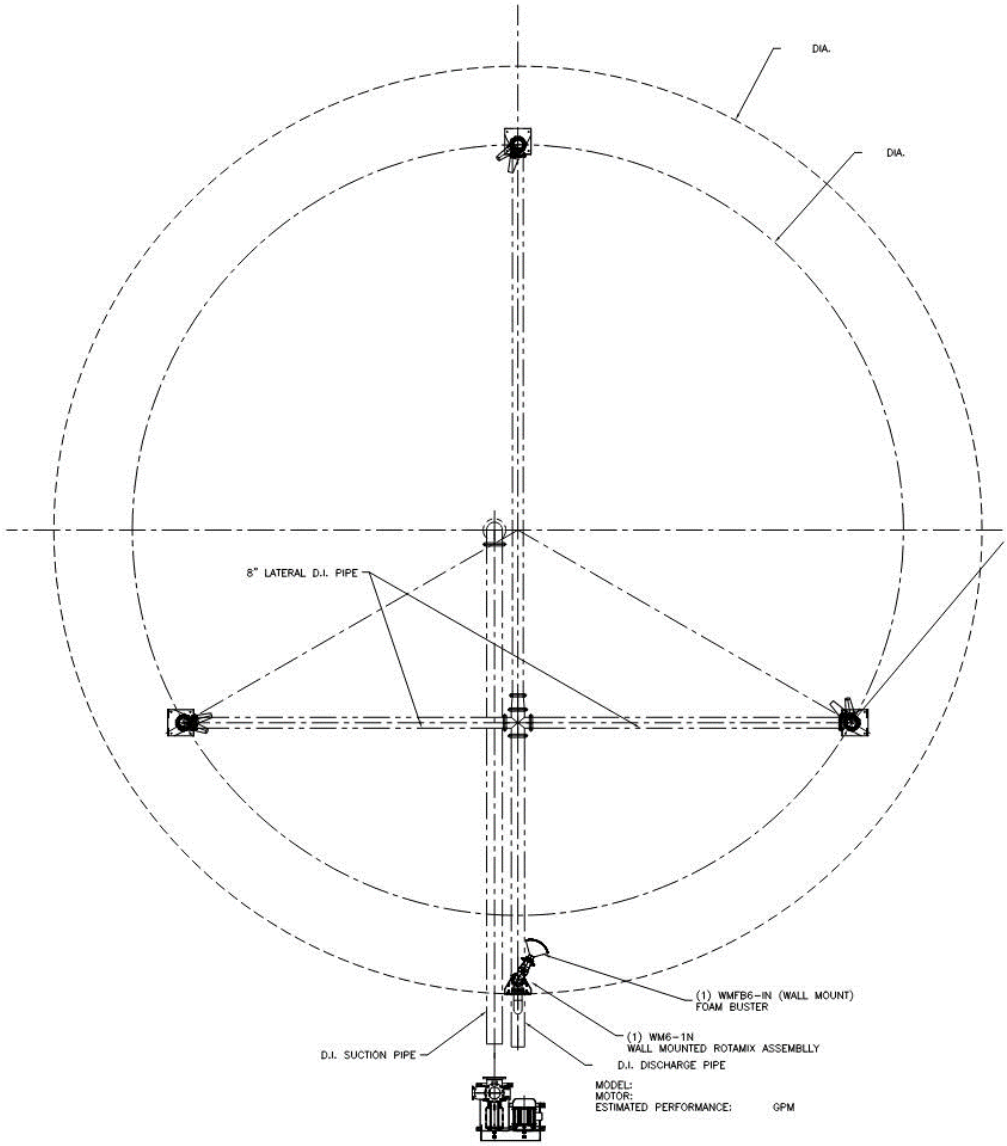

Figure 5-10. Preliminary mixing piping and nozzle layout

5.2.5 Digester Heat Demand

The primary demand for the new boilers that will be located in the digester control building will be the load required to maintain temperature in each of the four digesters. The heat input required (in million British thermal units per hour [MMBtu/hr]) to operate the digesters at the optimal operating design temperature of 98 degrees Fahrenheit (°F) is the target BOD. The digester heat input requirement considered two major sources:

1. The heat input required to raise the digester feed temperature to the design operating temperature.

   Heat input (MMBtu/hr) was calculated using the heat capacity equation, $Q = mc\Delta T$, where:

a. m = maximum month digester feed mass flow rate, lb/d

b. c = specific heat, 1 BTU/lb-°F (assumed equal to water)

c. ΔT = temperature differential between digester feed and operating digester temperature, °F

2. The heat losses from the digesters to the environment.

   Heat loss (MMBtu/hr) was calculated using the heat transfer equation, q = UAΔT, where:

   a. U = coefficient of heat transfer, Btu/h-ft^2-°F

   b. A = cross sectional area of heat loss, ft^2

   c. ΔT = temperature differential across surface, °F

Distinct areas of coefficients of heat transfer (U), cross-sectional area of heat loss (A), and temperature differential across the surface (ΔT) are shaded and labeled on digester diagrams in Figure 5-11 and Figure 5-12 for the existing and new digester designs. Heat loss was calculated for each unique combination of U, A, and ΔT on the digesters and then totaled.

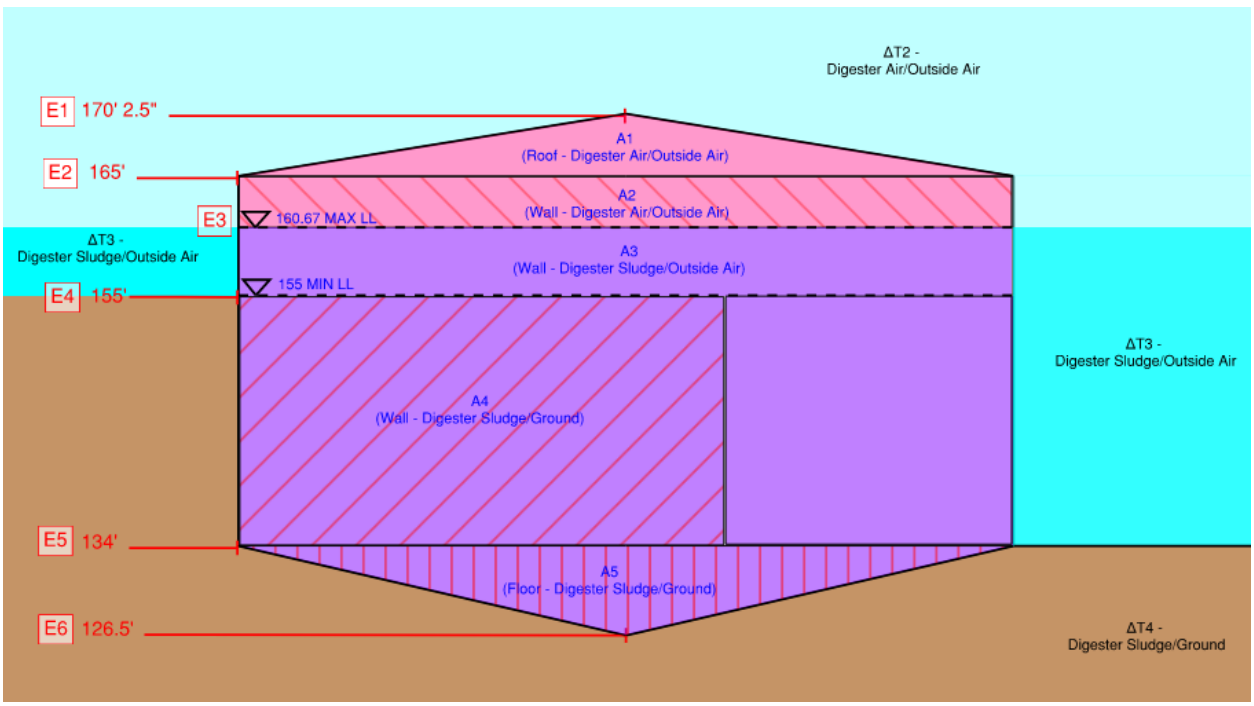

Figure 5-11. Existing digester heat loss calculations supporting diagram

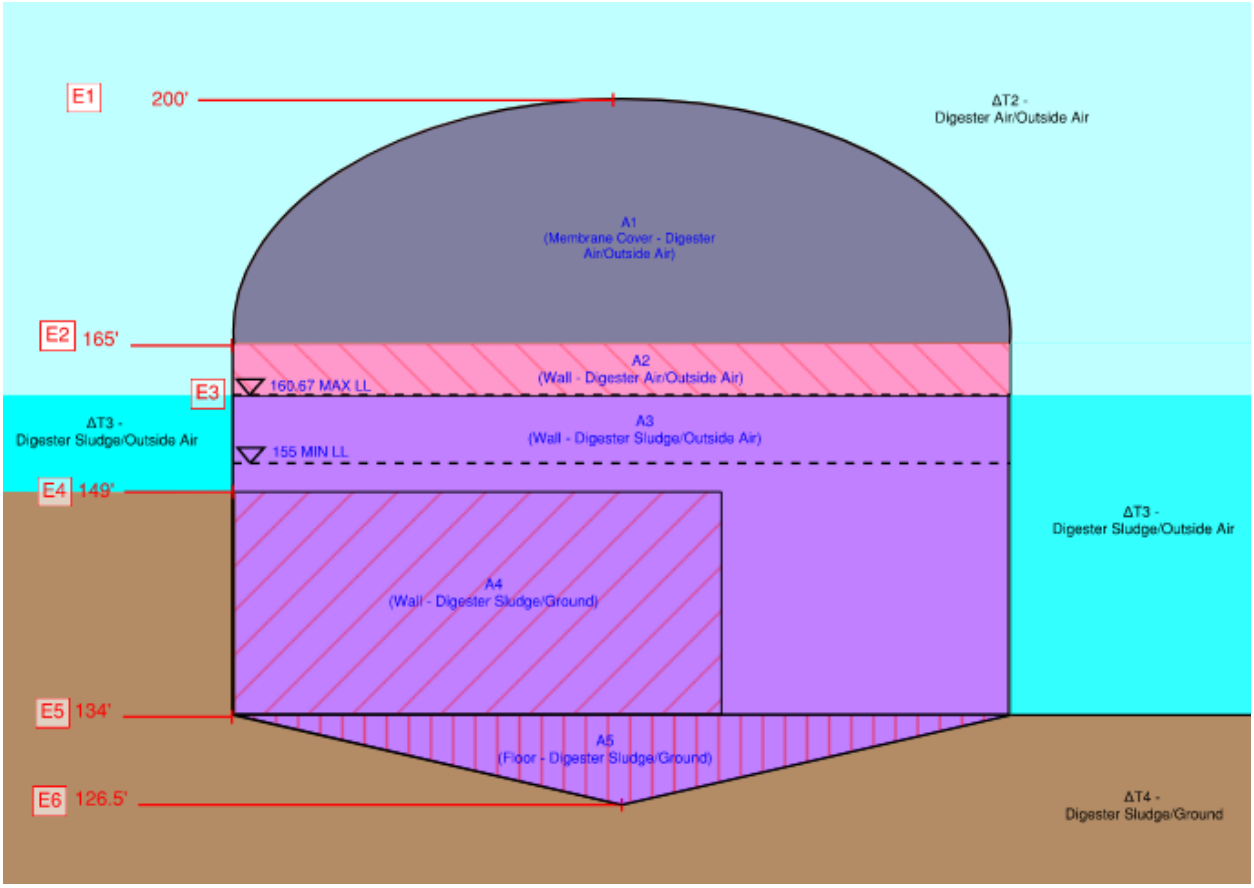

Figure 5-12. New digester heat loss calculations supporting diagram

The heat input requirement was calculated on a per-digester basis for different temperature conditions (winter and summer) and different projected flows and loads (2028 and 2042 projections). The minimum condition was considered to be all four digesters operating in summer conditions at 2028 AAF; the maximum condition was considered to be Digesters 3 and 4 operating in winter conditions at 2042 MMF. Table 5-10 and Table 5-11 present a detailed summary of the calculated heat input requirement for the minimum and maximum condition, respectively.

Table 5-10. Minimum heat input requirement

Heat input requirement	Value	Unit
(1) Heat input required to raise the digester feed temperature to the design operating temperature		
Heat transfer, per digester (MMFs)	2,684,100	Btu/d
Heat transfer, per digester w/ heat transfer efficiency	2,982,400	Btu/d
	0.124	MMBtu/hr
(2) Heat losses from the digesters to the environment		
Existing Digesters 1 and 2		
1. U1*A1*ΔT2 (roof area: digester air/ outside air)	308,000	Btu/d

Heat input requirement	Value	Unit
2. U2*A2*ΔT2 (wall: digester air/outside air)	108,000	Btu/d
3. U2*A3*ΔT3 (wall: digester sludge/ outside air)	270,500	Btu/d
4. U3*A4*ΔT4 (wall: digester sludge/ground)	979,100	Btu/d
5. U4*A5*ΔT4 (floor area)	475,800	Btu/d
Total heat losses per digester	2,141,400	Btu/d
	0.089	MMBtu/hr
New Digesters 3 and 4		
1. U5*A1*ΔT2 (roof area: digester air/ outside air)	1,534,900	Btu/d
2. U2*A2*ΔT2 (wall: digester air/outside air)	108,100	Btu/d
3. U2*A3*ΔT3 (wall: digester sludge/ outside air)	343,300	Btu/d
4. U3*A4*ΔT4 (wall: digester sludge/ ground)	798,600	Btu/d
5. U4*A5*ΔT4 (floor area: digester sludge/ground)	475,800	Btu/d
Total heat losses per digester	3,260,700	Btu/d
	0.136	MMBtu/hr
Total heat losses		
Total heat losses (all digesters)	10,804,000	Btu/d
	0.450	MMBtu/hr
(1) + (2) total heat demand		
Minimum total heat demand for one digester	5,123,700	Btu/d
	0.213	MMBtu/hr
Total heat demand (annual average); for all 4 digesters in operation	22,733,200	Btu/d
	0.947	MMBtu/hr

Table 5-11 Maximum heat input requirement

Heat input requirement	Value	Unit
(1) Heat input required to raise the digester feed temperature to the design operating temperature		
Heat transfer, per digester (MMFs)	14,741,100	Btu/d
Heat transfer, per digester w/ heat transfer efficiency	16,379,000	Btu/d
	0.682	MMBtu/hr
(2) Heat losses from the digesters to the environment		
New Digesters 3 and 4		

Heat input requirement	Value	Unit
1. U5*A1*ΔT2 (roof area: digester air/ outside air)	2,728,300	Btu/d
2. U2*A2*ΔT2 (wall: digester air/outside air)	192,100	Btu/d
3. U2*A3*ΔT3 (wall: digester sludge/ outside air)	610,100	Btu/d
4. U3*A4*ΔT4 (wall: digester sludge/ ground)	798,600	Btu/d
5. U4*A5*ΔT4 (floor area: digester sludge/ground)	475,800	Btu/d
Total heat losses per digester	4,804,900	Btu/d
	0.200	MMBtu/hr
Total heat losses		
Total heat losses; for digesters 3 and 4 in operation	9,609,700	Btu/d
	0.400	MMBtu/hr
(1) + (2) total heat demand		
Minimum total heat demand for one digester	21,183,800	Btu/d
	0.883	MMBtu/hr
Total heat demand (max month); for digesters 3 and 4 in operation	42,367,600	Btu/d
	1.765	MMBtu/hr
Total heat demand (max month); for all 4 digesters in operation	47,717,800	Btu/d
	1.99	MMBtu/hr

The minimum and maximum heat demand per digester (0.213 to 0.883 MMBtu/hr) provide a basis for the digester HEX sizing as outlined in the following section. The maximum heat loads (max month winter 2042, all four digesters in operation) for digester feed (1.365 MMBtu/hr) and environmental losses for all four digesters (0.623 MMBtu/hr) were used to size the boilers (total load of 1.99 MMBtu/hr) (see Section 7).

5.2.6 Heat Exchanger and Recirculation Pumps

CKTP currently uses spiral HEXs to maintain proper digester sludge temperature and rotary-lobe pumps to recirculate sludge in the digesters.

To date, the HEXs at CKTP have worked well and have not experienced issues with clogging, which can occur with this HEX design. Therefore, a spiral HEX will be used for the upgrade (Figure 5-13), as it allows for an efficient footprint and ease of access. Typical vendors include Gooch and Alfa Laval.

Figure 5-13. Gooch thermal GTS Type 1-DO sludge spiral heat exchanger

The proposed HEX design is presented in Appendix F, Drawings P-623 and P-643, and in a schematic in Figure 5-14. Sludge is pumped from the digester, through a recirculation pump, followed by the spiral HEX. The sludge pump maintains a constant flow from the digester. The hot water is managed by a primary and secondary hot water loop, via the boiler, controlled by three-way valves. The primary boiler loop is maintained at a return temperature of 150°F, while the secondary loop for the digester HEX is controlled to a maximum 135°F inlet temperature via the three-way valve and the local loop pump. A temperature gauge on the discharge of the HEX recirculated-sludge line signals to adjust the control of a three-way valve, which operates the flow of hot water into the HEX to achieve an operating sludge temperature of 104°F.

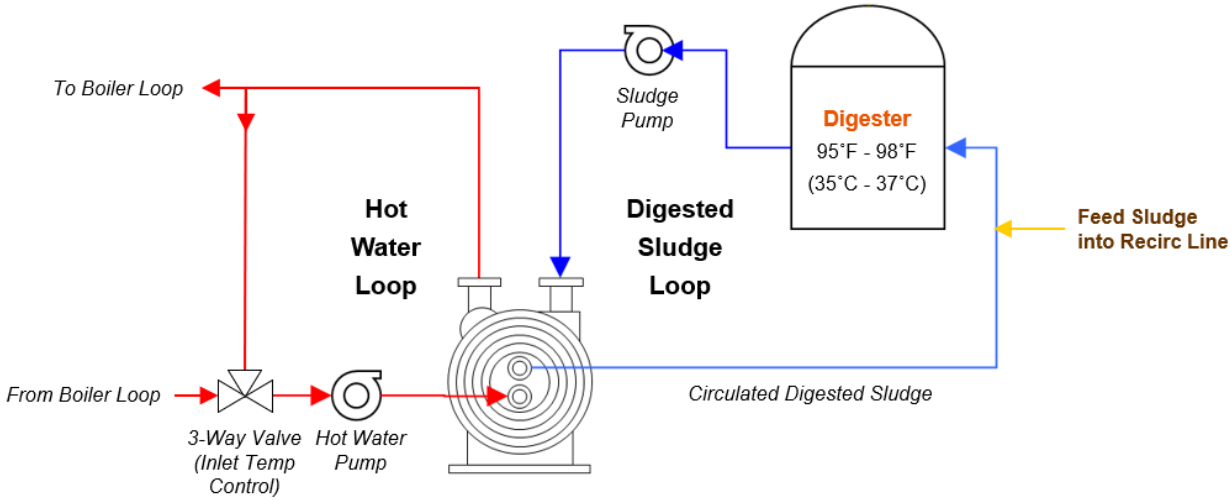

Figure 5-14. HEX process flow diagram

The proposed design uses rotary-lobe pumps to recirculate sludge from each digester through its respective HEX. These pumps are preferable over alternative types because they have a small footprint, are easy to service, and are reliable for maintenance and longevity at lower pressures (less than 50 pounds per square inch gauge [psig]). Figure 5-15 displays rotary lobe pumps of three typical vendors in the industry: Boerger, Netzsch, and Vogelsang. These pumps would use flush-less seals for simplicity and to minimize water use.

Figure 5-15. Typical rotary-lobe pump (left to right: Boerger, Netzsch, Vogelsang)

The calculated minimum and maximum heat input requirements were used to size the minimum and maximum mass flow rates (in gpm) for hot water and sludge recirculation. These were calculated using the thermodynamic equation, $Q = mC\Delta T$, and solving for m, where:

- Q = heat requirement, MMBtu/hr
- m = mass flow rate, gpm
- C = specific heat, 1 Btu/lb-°F (assumed equal to water for both water and sludge)
- ΔT = temperature differential, °F

The design criteria presented in Table 5-12 were used to size equipment.

Table 5-12. Summary of digester sludge heating design criteria

Design criterion	Maximum winter 2042	Unit
Digester heat input	0.883	MMBtu/hr
Hot water flow rate	160	gpm
Sludge recirculation flow rate	200	gpm
Hot water inlet design temperature	135	°F
Hot water return design temperature	123	°F
Input sludge temperature	95	°F
Sludge operating temperature	104	°F

For the hot water loop, a HEX efficiency of 90 percent was assumed; it was assumed that 10 percent of the heat provided by the hot water loop will be lost to the environment. The temperature differential for the hot water loop was assumed to be 12°F, and for the sludge recirculation it was assumed to be 9°F.

From these calculations, the hot water flow rate to the HEX and the sludge recirculation flow rate were determined. Preliminary design criteria for the HEX and sludge recirculation pumps are presented in Table 5-13. The sludge recirculation pump would operate at a single flow; however, the available range of the pump is shown for reference.

Table 5-13. HEX and sludge recirculation pumps preliminary design criteria

Design criterion	Value	Unit
HEX		
Hot water flow rate	160	gpm
Sludge recirculation pumps		
Pump type	Rotary lobe	-
Sludge recirculation flow rate	200	gpm
Design TDH	30	psi
DIG % solids	3	%
Approximate motor size	10	hp

5.2.7 Sludge Transfer Pumps

The design criteria of the digester transfer pumps, which serve to both transfer digester contents between tanks and send DIG to the existing centrifuge dewatering systems, are based on a comparison between the summer 2023 rheology data acquired from CKTP and typical assumption values through various fits for each data set. The most conservative values were chosen for the design criteria. Preliminary pipe routes and fittings were also assumed at this stage of design, and various models were used for evaluation. Each scenario was assessed at the observed solids concentration (2.1 percent), max design concentration (4.0 percent), and an additional safety factor solids concentration (6.0 percent). The modeled scenarios are summarized in Table 5-14.

Each pair of digesters will have two transfer pumps in their associated control building with redundant piping to connect both digesters to each pump. These pumps will pull from the digesters and pump to the centrifuges in the SPB. In addition, these pumps will have connections to the other set of digesters for the option to run sequenced digestion.

Table 5-14. Digester transfer pump evaluation at 250 gpm

Model		Observed data, Power Law fit	Observed data, Bingham Plastic	Typical industry rheology coefficients, Bingham Plastic	Observed data, Herschel-Buckley
Value	**TS (%)**	**Total dynamic head (ft)**			
Observed	2.10	42.9	41.4	41.0	43.0
Typical	4.0	42.9	41.3	48.1	42.9
Maximum	6.0	42.8	41.3	57.0	42.8

Preliminary design criteria were based off the highest expected TDH. The typical values are based on extrapolated data, similar to those based on our observed data. Therefore, pump design does not always have to accommodate these values if they are deemed unreasonable. In this case, no major outliers are present.

Preliminary design criteria are shown in Table 5-15, which are based on the expected flows to the centrifuge, the modeling exercise for TDH values, and an added safety factor. Two more instances of rheology testing will be conducted in early 2024 to collect winter data on this sludge. Therefore, final design criteria will be adjusted as needed to accommodate this additional information.

Table 5-15. Sludge transfer pump preliminary design criteria

Design Criterion	Value	Unit	Notes
Pump type	Progressive-cavity, 2-stage	-	Minimum of a 2-stage pump for those with a TDH of > 50 psi
Design flow	250	gpm	Based on minimum solids concentration
Design TDH	100	psi	Based on modeled TDH plus safety factor
Approximate motor size	40	hp	Based on vendor feedback

These new sludge transfer pumps are conservative in comparison to the existing sludge transfer pumps. The existing pumps are rated for 150 gpm at 50 psi.

5.3 Digester Facility Layout

The proposed digester facilities will comprise of two pairs of digesters with a process building between each pair, and a separate digester control building, which will serve all four digesters. The two existing digesters will be maintained at the same location and extensively rehabilitated, including replacement of digester covers, all process equipment (mixing system, recirculation and HEXs, withdrawal pumps), and structural repairs, as needed. Figure 5-16 shows the proposed digester facility layout; digesters, process buildings, and digester control building are outlined in blue for clarity.

The existing building between the digesters will be demolished and reconstructed without sharing walls with the digester tanks, allowing the new building to be unclassified per NFPA 820. The process building for the new digester pair will be constructed similarly and match dimensions of the reconstructed process building. Both process buildings will house most of the digester-related pumps and auxiliary equipment for each digester pair. Each building will include three mixing pumps, two transfer and centrifuge feed pumps, two recirculation pumps at the lower level, and two HEXs and digester feed control valves at the upper level. The blower system for the gas-holding membrane covers will be installed at the roof of the process building between the new digester pair. At the roof of both process buildings a walkway will connect to the digester covers. Similarly to the building between the existing digesters (current digester control building), both new process buildings will have direct access at the lower and upper levels, on opposite sides of the building, because of the site grade. Two staircases inside the process building will connect the lower and upper levels, and one of the staircases will continue to the roof. Figure 5-17 shows a section of the three-dimensional (3D) model for a pair of digesters

and process building, showing the different levels of the building, staircases, and walkways to digester covers.

The new digester control building will be constructed south of the existing digesters and west of the new digester pair. The building will include a boiler room, which will house boilers and hot water recirculation pumps besides other mechanical equipment as discussed in Section 7, and an electrical room.

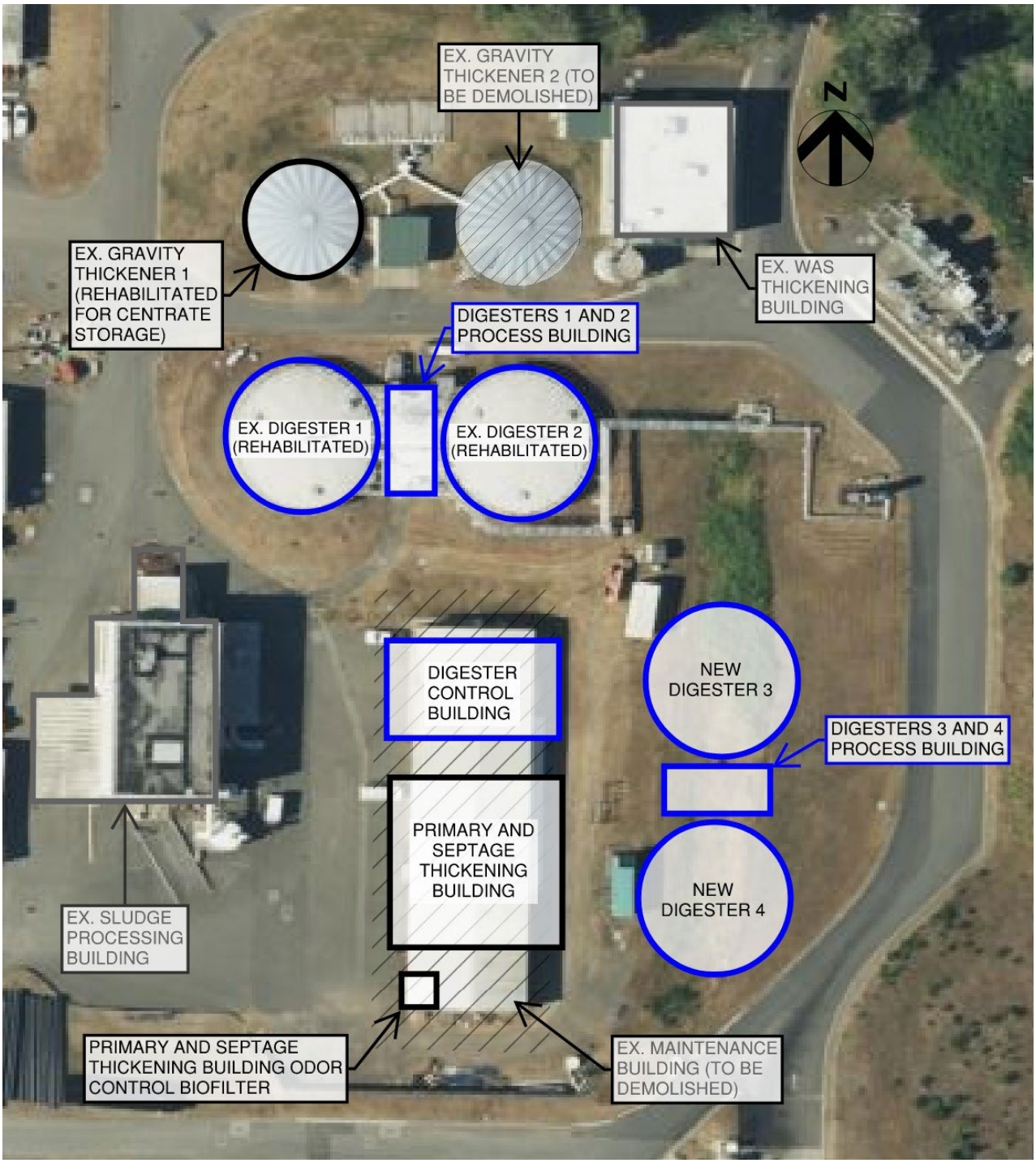

Figure 5-16. Digester facility area

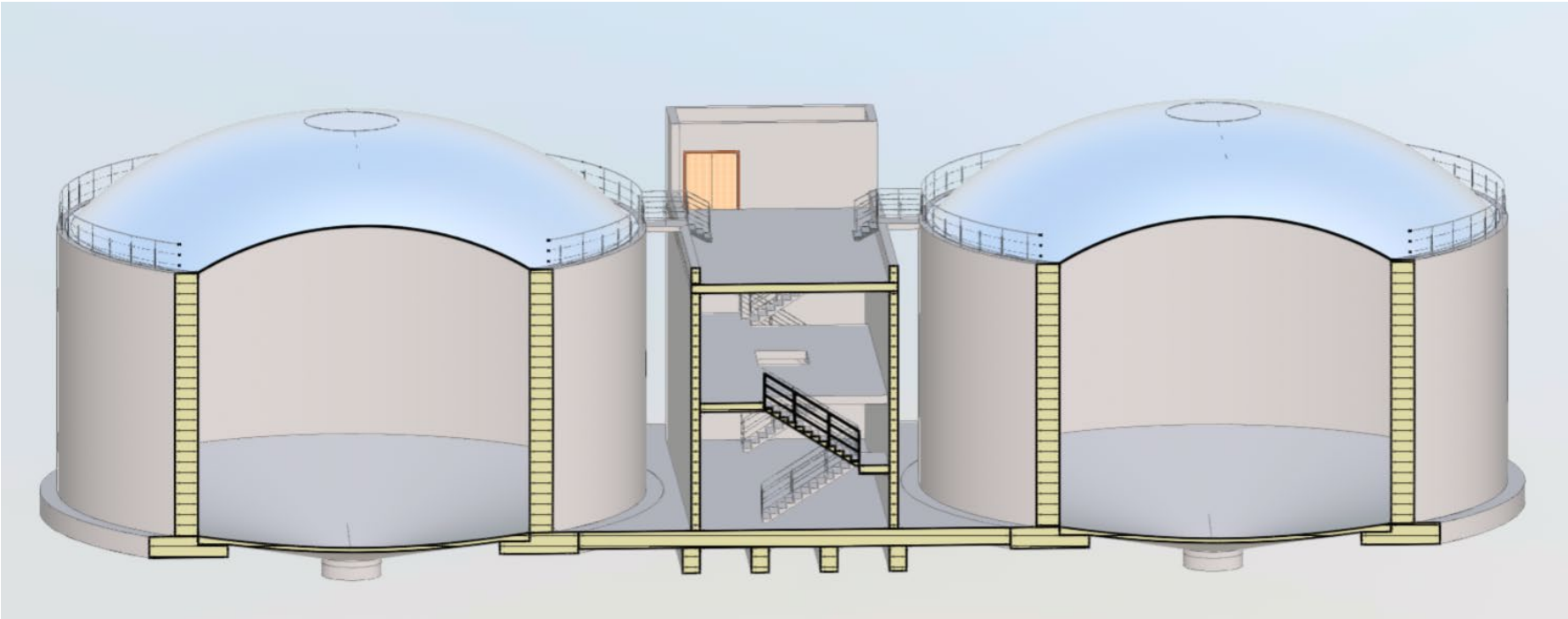

Figure 5-17. Section view of digester pair and process building

This page is intentionally left blank.

5.4 Biogas Handling and Treatment

Currently, biogas from the existing digesters has two potential pathways for use/disposal: waste gas burner (WGB) flare system, or a cogeneration treatment process that includes combined heat and power (CHP) equipment. Both systems were upgraded/installed as part of the larger expansion of the biological treatment facilities in 2012–2016, which included construction of the existing WAS-thickening building.

The CHP system includes pressurization blowers, gas treatment (hydrogen sulfide [H_2S] and siloxane removal scrubbers), as well as the engine-generator and various pieces of heat recovery equipment. See Figure 5-18. Because of operations and maintenance (O&M) difficulties, the system has been offline for several years and is currently not in use.

Figure 5-18. Existing CHP system with engine-generator and pretreatment H_2S and siloxane scrubbers

The WGB currently processes all of the CKTP biogas through a common sediment/moisture trap and into an enclosed flare (Varec model 244E) (see Figure 5-19). The flare pilot light is supplied via an aboveground propane tank because of the lack of natural gas (NG) within the CKTP boundary.

Figure 5-19. Existing waste gas burner with propane pilot (yellow piping in foreground) that will be updated to natural gas

The existing WGB with propane pilot (yellow piping in foreground in Figure 5-19) will be updated to NG.

Modifications to the biogas use/disposal system, as part of the current project, are anticipated to be as follows:

1. The WGB itself is relatively new and is a modern enclosed flare design that represents the current standard approach for the industry. It is not expected that any immediate changes will need to be made to the WGB, with the one exception of connecting the pilot flare to NG. As part of this project, a new NG utility service will be brought to CKTP and this will provide an opportunity to install a less expensive and more reliable gas service for the WGB pilot. Both the new and existing digesters will be tied into the existing flare system with a new sediment/moisture trap for the Digesters 3 and 4 complex.
2. The WGB support frame has a series of support welds at the base that appear to be failing and will be reviewed as part of the detailed design to determine potential methods of repair.

3. The CHP equipment is currently under review to determine if the system can be salvaged or modified to place it back into service. If the unit can be salvaged, the necessary modifications will be included in the final design of the project. If the system cannot be reused, it will be demolished and CKTP will begin a process of looking for alternative beneficial-reuse options to be designed as part of a future project.

6 Miscellaneous Support Systems

This section describes miscellaneous support systems that are being designed as part of this project. This includes the IPS, centrate equalization and storage, odor control, and miscellaneous pumping systems.

6.1 In-Plant Pump Station

The IPS at CKTP has experienced capacity issues with both the volume of the wet well and the existing submersible pumps. This section of the report analyzes the current inflows to the IPS and changes to those inflows. The projected inflows to the IPS (Table 6-1) consist of the following with approximated flow rates.

The flows listed below where developed based on review with plant staff as well as estimates of potential overflow rates from tanks (such as digesters or centrate tanks). It should be noted that these flows are not a significant change from the current IPS. The IPS continues to serve all the same flows as it currently does, with minor exceptions as follows:

- The underflow from the existing GTs and septage grit treatment systems (thickening primary sludge and septage) is now replaced with the filtrate flow from the RDTs in the new thickening building (also thickening primary sludge and septage).
- The IPS will be able to slowly meter centrate back to the influent drain manhole at the front of the headworks building.
- The IPS will continue to feed the drain flows back to the maintenance hole in front of the headworks, where it can discharge through a 12-inch / 14-inch diameter gravity line to the grit tank effluent channel. This is the same location as the current IPS discharges, and the flows do not affect the screen or grit treatment systems. The forcemain from the IPS is a combination of 4-inch and 6-inch piping, and will be upgraded to a continuous 6-inch to reduce headloss on the new IPS pumps (discussed below). It is not anticipated that the changes to the IPS will affect the overall hydraulics of the headworks, as the flow capabilities remain the same order of magnitude as the existing station, but with a more robust installation.

Table 6-1. In-plant pump station influent flow summary

Input source	Assumed flows (gpm)
Aeration basins 1 and 2 drains, building drains/toilets, reclaimed-water filter reject backwash water	100
Digester overflow and centrate tanks overflow/metering	0–150
Thickened septage and primary sludge filtrate (replaces gravity thickener underdrain)	100–300
WAS building filtrate flow (RDT)	100–150

Because of the low elevation of the new primary and septage thickening building, the filtrate flows from that building will likely need to drain back to the IPS to be pumped to the front of CKTP. Consequently, the thickened septage and PS underflows from the existing GTs will be replaced with flows from the new thickening building. To provide both added capacity, as well as flexibility for turndown (to allow for steady flows and more consistent metering for centrate to the headworks, per Section 6.2), it is recommended that the new IPS be a triplex pump station (two pumps to handle max flow, with a backup, with a single pump for lower flow periods). Each of the three new IPS pumps will be initially sized for 500 gpm, for 1,000 gpm firm capacity.

The County has standardized on Flygt pumps for sewage wet well applications due to reliability, familiarity, and consistency with existing equipment. The local distributor for the Flygt pumps is Whitney Equipment Company, Inc. (WECI). HDR submitted a system curve to WECI for a pump selection that reflects the changing of the piping system from 4-inch to 6-inch diameter. This design decision was made because of the high flow velocities estimated with a system curve using 4-inch-diameter piping. Velocities calculated using the 4- and 6-inch-diameter piping system were approximately 14 and 5 feet per second (ft/s), respectively. Generally, velocities in piping systems should not exceed 10 ft/s, which resulted in replacing the 4-inch-diameter piping with 6-inch-diameter piping from the IPS wet well to the manhole adjacent to the headworks. Figure 6-1 below shows the pump and system curve with 6-inch-diameter piping. Table 6-2 below shows the selected pump specifications.

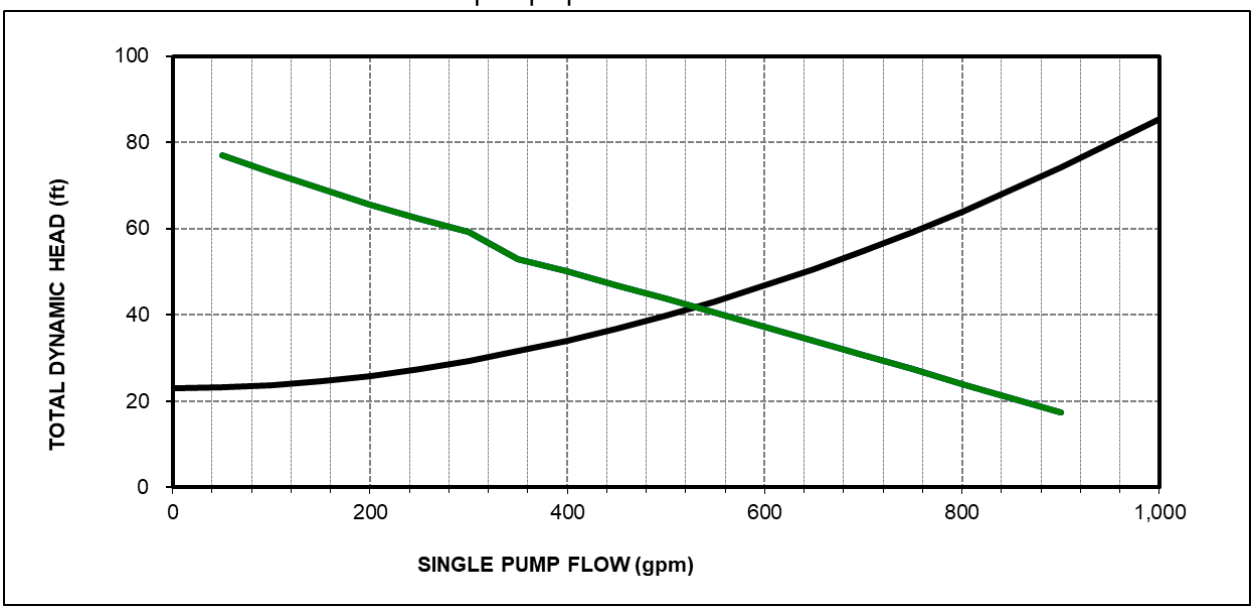

Figure 6-1. Pump and system curve

Table 6-2. Selected pump specifications (typical of 3)

Manufacturer	Xylem Flygt
Model	NP 3127 HT 3
Type	Submersible
Design flow rate (gpm)	500
Total dynamic head (ft)	39.6

Rated power (hp)	10
Rated speed (rpm)	1750
Rated current (amps)	13
Voltage (V)/phase/frequency (Hz)	460/3/60

The existing condition of the IPS wet well was reported to be very poor with eroded concrete in various locations inside the wet well. Therefore, a new wet well will be designed and constructed adjacent to the existing wet well. The current dimensions of the IPS wet well are approximately 6 feet in diameter and 14 feet in depth. The new IPS wet well will be designed with an increased diameter of 10 feet and maintain the 14 feet in depth. This will increase the volume of the wet well by approximately 175 percent and resolve the volume capacity issue. The conditions of the current valve vault were not reported, but because of the change in location of the new wet well, the valve vault and electrical panel will also be relocated. Figure 6-2 below shows an example placement of the new wet well and valve vault with associated rerouted piping for inflows and discharge. This example arrangement is for a duplex system to show the general approach; however, the IPS will be a triplex as shown on Drawing P-180 in Appendix F. The new wet well and valve vault will be coated for corrosion resistance and have an air outflow line from the top of the wet well for odor control.

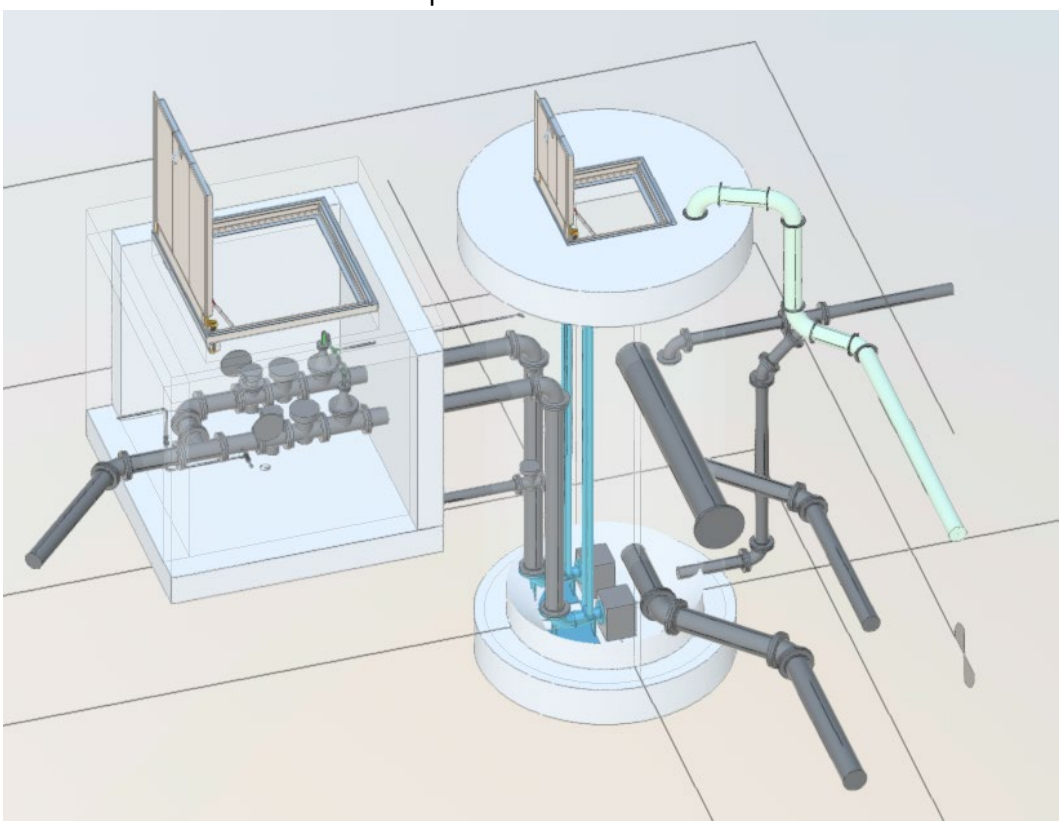

Figure 6-2. IPS general layout (duplex pump example)

6.2 Centrate Equalization and Storage

Centrate refers to the nutrient-rich liquid sidestream after dewatering digested solids. At CKTP, this centrate is produced by the centrifuges located in the SPB. During current

operation of a centrifuge cycle, the centrate is directed to a sump with approximately 20,000 gallons of capacity. A typical centrifuge run cycle produces approximately 75,000 gallons of centrate over a 10-hour period. Therefore, when dewatering, centrate must be discharged to preliminary or primary treatment, with little opportunity to equalize the flow and better manage nutrient loading (ammonia) to the secondary treatment system.

As the existing GTs will be taken out of service and replaced with RDTs, it is proposed to use the existing tankage of one GT to provide a location to equalize centrate flows and better manage nitrogen loading to the secondary treatment system. Under the assumption that all major equipment and functions, including the scum pit, will be demolished, the current capacity of one GT is roughly 270,000 gallons. This storage allows multiple cycles of centrate to be stored while metering of flows can occur independently over 24 hours or even multiple days.

The existing centrate sump, with new discharge pumps, will be used to direct flow from the centrifuges to the repurposed GT, now referred to as the centrate storage tank (CST). A new 6-inch-diameter line will be routed from the pumps out the north side of the SPB to the CST, as shown in Figure 6-3. Additionally, a new effluent port will be constructed at the base of the CST for discharge to the IPS, including an actuated plug valve and flow meter to allow for flow-paced metering of centrate. The existing GT overflow connection, which is also routed to the IPS, will remain in place. This effluent line is also depicted in Figure 6-3. The CST and flow control vault are shown in Figure 6-4.

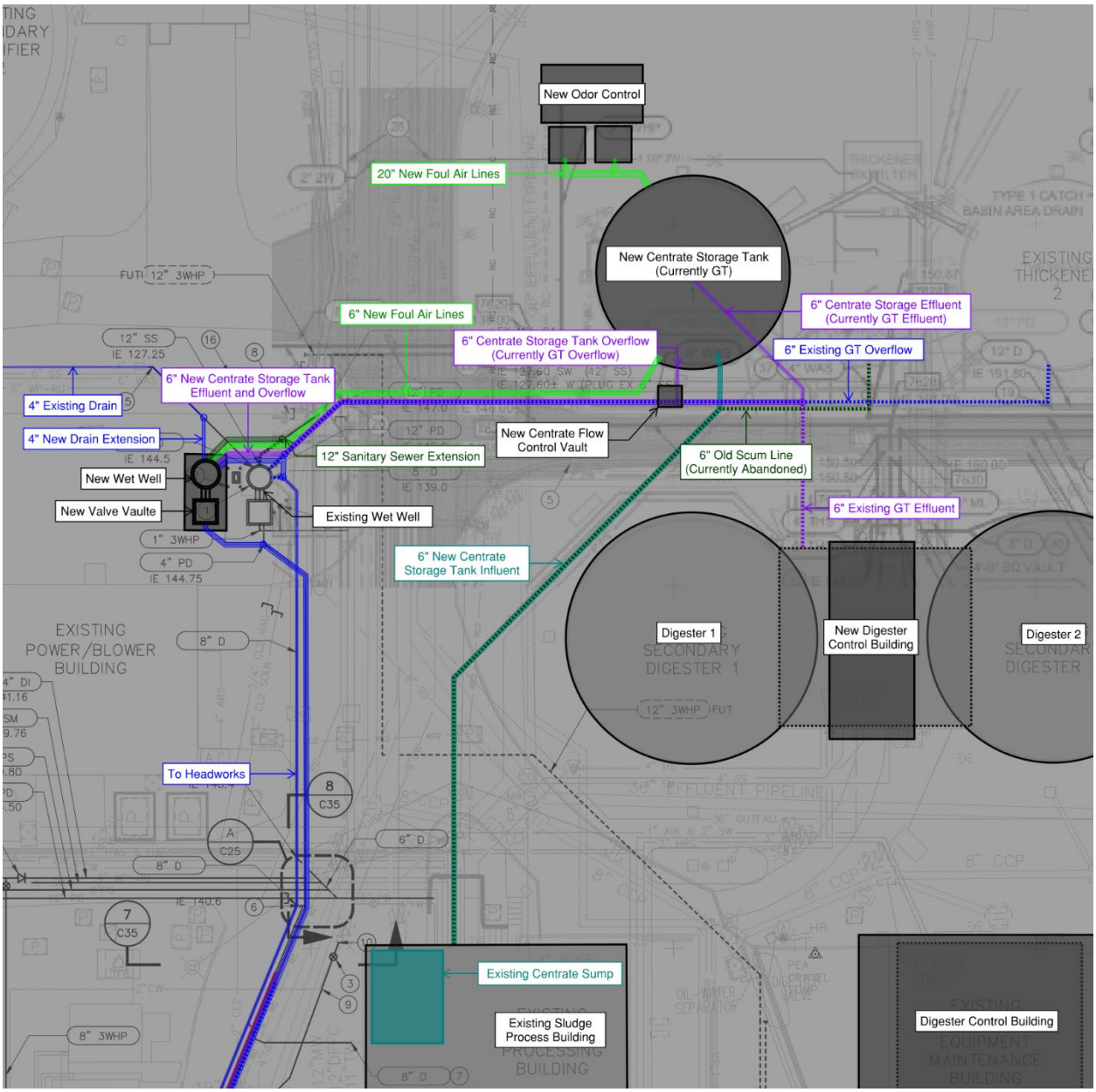

Figure 6-3. Centrate storage site piping

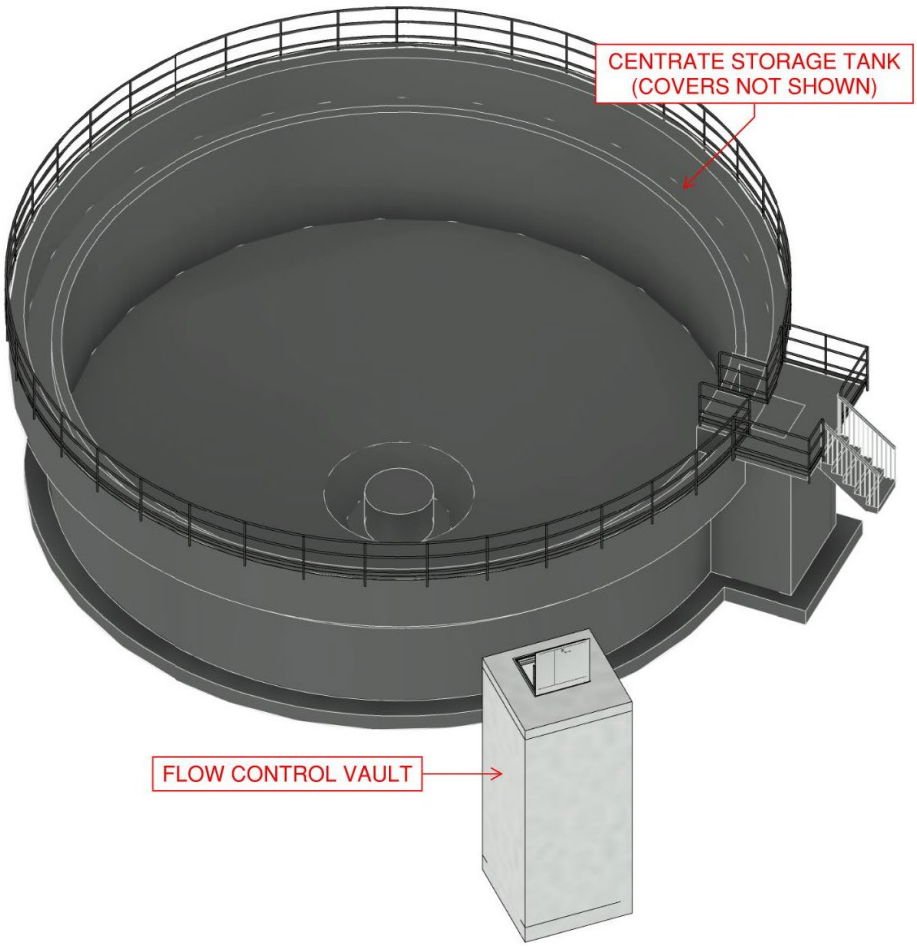

Figure 6-4. Centrate storage tank and flow control vault configuration

Overflow in the centrate sump connects to the existing septage sump in the SPB. This overflow sump has routing capabilities to connect to the existing centrate discharge at the headworks building. Therefore, the centrate will have two options for routing.

- The first option will be the existing route, in which the existing centrate pumps send flow directly to the headworks per the current routing from the PSB. The flow is discharged to the effluent channel of the grit treatment system. The existing septage pumps are no longer needed as part of the upgraded septage design and will be removed to allow for relocation of the existing centrate pumps within the same room in the PSB and to accommodate the new centrate pumps (second option noted below). This first option flow route represents the status quo and would not allow for equalization.
- The second option would be to use the new centrate pumps to pump flow to the new CST. The existing centrate pumps will be relocated to allow for placement of the new centrate pumps that accommodate a new flow route. These pumps will transfer centrate to the new CST, where it will be metered back to the headworks through the IPS (Section 6.1) and ultimately discharged into the same effluent grit channel as noted in the first option above. Consequently, the ultimate feed point of the centrate does not change with this project, but simply the route it

takes to that location. The preliminary equipment and piping reconfiguration for this second option are shown in Figure 6-5. The P&ID for this system is provided on Drawing P-700 in Appendix F. In addition, the CST piping and instrumentation is on Drawing P-701.

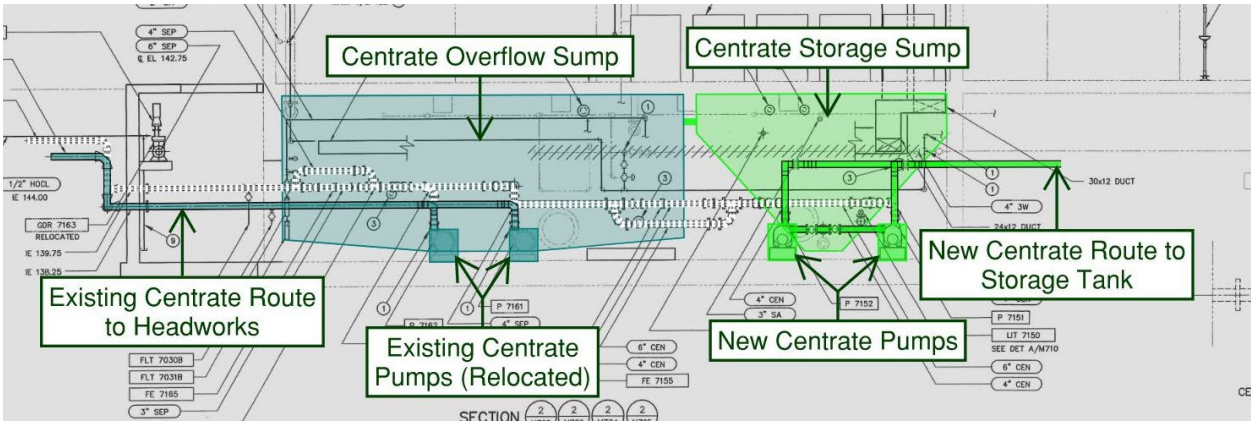

Figure 6-5. Equipment and piping reconfiguration for centrate storage and discharge

6.2.1 Centrate Pump Design

Preliminary pump design criteria for the new centrate pumps were based on an AFT Fathom model using anticipated pipe lengths and fittings and flows from the centrifuges. Because the centrifuges are fed by 250 gpm sludge transfer pumps, the most conservative flow estimation would match the maximum speed of the pump. Therefore, the maximum flow for these pumps would be 250 gpm. The remaining design criteria were determined by assessing the hydraulic model and receiving vendor sizing, shown in Table 6-3. For comparison, the existing centrate pumps (P-7151 and P-7152) are rated for 220 gpm with a 38.7-ft TDH with a 7.5 hp motor. This increase in size is consistent with the new routing associated with the CST.

Table 6-3. Centrate storage pump preliminary design criteria

Design criterion	Value	Unit	Notes
Pump type	End-suction centrifugal	-	-
Design flow	250	gpm	Based on centrifuge feed rate
Design TDH	35	psi	Based on preliminary site piping
Approximate motor size	15	hp	Based on vendor feedback

6.3 Odor Control

Three distinct areas have been identified as requiring odor control as part of this project, including the existing gravity thickening tank that will be repurposed as a CST, the new solids-thickening equipment, and the new septage- and FOG-handling stations and equipment. The selected technology for treatment at each of these locations is an in-ground inorganic biofilter (the basis for this technology selection is outlined in Appendix C). County staff are familiar with odor control and biofilter technology, including the operation of two organic biofilters currently on site.

6.3.1 Site Conditions

CKTP is in a moderately remote location off Brownsville Highway NE, with few neighbors within proximity. A common setback distance of 500 feet from the CKTP boundary is shown in Figure 6-6 below. The east property (formerly Jopp Energy) has been purchased by the County. Aside from two residences (12530 Brownsville Highway NE and 12108 Brownsville Highway NE) that appear to be within 500 feet CKTP, the land within 500 feet of CKTP is primarily forested or open grassy areas. The topography of the area is hilly shoreline typical of Puget Sound. Beyond the 500-foot zone are numerous homes with acreage and neighborhoods. The overall risk for odors traveling off site and receiving complaints from neighbors is currently low and shall remain low after completion of this project.

Figure 6-6. Off-site receptor boundary for CKTP

Source: Google Maps 2023.

Figure 6-7 shows the wind patterns of the nearest Ecology air monitoring station, which is located approximately 5.5 miles south of CKTP and identified as the Bremerton-Spruce Avenue station. The data, which are based on the previous 5 years of monitoring, show that the strongest and most frequent winds blow in the southerly direction and the second-most frequent wind pattern blowing northerly with a milder wind speed. This is a positive based on the surrounding areas as there are fewer receptors at greater distances to the north and south of CKTP.

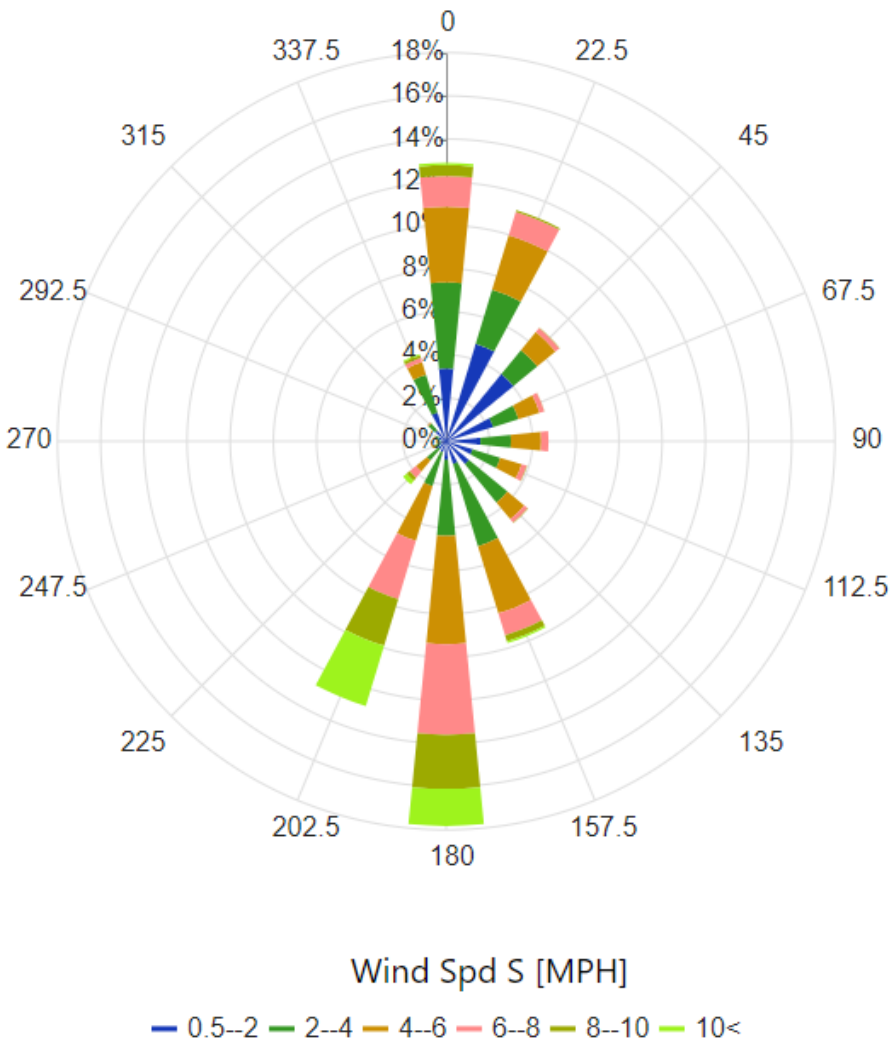

Figure 6-7. Bremerton-Spruce wind patterns

Source: Ecology 2023b.

6.3.2 Regulations

The Puget Sound Clean Air Agency (PSCAA) will oversee odor control design for CKTP. Each process system will require a Notice of Construction (NOC) and a permit through PSCAA prior to being placed in operation. The permit may require dispersion modeling, and at a minimum loading calculations to determine exhaust rates and constituent mass. It is recommended to submit this permitting well in advance (at least 1 year) of construction of the system, as the lead time for PSCAA has been problematic on recent projects.

6.3.3 Design Criteria

No site-specific odor control sampling has been completed to date to identify odor constituents for each of the areas. However, based on extensive experience with odor control in the Northwest, Table 6-4 summarizes preliminary design concentrations that

will be used for each area. As described previously, CKTP is at low risk of odor control complaints because of the proactive existing odor control, large buffer zone with neighbors, and typical wind patterns.

Ventilation rates are typically determined by the following criteria:

- Worker safety and comfort
- NFPA 820, *Standard for Fire Protection in Wastewater Treatment and Collection Facilities*
- American Conference of Governmental Industrial Hygienists *Industrial Ventilation Manual*
- Ventilation rates required to effectively capture odorous air emissions from industrial guidance manuals and field experience
- Ventilation rates required to prevent buildup of highly corrosive conditions that will result in unwanted degradation of equipment and infrastructure

Development of the foul-air volumes for final design will be based on the following assumptions/criteria:

- Ventilation systems shall be designed to pull air from odorous spaces from the odor generation source. Foul air will not be pulled across clean air areas. Ventilation systems will be designed to pull air from the focused sources of odor to minimize flows and focus critical areas under negative pressure.
- Foul air will be collected at the odor sources using low-level covers and other isolation measures to limit the amount of air to be handled. Covers will be provided at the new grit facilities to the extent possible.
- For areas susceptible to grease aerosols, cleanable/washable filters will be provided.
- The new CSTs will be enclosed and the tank will be covered. Foul-air ventilation currently provided for the existing GT will be replaced by a new inorganic media filter. Additionally, foul air will be pulled from the IPS and treated at this location. See Appendix F Sheet P-790 for P&IDs showing this system.
- The PS and septage thickening odor control system will pull foul air from both the covers of the flocculation tank and RDT for each of the three new thickening systems. See Appendix F Sheet P-563 for the P&ID showing this system.
- The septage/FOG odor control system will pull from the covers of the new tanks and equipment. See Appendix F Sheet P-590 for P&IDs showing specific equipment and general locations.
- The remaining odor source airflows will be sufficient to maintain the space below the covers in a negative static condition.
- A push-pull (or pull-push) ventilation system will be used (as needed but not anticipated) in which the odor source areas are exhausted by local fans that discharge to the foul-air collection system. Foul air will then be forced through the treatment system by large, centralized blowers. The push-pull arrangement ensures

positive ventilation for source areas, and provides greater reliability in the event of a system fan outage or potential future facility modifications.

- Duct design will be fiberglass-reinforced plastic (FRP) duct for all above-grade applications. These applications will include surfacing veil with ultraviolet (UV)-resistant coating, without insulation.
- Duct design will be FRP or plastic HDPE for all below-grade applications. Smooth diameter, dimension ratio (DR) 7 under roadways and DR 11 minimum will be used for all biofilter applications and corrugated will be considered for larger diameters. Both FRP and HDPE applications will be designed to meet all applicable codes, standards, and manufacturer's recommendations.

Table 6-4 provides other general design criteria for estimating foul-air collection/ventilation rates. If the major odor and corrosion sources are effectively contained and ventilated, the foul-air quantities listed in Table 6-5 summarize the preliminary loading for each application.

Table 6-4. Foul-air collection/ventilation design criteria

Area/source	Rate
Occupied areas, such as rooms with open conveyors or truck loading bays for loading screenings and grit	6–12 air changes per hour (ACH)
Covered basins not occupied	2–4 ACH, depending upon openings needed
Sweep velocities along channels being ventilated	50 feet per minute (fpm) minimum
Capture face velocities at makeup air openings or at access hatches (including cracks)	100 to 200 fpm
Tightly closed conveyance or materials handling systems (e.g., overflow covers)	10 to 40 cfm minimum per unit
Air from process air source such as aerated tanks or channel	10% higher than inlet air volume and supply air
Areas requiring reduction of adjacent area classifications per NFPA 820	12 ACH minimum

Table 6-5 presents estimated air volumes for the three systems based upon the above design criteria and below assumptions:

- Point source control of odors used at covered facilities and enclosed equipment to the greatest extent possible to minimize air collection volumes
- Placing all covered areas in a slight negative static condition to ensure that foul air is not allowed to escape to atmosphere, and regular maintenance openings ventilated with a minimum face velocity during open conditions

No occupied spaces are planned for odor control. Providing minimum room air exchanges to meet requirements of NFPA 820 and the National Electrical Code (NEC) will be coordinated with the room ventilation design (see Section 7) to provide an overall air exchange rate as required per code. The point source odor control will be balanced with the room are for the FOG building and the PS and septage thickening building.

Table 6-5. Odor control: preliminary design concentrations

Odor control system	H_2S concentration (ppmv)	NH_3 concentration (ppmv)	Odorous air (cfm)	Connection points (#)	Notes
CSTs	2 avg.; 5 peak	20 avg.; 40 peak	2,000	2	Unoccupied, point source
Solids-thickening equipment	10 avg.; 30 peak	1 avg.; 3 peak	1,500	6	Point source (pull from connections at each RDT)
Septage- and FOG-handling equipment	10 avg.; 30 peak	1 avg.; 3 peak	1,900	14	Point source (pull from screening equipment, over dumpsters, from vaults and from tanks)

Each of the areas noted in Table 6-5 will have a dedicated biofilter system with the intent of reducing the amount of ductwork required. Each system will consist of the following components:

- Duty/standby fans
- Ductwork and appurtenances
- Inorganic biofilter with lateral/diffuser system, biofilter media, pre-wetting system, surface irrigation and bed drainage system

The biofilters will be designed based on the standards outlined in Table 6-6.

Biofilter Media

Biofilters consist of various types of solid media that provide a surface for microorganisms to live on. A foul-air distribution system is installed and the biofilter media is typically placed on top for an upflow system, similar to what is proposed for this project. The microorganisms can remove a wide range of compounds including H_2S, methyl mercaptan, and other reduced-sulfur compounds typical of wastewater applications. Continuous operation is important for these systems as the odorous compounds in the air are the food keeping the microorganisms alive; depriving them of food for extended periods will kill them off and require a longer seeding and startup time to get the biofilter back online and functioning as designed. Two types of media are being considered for this project: a typical inorganic media that will be supplied by Biorem, Environmental Composite Systems (ECS), Daniel Mechanical, and others will be considered. See Figure 6-8 for an example of this type of media.

Figure 6-8. Inorganic biofilter media, Biorem Biosorbens

The second type of media, which is also inorganic, is supplied by Bohn, which uses sands, soils, topsoils, and amendments as the media. Bohn is being recommended as it can provide higher levels of treatment for ammonia, which is expected at the CST. A benefit to this type of filter is that it can be placed at grade and topped with rock/gravel, grass, or other decorative surfaces that may be more aesthetically pleasing. Figure 6-9 shows an installation in Wenatchee, Washington, where a Bohn media odor control system was installed.

Figure 6-9. Bohn media biofilter, Wenatchee, Washington

Typical maintenance for biofilters includes cleaning, maintaining, and winterizing (as applicable) the pre-wetting and surface irrigation systems; weeding the biofilter media; and hydrojetting of the foul-air distribution system within the biofilter bed on a 5- to 10-year interval as distribution orifices can become plugged overtime. Fan maintenance includes greasing bearings and conducting visual inspections. Grease filter cleaning with water and solvent mixture is required, with the frequency dependent on service type but expected to be every 6 months initially. Both media types are under warranty for 10

years, with both types having numerous installations that have lasted upwards of 20 years.

Table 6-6. Typical biofilter bed sizing criteria

Process parameter	Unit	Recommended range	Design
Empty-bed residence time	min	0.5–1.5	>0.9
Bed surface loading	cfm/ft^2	2.5–4.5	<4.5
Bed media depth	ft	3.0–5.0	4.0
H_2S removal efficiency	%	99% removal with max input of 50 ppmv	
Ammonia removal efficiency[a]	%	90% removal with max input of 100 ppmv	

a. Applicable for Bohn biofilter media only.

Biofilter Bed Containment

There are a few options to contain the biofilter media and lateral diffuser piping including above-grade steel tanks, partially buried concrete containment walls with a membrane liner system, and earthen basin with a membrane liner system. Each system requires slightly different footprint space for construction with steel tanks requiring the smallest and earthen basin the largest. The structures will hold the foul-air distribution system piping, biofilter drain system, surface irrigation system, and various fill/medias as shown in Figure 6-10. An example section of the earthen basin containment wall is shown in Figure 6-11.

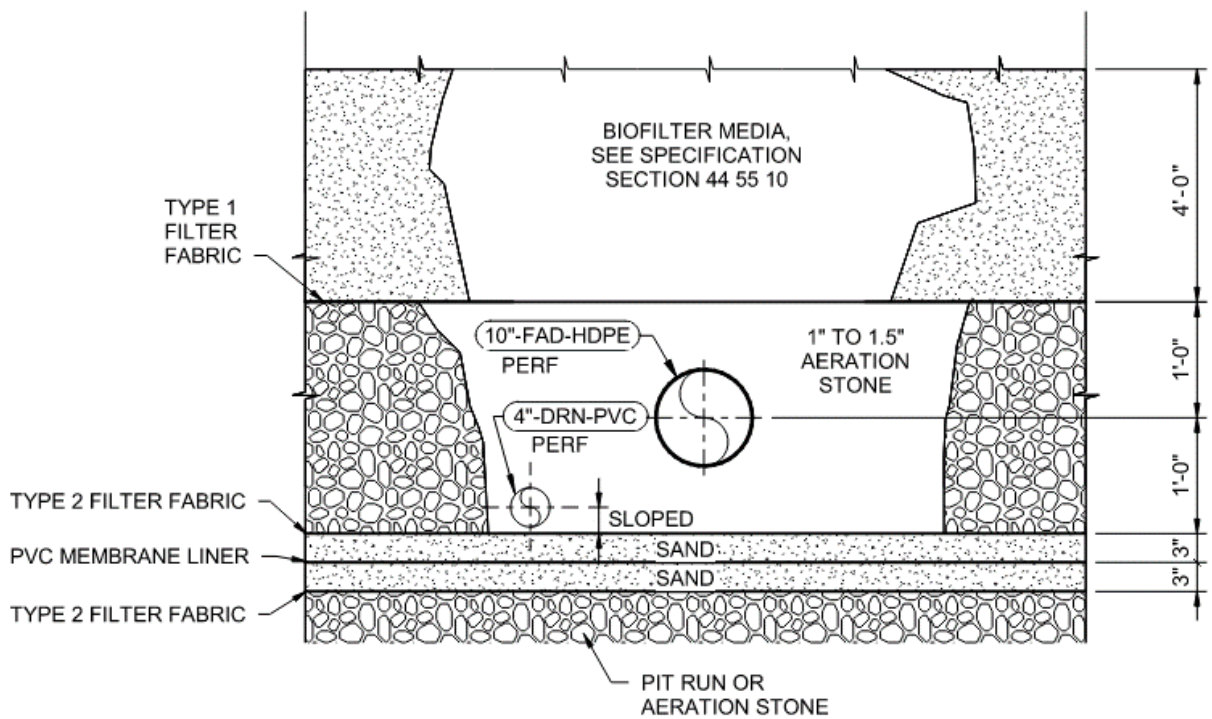

Figure 6-10. Biofilter media and piping section

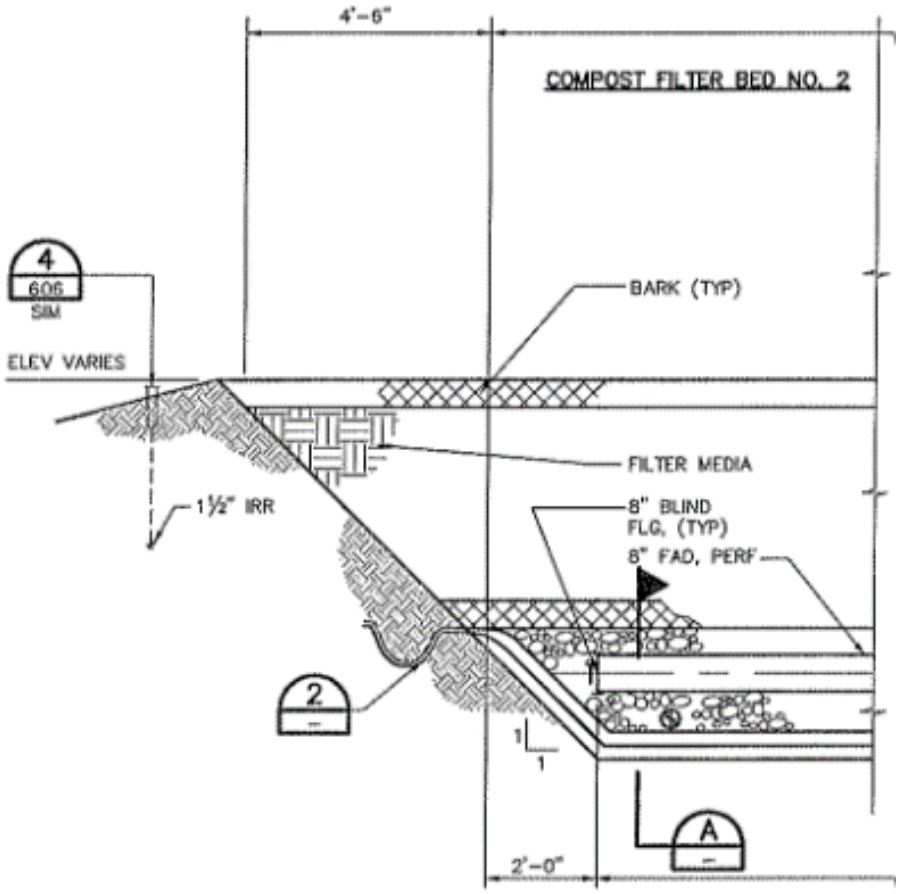

Figure 6-11. Biofilter: earthen basin with membrane liner

The partially buried concrete wall with membrane liner will be the BOD, as this provides a simple, robust system that can be easily cleaned for media replacement and provides simple construction with extended life. Figure 6-12 shows an example of the concrete wall with membrane liner.

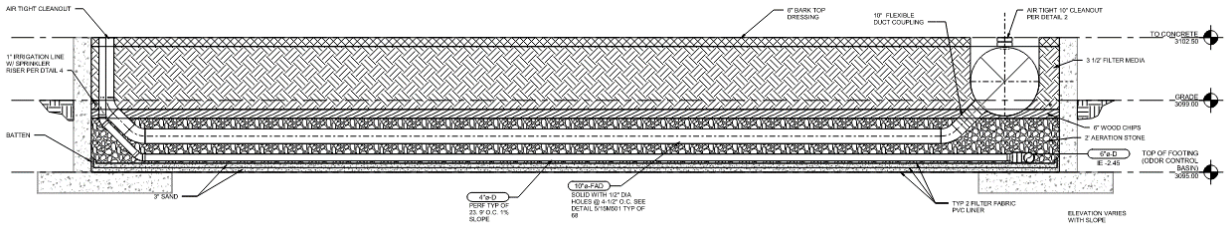

Figure 6-12. Biofilter: concrete wall with membrane liner

Odor Control Blowers

The odor control blowers will be factory-assembled and tested units consisting of a housing, a wheel, a fan shaft, bearings, and a side support structure. Design criteria and key specifications for the odor control blowers are provided in Table 6-7.

Table 6-7. Preliminary odor control blower design criteria and specifications

Description	Unit	Centrate tank fans	Solids-thickening fans	FOG/septage-receiving fans
Type of biofilter bed media	Type	Inorganic filter bed (Bohn)	Inorganic filter bed	Inorganic filter bed
Location	—	Outside, exposed		
Number of blowers	No.	2 (1 duty + 1 standby)	2 (1 duty + 1 standby)	2 (1 duty + 1 standby)
Type of odor control blower	Type	Centrifugal, radial fume exhauster		
Configuration	Type	Horizontal		
Sound enclosure	-	No		
Impeller material	Type	Fiberglass-reinforced plastic		
Temperature range	ºF	30°F–90°F		
Drive type	Type	VFD; V-belt drive with belt guard		
Design airflow rate	scfm	2,000	1,500	1,900
Design static pressure	in.	12	10	10
Maximum speed	rpm	2,200	3,800	2,000
Operating	hp	7.45	4.8	5.8
Motor horsepower	hp	15	7.5	10
Operating temperature	ºF	50		
Motor type	Type	460 V, 3 Ph, 60 Hz		
Static efficiency	%	48.9	46.7	49.5
Motor efficiency	—	Premium		
Motor rating	—	TEFC		
Blower body material	Type	Fiberglass-reinforced plastic		
Flange suction, size	in.	20	12	20
Flange discharge, size	in.	20	12	20
Base	—	Self-contained motor platform		
Exterior metal assembly coating	—	Coated with high solids vinyl coating 4 to 5 mils thickness		
Inlet and drive side plates	—	Fastened to housing with imbedded, FRP-encapsulated Type 316 stainless-steel bolts		
Outlet flange and Inlet collar	—	Solid FRP		
Enclosure	—	FX – TEFC, explosion proof, Class I, Group D, Class II Groups F and D		

Odor control blowers are readily available from multiple manufacturers, including Aerovent, Hartzell, and New York Blowers. Figure 6-13 and Figure 6-14 provide two examples of typical fan arrangements. All fans will include VFDs for ease of balancing and operation.

Figure 6-13. Hartzell FRP radial blower

Figure 6-14. New York Blowers FRP radial flume exhauster

Foul-Air Duct

All exposed foul-air duct piping will be constructed out of FRP for corrosion resistance. All buried foul-air duct piping will be HDPE with DR 7 rating below roadways and DR 11 within the biofilter. All exposed piping will be coated with a UV-protective coating and no

insulation will be provided on the duct. The foul-air duct sizes are expected to be between 4-inch diameter for some of the small equipment connections and up to 20-inch diameter at the largest segments. Preliminary duct sizing is based on keeping each segment friction loss to less than 0.1 inch of water per 100 feet of duct length. This minimizes overall pressure loss and noise in the system. The P&IDs in Appendix F show expected duct sizes and components; see Sheets P-563, P-590, and P-790 for the biofilters and connections to other sheets for the duct collection system. Components of the odor control system are described in detail in the following sections. Figure 6-15 shows an example of the type of foul-air duct described and a transition between buried HDPE and exposed FRP duct.

Figure 6-15. Foul-air duct (FRP and HDPE)

Atomizing Nozzle

Pre-wetting of the foul-airflow and surface irrigation will be provided for each biofilter to maintain moist conditions in the filter bed that are conducive to sustaining biological growth. Moisture can be added through either a pre-wetting system that injects moisture into the inlet foul air (which then filters through the media from below) or a surface irrigation system that sprinklers the top of the media bed directly (soaking down through to the bottom). A pre-wetting system (as shown in Figure 6-16) consisting of atomization nozzles installed within the foul-air drop legs immediately upstream from the biofilter is recommended. The pre-wetting systems would be located on each biofilter bed supply duct to enable pre-wetting to be controlled to each bed. The pre-wetting system spray nozzle specifications are provided in Table 6-8.

Table 6-8 Pre-wetting system spray nozzle specifications

Description	Unit	Value
Spray nozzle size	in.	¼
Design condition	gpm	3.33
Design pressure	psi	40
Maximum temperature	ºF	180
Screen size	Type	80 mesh, manel screen
Material	Type	416 stainless steel
Spray pattern	Type	Full-cone
Spray direction	—	Straight
Spray angle	Degrees	80

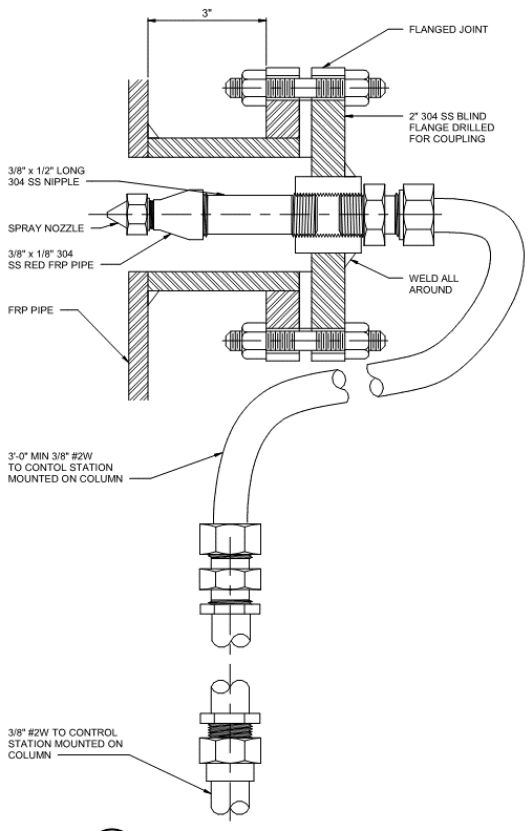

Figure 6-16. Typical spray nozzles (injecting into inlet ductwork for biofilter)

McMaster Carr Supply and Grainger (EXAIR) atomization nozzles for pre-wetting are shown on Figure 6-17 and Figure 6-18, respectively.

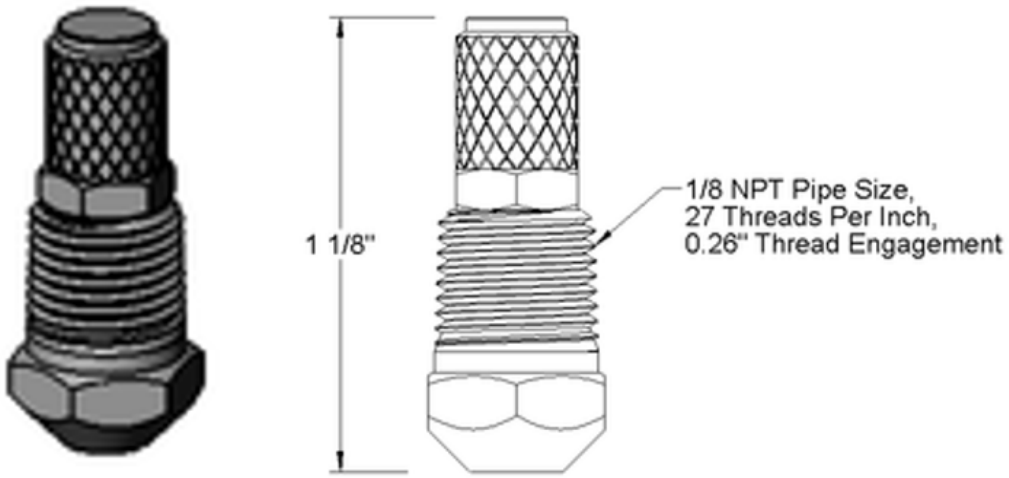

Figure 6-17. McMaster Carr Supply Co., atomizing spray nozzle

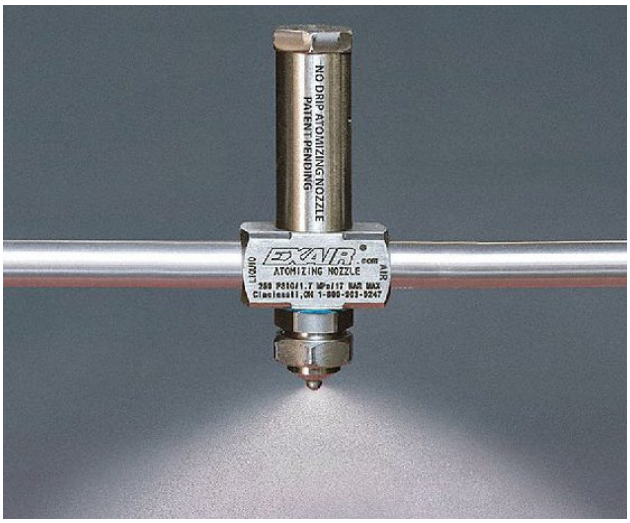

Figure 6-18. Grainger (EXAIR) atomizing spray nozzles

Surface Irrigation

An irrigation system controller will be required to control both pre-wetting humidification and biofilter bed surface irrigation. The surface irrigation system will consist of HDPE piping, timer/controller, solenoid valves, isolation valves, flow indicators, sprinkler heads, and pressure-reducing valves and strainers as required. Rain Bird or equal equipment will be used (see Figure 6-19). The system shall be capable of controlling a minimum of four zones and handling non-potable water. See Sheets P-563, P-590, and P-790 in Appendix F for diagrams of this system. Each biofilter will have three branch lines, one for the pre-wetting system, two zones for surface irrigation, and the fourth zone of the controller will not be used. The sprinkler control system and associated control valves and piping will be installed above grade on a weather-resistant board for easy access and maintenance.

Figure 6-19. Rain Bird sprinkler control system and surface irrigation nozzle

Source: Rain Bird 2023.

Damper

Dampers will be installed at each foul-air supply leg for blower and biofilter bed cell isolation, including backdraft dampers, and air balancing between the beds. The damper specifications and design standards are summarized in Table 6-9.

Table 6-9. Damper specifications

Description	Unit	Value	
Damper type	—	Isolation (control)	Balancing
Leakage rate	cfm/ft^2	0.00 at 10 in. w.g.	—
Material	Type	FRP	FRP
Body construction	Type	Molded fiberglass, vinyl ester resin	Fiberglass, vinyl ester resin
Blade construction	Type	Fiberglass/vinyl ester with blade seals	Fiberglass/vinyl ester resin
O-ring material	Type	Viton	None
Body configuration	Type	Unitary blade to body construction with no circumferential seal	Fiberglass channel
Shaft material	Type	316 stainless steel (FRP encapsulated)	Pultruded fiberglass
Liner thickness	mil	20 (100 on blades)	20
Operators	Type	Handwheel, locking	Hand quadrant lever, fixed

Spunstrand, Ruskin, and Daniel Mechanical are accepted damper manufacturers. Dampers from each manufacturer are shown in Figure 6-20, Figure 6-21, and Figure 6-22, respectively. The two main types of dampers in this project will be butterfly for isolation and balancing of the system and backdraft, which will function similar to a check valve on the discharge of the duty/standby fans.

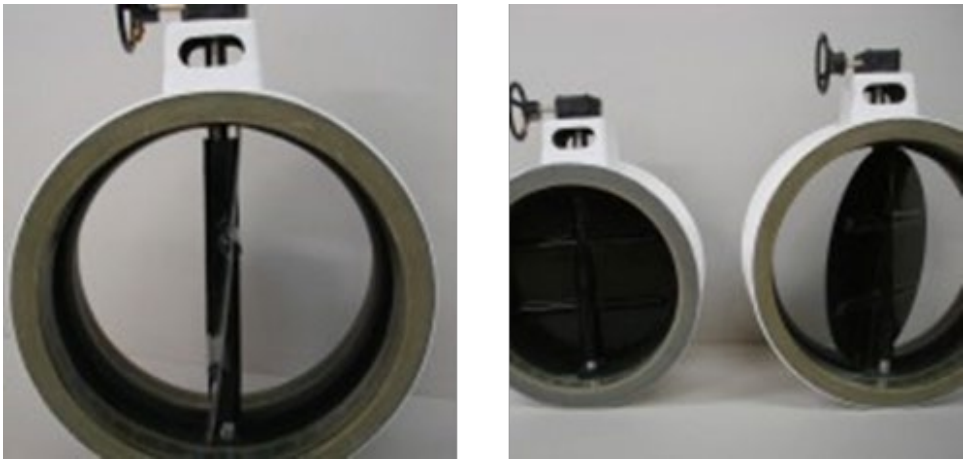

Figure 6-20. Spunstrand dampers

Figure 6-21. Ruskin dampers

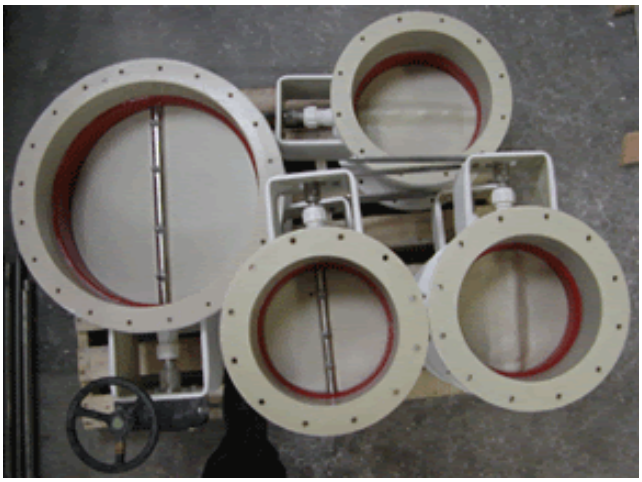

Figure 6-22. Daniel mechanical dampers

Grease Filter

A combination grease filter/inlet box will be provided to collect and remove grease and particulates from the foul airflow. Providing a filter helps reduce wear and the

accumulation of grease on the blower components. The specification and selection of grease filters will be coordinated with odor control blower manufacturers so that the grease filter/inlet box does not impede the performance of the fan. Spunstrand and Ruskin are accepted grease filter manufacturers. The body of each filter will be FRP matching the ductwork, with easily accessible quick-bolt housing doors for access to the internal filter for removal. Each unit will include drains and differential pressure gauges for monitoring. An image of a similar grease filter is shown in Figure 6-23. The grease filter specifications and general design criteria are provided in Table 6-10.

Figure 6-23. Grease filter with differential pressure gauge

Table 6-10. Grease filter specifications

Description	Unit	Value
Material	-	FRP, Class 1 flame rating
FRP resin type	Type	Hetron 992SB vinylester
Hardware	-	Stainless steel
Grease filter material	-	Aluminum, washable
Grease filter differential pressure	in./w.g.	0.09 at 500 fpm
Diameter	in.	Varies
Minimum wall thickness	in.	0.187 (12–24)
		0.260 (26–48)
		0.375 (54–72)
Maximum temperature	ºF	180
Differential pressure gauge	-	Magnehelic, Ametek/USGauge, or Ashcroft
Differential pressure gauge range	in./w.g.	0–5

6.4 Existing Pumps Evaluation

The following pumps (existing pumps that are not currently in the scope of the upgrades) were evaluated to confirm that the changes to the site layout (pumping distances) and operational adjustments for the proposed upgrades would not affect the ability of each pump to continue to operate as designed. Such facility changes include the new PS and septage thickening building, the addition of Digesters 3 and 4, WAS-thickening redundancy, centrate storage, and new thickening equipment. Table 6-11 shows a summary of the applicable pumps that were modeled for due diligence.

Table 6-11. Summary of existing pump evaluation

Pump	Type	Rated TDH	Modeled TDH	Needs replacement?
PS pumps (P-1001, P-1002)	Double disc	200 gpm at 30 ft	3.0 ft	No
Scum pumps (P-1003, P-1004)	PD plunger	140 gpm at 70 ft	50.9 ft	No
WAS pumps (P-2201, P-2202)	PD rotary lobe	350 gpm at 46 ft	18.0 ft	No
Centrate sump pumps (P-7151, P-7152)	Centrifugal	220 gpm at 39 ft	21.6 ft	No
TWAS to digester feed pumps (P-4510, P-4520, P-4530)	Progressive cavity	30 gpm at 231 ft	29.7 ft	No

6.4.1 Primary Sludge Pumps (P-1001, P-1002)

PS pumps P-1001 and P-1002 are installed in the Aeration Basins 1 and 2 utilidor. They are double-disc pumps rated for 200 gpm with a 30-foot TDH and 10 hp motor. They were installed during the 2009 upgrade project to pump PS from the clarifiers to the GT splitter box, replacing the 10.0 hp torque-flow pumps that were installed previously.

New pipe routing on the discharge of these pumps is needed so that they feed into the new PS and septage thickening building. The existing lines will need replacement, but the new line will also be 6 inches and follow the same path to the east until it reaches the northwest corner of the existing SPB. At this point, it will be routed south, then west, then north, replacing and following existing PS or scum lines. Finally, it will head west to enter the new PS and septage thickening building.

The TDH assessed for this routing was found to be roughly 3.0 feet. The existing pumps are rated to accommodate a 30-foot TDH, so based on capacity, these pumps do not require replacement at this time. This extremely low TDH required comparative to the rated TDH is due to the lower elevation at the new PS and septage thickening building, compared to the existing outlet at the gravity thickening splitter box structure.

6.4.2 Scum/FOG Pumps (P-1003, P-1004)

Scum/FOG pumps P-1003 and P-1004 are installed in the Aeration Basins 1 and 2 utilidor. They are duplex plunger pumps that were installed during the original construction of CKTP in 1978. The pumps are considered by plant staff to be in good condition and will continue to be used for the foreseeable future (as needed). They are rated for 140 gpm with a TDH of 70 feet and 7.5 hp motor. Before the new PS pumps (P-1001, P-1002) were installed, P-1004 was used as the PS pump. In 1996, it was converted for use as a scum/FOG pump to provide redundancy with P-1003.

These pumps will see adjustments to both flow and pipe layouts. Flow will be minimized because of the relocation of FOG handling. Therefore, these pumps will not need to accommodate as much flow relative to their current operations. In addition, the existing scum line to the Digesters 1 and 2 process building will be intercepted to provide additional routing to the Digesters 3 and 4 process building.

The total assessed TDH for these two routes at their worst-case condition, which is seen with both pumps on, was found to be 49.8 feet to Digesters 1 and 2, and 50.9 feet to Digesters 3 and 4. These pumps are rated for a TDH of 70 feet, so based on capacity, they do not require replacement at this time. It should also be noted that scum production is currently very limited (as discussed in Section 5). With FOG pumping becoming part of the new FOG facility, and no longer part of the scum system, these scum pumps are expected to operate very infrequently if minor scum pumping is needed.

6.4.3 WAS Pumps (P-2201, P-2202)

WAS pumps P-2201 and P-2202 are located near Aeration Basins 3 and 4. They are rotary-lobe pumps with a 25 hp motor that were installed in 2015 as part of the Resource Recovery project. They are rated for 350 gpm at 20 psi. AFT Fathom modeling assessed their current pump route to the existing WAS-thickening building, as well as to the proposed PS and septage thickening building for redundant WAS-thickening capabilities.

New routing of the WAS line includes tying into the existing line just south of the WAS-thickening building and running it south, eventually turning and entering the PS and septage thickening building from the east.

The total assessed TDH for these two routes at 350 gpm was found to be 13.9 psi and 7.8 psi, respectively. This difference is due to the elevation of the PS and septage

thickening building being 15 feet lower than the existing WAS-thickening building, so a lower TDH is required. In other words, the required TDH to the existing WAS-thickening building was evaluated and found to be 32.1 feet; however, the required TDH to the new PS and septage thickening building was evaluated at 18.0 feet. These pumps are rated for a TDH of 46 feet, so replacement of these pumps is not necessary.

6.4.4 Centrate Sump Pumps (Existing P-7151, P-7152)

Centrate sump pumps P-7151 and P-7152 are installed in the basement of the SPB and pull directly from the existing centrate sump. The existing discharge has the option to go to the headworks building or the primary clarifier influent. These Gorman-Rupp centrifugal pumps were installed in 1999, are rated for a TDH of 38.7 feet, and have a 7.5 hp motor.

The adjustments to these pumps include relocating to pull from the existing septage sump, which neighbors the centrate sump. The existing septage sump will be used as an overflow to the centrate sump, and these existing pumps will pump along the same route to the headworks, while pulling from the existing septage sump. These updates can be seen in Figure 6-5 above.

The TDH with these adjustments at 220 gpm is anticipated to be roughly 21.3 feet, or about 9.2 pounds per square inch differential (psid), with an assumed 70 percent efficiency. These pumps are rated for a TDH of 38.7 feet. Therefore, they are able to accommodate the recommended adjustments to the system and do not need replacement at this time.

6.4.5 TSBT Feed Pumps to Digester (P-4510, P-4520, P-4530)

TSBT feed pumps P-4510, P-4520, and P-4530 are currently installed in the southeast corner of the WAS-thickening building. They are all positive-displacement progressive-cavity pumps rated for 30 gpm at 100 psi. They were installed in 2015 during the Resource Recovery project to pump thickened sludge from the TSBT to the digesters.

For the future system, these pumps must accommodate a tie-in and additional pipe length to supply TWAS to Digesters 3 and 4. Proposed routing includes using the existing 6-inch-diameter line to Digester 1 and rerouting to supply TWAS to the new digesters. This tie-in is proposed to be added southeast of the TSBT and go south, eventually turning and entering the west side of the Digesters 3 and 4 process building. Flows to Digester 1 will be reconfigured inside the Digesters 1 and 2 process building to pull from the existing line that feeds Digester 2.

The TDH with these adjustments at 30 gpm was evaluated to be 29.7 feet using the Bingham Plastic model for viscosity of the TWAS. These pumps are rated for a TDH of 231 feet, so replacement of these pumps is not necessary at this time.

7 HVAC and Boiler Systems

The following sections outline the heating, ventilation, and air conditioning (HVAC) aspects of the design as well as the NG boiler system and hot water systems that will serve process and building heating needs.

7.1 General Design Standards and Criteria

The building mechanical systems will be sized using the American Society for Heating, Refrigerating and Air-Conditioning Engineers (ASHRAE) design criteria for Bremerton, Washington, which is the weather station with the most similar conditions to CKTP (Table 7-1). The heating design temperature used is the 20-year minimum temperature to reduce the potential for any freezing conditions in 100 percent outside air buildings.

Table 7-1. Outdoor design temperatures

Season	Dry bulb temperature (°F)	Wet bulb temperature (°F)	Notes
Heating	7	-	ASHRAE 20-year minimum
Cooling	86.4	65.6	ASHRAE 0.4% cooing design

The inside room temperatures will be as follows (Table 7-2).

Table 7-2. Indoor design temperatures

Space	Heating temperature (°F)	Cooling temperature (°F)
Electrical Rooms	60	80
Process Rooms	50	-

NFPA 820-2024 provides guidance for potentially hazardous locations within CKTP and has mitigation measures to reduce these hazards, which will be followed. See Table 7-3 for the identified spaces, classifications, and requirements for air changes per hour (ACH).

Ventilation rates will be based on the worst case of NFPA 820 airflows required to reduce space classification, International Building Code (IBC)/International Fire Code (IFC) hazardous-area ventilation rates where applicable, or International Mechanical Code (IMC) ventilation rates.

Table 7-3. NFPA 820 room classification and ventilation requirements

Room	Building	NFPA 820	Classification	ACH	Pressure
Digester pump building	Digesters 1 and 2 Complex	Table 6.2.2(a), row 9b and row 17d	Unclassified	6	Positive
Digester pump building	Digesters 3 and 4 Complex	Table 6.2.2(a), row 9b and row 17d	Unclassified	6	Positive
Boiler room	Digester control building	-	-	-	-
Electrical room	Digester control building	-	-	-	-

Room	Building	NFPA 820	Classification	ACH	Pressure
FOG receiving	FOG building	Table 9.1.1.1.1, row 1	Class I, Division 2	12	Negative
FOG mechanical	FOG building	-	Unclassified[a]	-	Positive
Electrical rooms	FOG building	-	Unclassified[a]	-	Positive
RDT room	Thickening building	Table 6.2.2(a), row 8	Class I, Division 2	12	Negative
Polymer room	Thickening building	-	Unclassified[a]	-	Positive
Electrical room	Thickening building	-	Unclassified[a]	-	Positive

a. Room is not classified per NFPA 820 but must be kept positive because of adjacent classified space.

All HVAC equipment will be constructed of corrosion-resistant materials such as aluminum, stainless steel, or FRP or will be provided with a corrosion-resistant air-dry phenolic coating. HVAC ductwork will be aluminum or stainless steel.

7.2 Boilers and Hot Water Loop

Hot water is required to serve the digesters and to feed the existing SPB. The current hot water needs are met by two Cleaver-Brooks boilers installed in 1978 and refurbished in 2013. These boilers are located in the existing digester control building, which is an unsafe location for this type of equipment and they need to be removed. Because of their age and minimal turndown capacity, the boilers will be replaced with new boilers in the new digester control building. With this change, the existing hot water loop will be evaluated and updated to remove obsolete and unnecessary loads from the system.

The new loads include the digester HEXs and the existing SPB HVAC system. The administration/laboratory building will be removed from the heat loop, under a different contract, and the yard piping will be replaced during construction of this project. For sizing the new boilers, the digesters have a maximum load of 1,990 thousand British thermal units per hour (MBH) and a minimum load of 196 MBH. The existing SPB has two Trane air handlers, manufactured in 2000, that receive heating water from the boilers. These units are beyond their ASHRAE life expectancy but appear to be in fair external condition and no issues were reported during the site visit. For planning purposes, the new boilers will include 800 MBH of heating for the existing air handlers.

The total boiler load varies from 196 MBH to 2,828 MBH. To meet all load conditions, three operating boilers at 1,000 MBH output and a 5:1 turndown will be provided. A single redundant boiler will also be provided. This will provide capacity from 200 MBH to 3,000 MBH, exceeding the required capacity.

The boilers will be NG-fired (with the design assumption that NG service will be established to CKTP prior to, or as part of, this project) and will not have a backup fuel source allowing the use of readily available commercial/industrial boilers with no special requirements for burning digester gas to be used. With this type of boiler, several control and pumping options will be explored during the 60 percent design phase to optimize the flexibility and operation of both the digester HEXs and the HVAC equipment on the heating water loop.

The boilers will be provided with a boiler control panel that integrates with the CKTP supervisory control and data acquisition (SCADA) system to provide feedback and control to the operators.

7.3 Existing Digester Complex HVAC

The existing digester control building does not meet current NFPA 820 standards for air volume and physical separation between classified areas and should be considered a Class I, Division 2 area. There is no clear method to mitigate the issues found and this building will be replaced with a new digester pump building that complies with the current building codes and with NFPA 820-2024.

7.4 New Digester Complex HVAC

Both of the new digester complexes will be physically separated from the digesters to meet the NFPA 820 physical separation requirements for digester control buildings. Six air changes per hour (ACH) of ventilation will be provided from a roof- or grade-mounted, direct-fired NG air handler to reduce the building classification from Class I, Division 2 to Unclassified. The air handler will provide air to both levels of the building and the stairwell with an airflow of 7,200 cfm for each building. A roof-mounted exhaust fan will exhaust each building and will be balanced to maintain the building at a positive 0.1 inch water column (w.c.) in compliance with paragraph 9.2.5 of NFPA 820. All HVAC equipment and intakes will be located at least 10 feet from the digesters to avoid any classified areas.

Controls for the air handler will be standalone. Airflow switches in the supply and exhaust ducts will be provided by instrumentation and controls (I&C) for monitoring and for go/no-go alarms in the space, at entrances, and in the control room.

7.5 Digester Control Building HVAC

The digester control building houses the digester heating water boilers and the electrical service for the digester complexes. It does not require specific ventilation rates per NFPA 820 but will require combustion air for the boilers. The boiler room HVAC system will consist of hydronic unit heaters and a roof-mounted exhaust fan with passive air intakes for ventilation.

The electrical room will be provided with a positive pressurization unit to mitigate corrosion effects and will have ductless split-system heat pumps for heating and cooling.

7.6 Thickening Building HVAC

The thickening building will have three separate HVAC systems, one serving each space. The thickener room requires 12 ACH to reduce the classification to Class I, Division 2. This space will be served by a direct-fired NG makeup air handler and a roof-mounted exhaust fan. The airflow rate for this room will be 11,500 cfm and heating capacity will be 550 MBH to maintain room temperature on a design day. The exhaust rate will be higher than the supply airflow rate so that the room is negatively pressurized

in accordance with NFPA 820. The controls will be standalone but this system will have flow detection for monitoring and alarm through the SCADA system.

The polymer room will be served by a separate direct-fired NG makeup air handler and roof exhaust fan. Because this room is unclassified and adjacent to the classified thickener room, it must have a positive pressure to meet NFPA 820, but it does not require additional alarms.

The electrical room will be provided with a positive pressurization unit to mitigate corrosion effects and will have ductless split-system heat pumps for heating and cooling.

7.7 FOG Building HVAC and Hot Water Supply

The FOG building will also have three HVAC systems, one serving each space. The screening room in the FOG building requires 12 ACH to reduce the classification to Class I, Division 2 in accordance with NFPA 820 Table 9.1.1.1.1 row 1. The space also needs to meet NFPA 30 requirements for Class 1 flammable liquids. This space will be served by a direct-fired NG makeup air handler and a roof-mounted exhaust fan. The airflow rate will be 3,250 cfm and will have a 155 MBH heating capacity. The exhaust rate will be higher than the supply airflow rate so that the room is negatively pressurized in accordance with NFPA 820. The controls will be standalone but this system will have flow detection for monitoring and alarm through the SCADA system.

The hot water mechanical room will be served by separated combustion NG unit heaters, and supply and exhaust fans to maintain a positive pressure.

The electrical room will be provided with a positive pressurization unit to mitigate corrosion effects and will have ductless split-system heat pumps for heating and cooling.

7.8 Maintenance Building

The maintenance building HVAC and plumbing design will be developed using the same base ASHRAE standards used in this section. The specific equipment and area needs require further design development to confirm the facility layout; however, the design will meet all pertinent requirements of the IBC/IFC area ventilation rates where applicable, or IMC ventilation rates.

7.9 Plumbing and Drainage

Three water sources are available at CKTP. Potable, tepid water (1W) will be provided to emergency fixtures required in the PS and septage thickening building. Areas that require hot washdown water, the FOG building, and polymer rooms will have non-potable water (2W) from the CKTP airgap system. All other washdown systems will use the high-pressure plant water (3W) system that uses treated effluent when it is available or 2W when it is not available.

NG will be provided to CKTP to provide heating fuel for the boilers, air handlers, gas unit heaters, and water heaters. The total process facility NG demand for this project is 3.5 MMBtu/hr or 3,500 ft^3/hr.

For the digester pump building and the digester control building washdown water will be provided in all process rooms and at the exterior of the building using 3W. Makeup water for the boiler system will be provided in the digester control building from 2W. In areas with sludge pumps or piping, drainage will be achieved by using flat-bottom profile trench drains with a sump (and sump pumps) to reduce clogging of any floor drains. Other areas will use heavy-duty cast-iron floor drains.

A new potable water line will be provided to the Solids Processing Building to serve the existing emergency fixtures and sinks that are currently being served by the non-potable, airgap system (2W). The exact number of fixtures and configuration will be determined during final design. A new potable water system will be provided for the fixtures that require potable water rather than re-using any non-potable water piping to avoid any potential existing contamination.

This page is intentionally left blank.

8 Architectural Design

The architectural approach for the CKTP Hauled-Waste Upgrades facility buildings will be to provide an overall, cohesive design aesthetic that can be applied to all the new CKTP structures. To accomplish this, a coordinated palette of architectural forms, materials, textures, and colors will be used to establish a contemporary aesthetic that will be commensurate for contemporary commercial waste facilities. Although the individual buildings and structures will house different functions, the goal is that the structural and architectural design will incorporate similar construction techniques and expressions for all the new structures that will be applied consistently, regardless of size and functions be. The intent is to establish a design approach that can be carried forward in future projects as CKTP continues to grow.

8.1.1 Building Codes (After March 15, 2024)

The following building codes will be applied to the architectural approach described in this section:

- 2021 IBC
- 2021 IMC
- 2021 IFC
- 2021 Uniform Plumbing Code
- 2021 Washington State Energy Code (WSEC)
- NEC (NFPA 70)
- 2010 Americans with Disabilities Act (ADA) Standards for Accessible Design

8.1.2 Maintenance Building

While the final location is still being determined, for the purposes of this Basis of Design Report, the new maintenance building will be located east of the existing process building areas near the existing main entrance and wetland to make way for the new digester control, thickening, and odor control buildings. The maintenance building will consist of a central drive-through mechanics shop area; a separate multi-purpose shop; tool storage; painting space; a lube/compressor room; and miscellaneous storage. A separate office area with a visitors' entrance will have offices, workspaces, locker rooms and a break room that will be connected off the central shop area. Support rooms, such as the electrical and mechanical rooms and miscellaneous storage rooms, will also be included adjacent to the central shop area. The construction of the maintenance building will be phased to accommodate future additions for increased functionality. The phasing of the maintenance building is discussed further in Section 13.4.

The maintenance building will be constructed with a combination of concrete masonry and a steel frame. The structure will be constructed as Type IIB construction per the IBC. The office area will be occupancy Type B and the shop and support areas will be Type F-1 occupancy. Storage areas will be occupancy Type S-1. These combined B/F-1/S-1

occupancies will require no fire-rated separation walls. The maintenance building will be fully sprinklered.

See Appendix D for the maintenance building space program and conceptual site and floor plans.

8.1.3 Process Buildings

The process buildings that will require architectural treatment are the digester control, thickening, FOG, and WAS buildings. The process buildings will also be classified as Type IIB construction and S-1 occupancies. The exterior materials will be the same as the maintenance building. Because of their sizes and occupancy types, it is not expected that these buildings will be sprinklered; however, a full life-safety analysis will be conducted during the first stage of detailed design to confirm the fire protection features for each building. It is expected that occupied buildings will have smoke and/or fire detection monitoring that will be tied to the CKTP control system.

8.1.4 Architectural Materials

This section describes architectural materials to be used on the project, including exterior, hollow metal doors and frames, and interior finishes.

Exterior

This section describes exterior architectural materials to be used on the project, including exterior walls, roofing, windows, and louvers.

Exterior Walls

The exterior walls will consist of exterior metal siding over R-10 rigid insulation, air barrier, over concrete masonry or metal framing with R-11 batt insulation and interior wall finishes as scheduled. Below-grade concrete walls will have R-10 rigid insulation to 24 inches below grade.

Roofing

Flat roofs will have R-30 rigid insulation and vapor barrier over the roof structure with either an ethylene propylene diene terpolymer (EPDM) or thermoplastic polyolefin (TPO) fully adhered membrane roofing. Roofs over metal decking will have an additional thermal barrier applied directly to the decking.

Sloped roofs will have standing-seam metal roofing applied over the same roofing substrate for flat roofs.

Windows

Exterior windows will be storefront type with insulated, low-E glazing.

Louvers

Exterior louvers will be aluminum to match the exterior metal siding in which they are located.

Hollow Metal Doors and Frames

Hollow metal doors and frames will be field-painted steel and will have insulated glass transoms.

Interior Finishes

The maintenance building will have exposed concrete masonry in the shop areas and mechanical, electrical, and storage rooms with exposed roof structure. The office area, restroom, and locker rooms will have typical commercial interior finishes with tiled walls and floors in the restrooms and locker room wet areas.

The interior finishes of the process buildings will have exposed concrete and concrete masonry with exposed roof structures. Interior painting will be at the County's request.

This page is intentionally left blank.

9 Structural Design

This section describes structural design standards, criteria, codes, and loads for this project.

9.1 General Design Standards and Criteria

Structural design criteria, applicable codes, and design guidelines are presented in the following sections.

9.2 Applicable Structural Codes and Design Standards

The following codes and standards will be used in the design of the project components and building structures:

- **Building code:** 2021 IBC
- **Referenced standards:**
  - **Structural loads:** American Society of Civil Engineers (ASCE) 7-16 and IBC 2021
  - **Concrete:** American Concrete Institute (ACI) 318-19 and ACI 350-20
  - **Masonry:** The Masonry Society (TMS) 402-16 and 602-16
  - **Structural steel:** American Institute of Steel Construction (AISC) 360-16 and AISC 341-16
  - **Metal decking:** Steel Deck Institute (SDI) RD-2017 and SDI C-2017
  - **Metal joists:** Steel Joist Institute (SJI) 100-20
  - **General:** related American Society of Testing and Materials (ASTM) standards

9.3 Structural Design Loads

The structural design of the buried concrete vaults, structures, digesters, and buildings will be as follows.

9.3.1 Gravity Loading

Gravity loading on the structures includes dead load, live load, and snow load as indicated in Table 9-1. Items noted as TBD will be confirmed in coordination with the geotechnical engineer as part of detailed design.

Table 9-1. Gravity loads

Description	Load
Dead load	
Structural self-weight of structures	
Actual weights of fixed equipment, including contents	
Building roof miscellaneous dead load	10 psf
Roof solar panel dead load	5 psf
Structural fill on top of buried vaults	125 × depth of fill (psf)
Live Load	
Building roof live load Primary roof members over work floor	20 psf or 300 lb point load 2,000 lb
Building floor live load Maintenance or work floors not subject to truck loading Office areas Equipment mezzanine	125 psf or 2,000 lb point load 100 psf 125 psf
Uniform traffic surcharge, equivalent to HL93 truck loading	250 psf [a]
Service uplift based on water surface elevation of	TBD
Snow Load	
Snow load	TBD

a. The combined sewage storage tank has been analyzed for HL 93 loading (moving load + lane loading). The results of the analyses were compared to uniform 250 psf and determined that 250 psf loading is slightly more conservative; therefore, it is decided to use 250 psf uniform loading in the structural models to cut down on the model's running time for moving loads.

9.3.2 Lateral Loading

Lateral earth and groundwater pressures on the combined sewage storage tank and facility building are as indicated in Table 9-2. The overall lateral pressures on the walls are also shown in Table 9-2. Items noted as TBD will be confirmed in coordination with the geotechnical engineer as part of detailed design.

Table 9-2. Lateral loading

Description	Value
Lateral earth and groundwater pressure	
At-rest earth pressure	TBD
Active earth pressure (used with seismic earth pressure)	TBD
Groundwater elevation	TBD
Uniform lateral traffic surcharge	TBD
Maximum fluid pressure inside digesters	TBD
Lateral wind pressures on buildings	
Walls north–south	TBD
Walls east–west	TBD

Description	Value
Roof uplift	TBD
Seismic pressures	
Seismic east–west, inertial loading	TBD
Seismic north–south, inertial loading	TBD
Seismic earth pressures east–west direction, uniform	TBD
Seismic earth pressures north–south direction, uniform	TBD

9.3.3 Seismic Design Criteria

This project has no specific post-earthquake performance objectives other than to meet the 2021 IBC life-safety requirement. However, the County's goal is to minimize damage during a design earthquake to the extent practicable. In addition, the County would like to bring the facility back online following a large earthquake as early as practicable considering the effects of a large earthquake on the County's overall conveyance system. This project will be governed by the 2021 IBC. The key components of the 2021 IBC code and its reference document, ASCE 7-16 Chapters 12, 13, and 15, relevant to ground response and the performance of the facility, include the following:

- The design maximum considered earthquake (MCE) is an event with a 2 percent probability of exceedance over a 50-year exposure period (i.e., a recurrence interval of 2,475 years).
- The design event considers the hazard from all the possible earthquake sources with the defined probability of occurrence. This means that all relevant seismic sources in the project area, including the Seattle Fault, random crustal events, deep intraslab events such as the 2001 Nisqually and 1949 Olympia earthquakes, and offshore Cascadia Subduction Zone events that could result in magnitude 8 to 9 earthquakes, are considered relative to their contribution to seismic shaking of the firm ground beneath the project site.
- The design level of shaking to be used for structural design is two-thirds of the MCE at the ground surface, adjusted for site effects by the site-specific seismic ground response analysis.
- The 2021 IBC's seismic risk category for the project components vary between II and III with importance factors of 1.0 and 1.25, respectively. See Figure 9-1.

IBC design methodologies express the effects of site-specific subsurface conditions on the ground motion response in terms of the "site class." The site class can be correlated to the average standard penetration resistance (N-value) or average shear wave velocity in the upper 100 feet of the soil profile. Based on the subsurface explorations completed at the site, the soil profile would classify as Site Class E. Seismic design parameters, adjusted for Site Class E, are provided in Table 9-3 shown below.

The seismic design criteria for this project are listed in the Geotechnical Design Memorandum (GDM) (S&W 2023). See Table 9-4. Criteria are summarized below:

- Risk Category II or III, Importance Factors: 1.00 or 1.25

- Conform to ASCE 7-16
- Seismic Design Category D, Site Class E
- Per ACI 350-20 Section 21.2.1.5, the storage tank is designed for seismic loads computed using the procedures prescribed in ACI 350.3 and ACI 350-20
- The estimated fundamental periods of the structures are shown in Table 9-3

Table 9-3. Code-based seismic design parameters

2021 IBC parameter	Recommended value
Site class	E
Risk category	II or III
Short-period spectral acceleration, Ss (g)	1.429
1-second period spectral acceleration, S1 (g)	0.504
Site coefficient (Fa)	1.25
Site coefficient (Fv)	1.00
Design short-period spectral acceleration, SDS (g)	1.143
Design 1-second period spectral acceleration, SD1 (g)	0.503
Design earthquake magnitude (Mw)	7.33
Site-adjusted peak ground acceleration (g)	0.726

Table 9-4. Seismic design criteria

Exhibit 6-1: Response Spectrum Parameters

Parameter	ASCE 7-16 Recommended Values
Peak Ground Acceleration (PGA)	0.605g
Short Period Spectral Acceleration (S_S)	1.429
Spectral Acceleration at 1-Second Period (S_1)	0.504
MCE_R Spectral Response Acceleration Coefficient (S_{MS})	1.714
MCE_R Spectral Response Acceleration Coefficient (S_{M1})	0.754
Design Spectral Response Acceleration Coefficient (S_{DS})	1.143
Design Spectral Response Acceleration Coefficient (S_{D1})	0.503
Site Amplification Factor, F_{PGA}	1.2
Site Modified Peak Ground Acceleration, PGA_M	0.726g
Mean Magnitude	7.33

g = acceleration of gravity; MCE_R = risk-targeted maximum considered earthquake

Source: S&W 2023.

Table 1.5-1 Risk Category of Buildings and Other Structures for Flood, Wind, Snow, Earthquake, and Ice Loads

Use or Occupancy of Buildings and Structures	Risk Category
Buildings and other structures that represent low risk to human life in the event of failure	I
All buildings and other structures except those listed in Risk Categories I, III, and IV	II
Buildings and other structures, the failure of which could pose a substantial risk to human life	III
Buildings and other structures, not included in Risk Category IV, with potential to cause a substantial economic impact and/or mass disruption of day-to-day civilian life in the event of failure	
Buildings and other structures not included in Risk Category IV (including, but not limited to, facilities that manufacture, process, handle, store, use, or dispose of such substances as hazardous fuels, hazardous chemicals, hazardous waste, or explosives) containing toxic or explosive substances where the quantity of the material exceeds a threshold quantity established by the Authority Having Jurisdiction and is sufficient to pose a threat to the public if released[a]	
Buildings and other structures designated as essential facilities	IV
Buildings and other structures, the failure of which could pose a substantial hazard to the community	
Buildings and other structures (including, but not limited to, facilities that manufacture, process, handle, store, use, or dispose of such substances as hazardous fuels, hazardous chemicals, or hazardous waste) containing sufficient quantities of highly toxic substances where the quantity of the material exceeds a threshold quantity established by the Authority Having Jurisdiction and is sufficient to pose a threat to the public if released[a]	
Buildings and other structures required to maintain the functionality of other Risk Category IV structures	

[a]Buildings and other structures containing toxic, highly toxic, or explosive substances shall be eligible for classification to a lower Risk Category if it can be demonstrated to the satisfaction of the Authority Having Jurisdiction by a hazard assessment as described in Section 1.5.3 that a release of the substances is commensurate with the risk associated with that Risk Category.

Figure 9-1. Risk category of buildings and other structures for flood, wind, earthquake, and ice loads

Source: ASCE 7-2016: Table 1.5-1.

9.4 Structural Design Load Combinations

The above-listed loads are combined per 2021 IBC guidelines:

1.4D

1.2D+1.6L+0.5(Lr or S or R)

1.2D+1.6(Lr or S or R)+(L or 0.5W)

1.2D+1.0W+L+0.5(Lr or S or R)

1.2D+1.0E+L+0.2S

0.9D+1.0W

0.9D+1.0E

For structures that are subject to earth and fluid pressures:1.4(D+F)

1.2(D+F) +1.6(L+H) +0.5(Lr or S or R)

1.2(D+F) +1.6(Lr or S or R) +1.6 H + (f_1L or 0.5W)

1.2(D+F) +1.0W+ f_1L+1.6H+ 0.5(Lr or S or R)

1.2(D+F) +1.0E+ f_1L+1.6 H + f_2S

0.9D +1.0W+ 1.6 H

0.9(D+F) +1.0E+ 1.6 H

Where:
(D) dead load
(E) seismic load
(S) snow load
(W) wind load
(R) rain load
(F) fluid load
(Lr) live load on roof

f_1 = 1 for places of public assembly live loads in excess of 100 psf (not applicable to this project).

f_2 = 0.7 for roof configuration that do not shed snow off the structure (not applicable to this project), or 0.2 for other conditions.

9.5 New Digesters

Structural design of new digesters will be performed according to ACI CODE-350.3-20 *Code Requirements for Seismic Analysis and Design of Liquid-Containing Concrete Structures (ACI 350.3-20) and Commentary*.

Gravity loading and lateral pressures of water, wind, earth pressures, hydrodynamic, and surcharge will be calculated and applied to a finite-element model (FEM) of the new digesters.

9.6 Existing Digesters and Centrate Tank

Structural analysis of existing digesters and the new centrate tank (existing GT) will be performed according to ACI CODE-350.3-20 *Code Requirements for Seismic Analysis and Design of Liquid-Containing Concrete Structures (ACI 350.3-20) and Commentary*.

Gravity loading and lateral pressures of water, wind, earth pressures, hydrodynamic, and surcharge will be calculated and applied to an FEM of the existing digesters without the digester building in between to check stability, bearing pressure, and structural integrity of the existing structure against current code seismic event.

9.7 Process Buildings

The process buildings are the digester control building, digester process control buildings, thickening building, and FOG building. Structural design of the process buildings will be performed according to IBC 2021, ACI 318-19, TMS 402, TMS 602, AISC 360-16, SJI 100-20, and SDI RD-2017.

Planned construction materials of the process buildings include a steel-framed roof supported on concrete or masonry walls and concrete slab and foundation. Gravity and lateral loads will be calculated and applied to an FEM to determine required framing sizes and spacing, wall thickness and reinforcing, slab thickness and reinforcing, foundation dimensions and reinforcing, and further details. As-needed equipment anchorage and support will be designed per ACI 318-19. The roof decking will function as a structural diaphragm and the walls will function as “special reinforced shear walls” and be designed per ASCE 7-16 and ACI 318-19 or TMS 402.

9.8 In-Plant Pump Station

The IPS is a circular buried pump station (roughly 10 feet in diameter and 14 feet deep) with a valve vault. It will most likely be constructed using precast concrete utility vaults and a manhole. The design will be performed by a precast supplier per HDR’s prescribed loading, drawings, and specifications.

9.9 Maintenance Building

Structural design of the maintenance building will be performed according to IBC 2021, ACI 318-19, TMS 402, TMS 602, AISC 360-16, SJI 100-20, and SDI RD-2017.

Planned construction materials of the maintenance building include a steel-framed roof and steel-framed mezzanine supported on concrete or masonry walls and concrete slab and foundation. Gravity and lateral loads will be calculated and applied to an FEM to determine required framing sizes and spacing, wall thickness and reinforcing, slab thickness and reinforcing, foundation dimensions and reinforcing, and further details. As-needed equipment anchorage and support will be designed per ACI 318-19. The roof decking will function as a structural diaphragm and the walls will function as “special reinforced shear walls” and be designed per ASCE 7-16 and ACI 318-19 or TMS 402.

9.10 Parking and Storage Canopy

Structural design of the parking and storage canopy will be performed according to IBC 2021, ACI 318-19, AISC 360-16, SJI 100-20, and SDI RD-2017.

Planned construction materials of the parking and storage canopy include a steel-framed roof supported on a concrete slab and foundation. Gravity and lateral loads will be calculated and applied to an FEM to determine required framing sizes and spacing, wall thickness and reinforcing, slab thickness and reinforcing, foundation dimensions and reinforcing, and further details. The roof slab will function as a structural diaphragm; the canopy will be designed using cantilever columns per ASCE 7-16, AISC 360, and AISC 341.

10 Electrical Design

CKTP includes electrical system modifications for existing systems and facilities, including the relocation of existing electrical components and equipment. The modifications and improvements to the electrical system are described in this section.

A double-ended motor control center (MCC) will be installed at each of the following locations: thickening building, FOG building, and digester control building. Each of these areas will have an electrical room and each MCC will be installed in the associated electrical room. The MCCs are configured such that scheduled maintenance will not result in full MCC shutdowns; each of the two MCC sections can be shut down independently of each other.

For maintenance building electrical design refer to Section 10.4.

10.1 System Design and Design Criteria

This section presents electrical system design and design criteria for the project.

10.1.1 Electrical Service and Utility Coordination

The existing service from Puget Sound Energy (PSE) for CKTP will remain in place as is. The existing service is received from PSE at 12.47 kilovolts (kV) at switchgear (SWGR) 2940, which was installed as part of the 2016 Resource Recovery project.

A new PSE service will be established for the new maintenance building and will originate from a utility pole on Brownsville Highway. Refer to Section 10.4.

10.1.2 Electrical Distribution System Overview

SWGR 2940 distributes power to SWGR 2950 and SWGR 2970, and SWGR 2940 has a spare fused disconnect section, originally intended for MCC 8902 for reclaimed-water pumping.

SWGR 2970 receives 12.47 kV power from SWGR 2940 and distributes power to two 2,000-kilovolt-ampere (kVA), 12,470-volt (V)–480-wye (Y)/277 V transformers (TFR 2953 and TFR 2954) via fused disconnect switches. Each transformer feeds one side of SWGR 2961. SWGR 2961 is located in the existing SPB.

See Appendix G for a partial CKTP one-line diagram showing existing distribution for SWGR 2970 and SWGR 2961 and proposed modifications to SWGR 2961.

A new standby generator will be added to Bus A of SWGR 2961. SWGR 2961 will feed the new MCCs. Three new MCCs are proposed: thickening MCC, digester control MCC, and FOG and septage MCC. The new MCCs will be split bus, with each side of each new MCC being fed from each side of SWGR 2961.

10.1.3 Electrical Loads

Additional electrical loads are anticipated in each process associated with this project. See individual sections for proposed loads.

10.1.4 Standby Power

The existing 600-kilowatt (kW) generator (GEN 2996) is located east of the existing shop and maintenance building; this generator is proposed to be moved to the area around HH361 and HH313 to the south of the SPB.

The new standby generator output will be routed through existing automatic transfer switch (ATS)-1 in the existing SWGR 2961. The new standby generator is proposed to be 600 kW to match the existing generator. Record drawings suggest that this new generator should be tagged as GEN 2997. It is proposed to locate this new generator next to the relocated GEN 2996.

10.1.5 Uninterruptible Power Supply

Control system components including SCADA computers, programmable logic controllers (PLCs), and essential control and instrumentation equipment will be powered from an uninterruptible power supply (UPS) so that the associated components always have power. UPSs will be designed to carry the estimated load for 20 minutes. UPSs are to provide continuous power to essential control system equipment during brief power outages and/or until the standby generator comes online. Each control panel will have a UPS. SCADA servers will have a rack-mounted UPS. Each SCADA human-machine interface (HMI) workstation will have desktop UPS.

10.1.6 Codes and Standards

The design will be in conformance with adapted codes of the Authority Having Jurisdiction. The following codes and standards latest edition are applicable to this project:

- NFPA 70: NEC, 2014
- Institute of Electrical and Electronics Engineers (IEEE) C2, National Electrical Safety Code
- Illuminating Engineering Society (IES) *Lighting Handbook*
- National Electrical Manufacturers Association (NEMA)
- NEMA MG1, Motors and Generators
- Life Safety Code, NFPA-101-HB85
- American National Standards Institute (ANSI)
- National Electrical Contractors Association (NECA) “Standards of Installation”
- IEEE
- International Society of Automation (ISA)
- Insulated Cable Engineers Association (ICEA)
- Occupational Safety and Health Act (OSHA)
- National Electrical Testing Association (NETA)

- ASTM
- Underwriters Laboratories, Inc. (UL)
- Factory Mutual
- IBC
- WSEC
- NFPA 820

10.1.7 Raceways and Conduits

The minimum size for conduits will be 3/4 inch for interior applications and 1 inch for buried or in duct bank applications. Duct banks will be marked with traceable warning tape located above the duct bank. Roughly 20 percent spare conduits will be provided in duct banks or a minimum of one of each size in the duct bank section.

10.1.8 Boxes, Panels, and Cabinets

Enclosures will be provided based on the location and environmental conditions. See Table 10-1 and Table 10-2 below.

10.1.9 Duct Banks and Separation

Duct banks will be encased in red-dyed concrete and the concrete will be reinforced under roadways and driveways.

Separation will be maintained between power and signal/communications/control systems as required by good engineering practice or code provisions.

10.1.10 Wire and Cable

Copper conductors will be provided for branch circuit wiring and feeders.

Conductors will be constructed from stranded copper and include a 600 V type cross-linked polyethylene high heat-resistant water-resistant-2 (XHHW-2) insulation. Multi-conductor control cables will include No. 14 American Wire Gauge (AWG) conductors with 600 V type XHHW-2 insulation and a common PVC outer jacket. Cables for analog signals will be of the twisted shielded pair (TSP) type and include 600 V insulation and aluminum/synthetic polymer shield, drain wire, and PVC outer jacket. Conductors for VFD-driven motors shall be 600 V type, multi-conductor, shielded power cable to mitigate electromagnetic interference with adjacent wiring circuits.

10.1.11 Material Application and Area Environmental Schedules

Table 10-1 establishes requirements for a given designation. Not all designations are used in this project. Table 10-2 defines the designation for each area of this project. Table 10-1 in conjunction with Table 10-2 show the requirements for each area.

Table 10-1. Material application schedule

Designation	NEMA 250 enclosure type (including pull and junction boxes)	Conduit material	Outlet and device boxes, mounting plates, and fittings	Mounting hardware	Notes
Indoor hazardous areas	7, suitable for classification	RAC	Cast Aluminum	316 stainless steel	
Wet, corrosive areas	4X, metallic	RAC	Cast Aluminum	316 stainless steel	
Chemically corrosive to metals	4X, nonmetallic	PVC	Nonmetallic	Nonmetallic	
Hazardous and corrosive areas	7 or 4X, suitable for classification	RAC	Cast Aluminum	316 stainless steel	
Wet, indoors	4	RAC	Cast Aluminum	316 stainless steel	
Dry industrial	12	RAC	Cast Aluminum	Galvanized	
Dry, indoor, unfinished	12	RAC	Cast Aluminum	Galvanized	Route conduit concealed where noted
Dry, indoor, finished	1	EMT	Sheet metal	Galvanized	Route conduit concealed
Nonhazardous exterior areas	3R	RAC	Cast Aluminum	316 stainless steel	
Wet, damp exterior area	4X	RAC	Cast Aluminum	316 stainless steel	
Hazardous exterior areas	7 or 4, suitable for classification	RAC	Cast Aluminum	316 stainless steel	
Underground, underslab, or concrete-encased	N/A	PVC	N/A	N/A	

Table 10-2. Area environmental designation and classification schedule

Facility	Room/area	Designation	Notes or exceptions
PS and septage thickening building	Electrical room	Dry, indoor, unfinished	Unclassified See Section 7.1
	Polymer room	Wet, corrosive	Unclassified See Section 7.1
	Thickener (RDT) room	Hazardous and corrosive	Class I, Division 2 See Section 7.1 for NFPA 820 reference and ACH
FOG building	FOG room	Hazardous and corrosive	Class I, Division 2 See Section 7.1 for NFPA 820 reference and ACH
	Utility hot water room	Wet, indoors	Unclassified See Section 7.1
	Electrical room	Dry, indoor, unfinished	Unclassified See Section 7.1
Miscellaneous	Exterior spaces	Wet, exterior	Unclassified
	Site	Underground, underslab, or concrete-encased	Unclassified
Digesters 1 and 2 pump building	Roof level stairway doghouse	Wet, corrosive	See Section 7.1 for NFPA 820 reference and ACH
	Mid level	Wet, corrosive	Unclassified See Section 7.1 for NFPA 820 reference and ACH
	Lower level	Wet, corrosive	Unclassified See Section 7.1 for NFPA 820 reference and ACH
Digesters 3 and 4 pump building	Roof level stairway doghouse	Wet, corrosive	See Section 7.1 for NFPA 820 reference and ACH
	Mid level	Wet, corrosive	Unclassified See Section 7.1 for NFPA 820 reference and ACH
	Lower level	Wet, corrosive	Unclassified See Section 7.1 for NFPA 820 reference and ACH
Digester 1	Inside digester	Hazardous and corrosive	Class I, Division 1 NFPA 820-2024 Table 6.2.2(a), Row 16, Line a

Facility	Room/area	Designation	Notes or exceptions
	Envelope extending vertically 10 ft up from top of digester tank cover and 5 ft horizontally from any wall	Hazardous and corrosive	Class I, Division 1 NFPA 820-2024 Table 6.2.2(a), Row 16, Line a
	Envelope extending beyond Class I Division 1 envelope by an additional 15 ft vertically and 5 ft horizontally	Hazardous and corrosive	Class I, Division 2 NFPA 820-2024 Table 6.2.2(a), Row 16, Line b
Digester 2	Inside digester	Hazardous and corrosive	Class I, Division 1 NFPA 820-2024 Table 6.2.2(a), Row 16, Line a
	Envelope extending vertically 10 ft up from top of digester tank cover and 5 ft horizontally from any wall	Hazardous and corrosive	Class I, Division 1 NFPA 820-2024 Table 6.2.2(a), Row 16, Line a
	Envelope extending beyond Class I Division 1 envelope by an additional 15 ft vertically and 5 ft horizontally	Hazardous and corrosive	Class I, Division 2 NFPA 820-2024 Table 6.2.2(a), Row 16, Line b
Digester 3	Inside digester	Hazardous and corrosive	Class I, Division 1 NFPA 820-2024 Table 6.2.2(a), Row 16, Line a
	Envelope extending vertically 10 ft up from top of digester tank cover and 5 ft horizontally from any wall	Hazardous and corrosive	Class I, Division 1 NFPA 820-2024 Table 6.2.2(a), Row 16, Line a
	Envelope extending beyond Class I Division 1 envelope by an additional 15 ft vertically and 5 ft horizontally	Hazardous and corrosive	Class I, Division 2 NFPA 820-2024 Table 6.2.2(a), Row 16, Line b
Digester 4	Inside digester	Hazardous and corrosive	Class I, Division 1 NFPA 820-2024 Table 6.2.2(a), Row 16, Line a
	Envelope extending vertically 10 ft up from top of digester tank cover and 5 ft horizontally from any wall	Hazardous and corrosive	Class I, Division 1 NFPA 820-2024 Table 6.2.2(a), Row 16, Line a
	Envelope extending beyond Class I Division 1 envelope by an additional 15 ft vertically and 5 ft horizontally	Hazardous and corrosive	Class I, Division 2 NFPA 820-2024 Table 6.2.2(a), Row 16, Line b

Facility	Room/area	Designation	Notes or exceptions
CST	Inside tank	Hazardous and corrosive	Class I, Division 1 NFPA 820-2024 Table 4.2.2, Row 32, Line a
	Envelope extending 3 ft from any tank vent	Hazardous and corrosive	Class I, Division 1 NFPA 820-2024 Table 4.2.2, Row 32, Line a
	Envelope extending beyond Class I Division 1 tank vents by an additional 5 ft	Hazardous and corrosive	Class I, Division 2 NFPA 820-2024 Table 4.2.2, Row 32, Line b
	Envelope extending 3 ft from any non-vent opening in the tank	Hazardous and corrosive	Class I, Division 2 NFPA 820-2024 Table 4.2.2, Row 32, Line b
Digester control building	Boiler room	Dry industrial	Unclassified See Section 7.1
	Electrical room	Dry, indoor, unfinished	Unclassified See Section 7.1
Septage EQ tank	Septage EQ Tank 1 (interior, below-grade)	Hazardous and corrosive	Class I, Division 1 NFPA 820-2024 Table 4.2.2, Row 4, Line a
	Envelope extending 10 ft from open tank or open channel	Hazardous and corrosive	Class I Division 2 NFPA 820-2024 Table 4.2.2, Row 4, Line c
	Envelope extending 10 ft from equipment	Hazardous and corrosive	Class I Division 2 NFPA 820-2024 Table 4.2.2, Row 4, Line c
	Septage EQ Tank 2 (interior, below-grade)	Hazardous and corrosive	Class I, Division 1 NFPA 820-2024 Table 4.2.2, Row 4, Line a
	Envelope extending 10 ft from open tank or open channel	Hazardous and corrosive	Class I Division 2 NFPA 820-2024 Table 4.2.2, Row 4, Line c
	Envelope extending 10 ft from equipment	Hazardous and corrosive	Class I Division 2 NFPA 820-2024 Table 4.2.2, Row 4, Line c
In-plant wastewater pump station	In-plant wastewater pump station (interior)	Hazardous and corrosive	Class I, Division 1 NFPA 820-2024 Table 4.2.2, Row 14, Line a

Facility	Room/area	Designation	Notes or exceptions
	Envelope extending vertically 18 in. from opening (hatch) and 3 feet horizontally from opening (hatch)	Hazardous and corrosive	Class I, Division 2 NFPA 820-2024 Table 4.2.2, Row 14, Line b
Solids-processing building (existing)	Electrical room	Dry, indoor, unfinished	Unclassified
	Control room	Dry, indoor, unfinished	Unclassified
Power/blower building (existing)	Electrical room	Dry, indoor, unfinished	Unclassified
Odor control: thickening	Envelope 3 ft or less from leakage sources such as fans, dampers, flexible connections, flanges, pressurized unwelded ductwork, and odor control vessels	Hazardous and corrosive	Class I, Division 2 NFPA 820-2024 Table 4.2.2, Row 18, Line e
	Envelope more than 3 ft from leakage sources such as fans, dampers, flexible connections, flanges, pressurized unwelded ductwork, and odor control vessels	Wet, exterior	Unclassified NFPA 820-2024 Table 4.2.2, Row 18, Line f
Odor control: FOG	Envelope 3 ft or less from leakage sources such as fans, dampers, flexible connections, flanges, pressurized unwelded ductwork, and odor control vessels	Hazardous and corrosive	Class I, Division 2 NFPA 820-2024 Table 4.2.2, Row 18, Line e
	Envelope more than 3 ft from leakage sources such as fans, dampers, flexible connections, flanges, pressurized unwelded ductwork, and odor control vessels	Wet, exterior	Unclassified NFPA 820-2024 Table 4.2.2, Row 18, Line f
Odor control: centrate	Envelope 3 ft or less from leakage sources such as fans, dampers, flexible connections, flanges, pressurized unwelded ductwork, and odor control vessels	Hazardous and corrosive	Class I, Division 2 NFPA 820-2024 Table 4.2.2, Row 18, Line e
	Envelope more than 3 ft from leakage sources such as fans, dampers, flexible connections, flanges, pressurized unwelded ductwork, and odor control vessels	Wet, exterior	Unclassified NFPA 820-2024 Table 4.2.2, Row 18, Line f

10.1.12 Variable-Frequency Drives

Six-pulse VFDs with input line reactors and active harmonic filters will be provided.

VFDs will be housed in the MCC or in NEMA 1 rated, free-standing enclosures.

10.1.13 Motors and Motor Control Centers

Three-phase motors rated at 480 V will normally be provided on all motors 1/2 hp and greater. Other voltage and phase configurations may be evaluated during final design to accommodate equipment as needed. High-efficiency motors will be required. Where motors are driven by VFDs, they will be required to be inverter duty rated.

MCCs will include motor starters, VFDs, breakers, panelboards, transformers, surge protection devices, power monitoring, and other devices as required for motor control and power distribution.

10.1.14 Pilot Devices

Pilot devices will be 30-millimeter (mm) size.

Provide push buttons according to the following convention:

- Red for STOP or OPEN
- Black for START or CLOSE

Indicator lights will be light-emitting diode (LED) type.

Provide indicator lights according to the following convention:

- Green for STOP or CLOSED
- Red for RUNNING or OPEN
- Amber for FAULT

10.1.15 Local Disconnects

Local disconnects will be provided at the equipment powered from MCCs. A power disconnect switch will be provided for HVAC equipment located at the equipment. Disconnects will be fused if required by the equipment manufacturer to maintain UL listing of the equipment.

Where equipment is VFD-driven, the use of a local disconnect will be individually evaluated during final design.

10.1.16 Panelboards

Panelboards will be used for the distribution and protection of branch circuits to receptacles, lights, and other low-voltage loads. Thermal magnetic circuit breakers will be used.

Panelboards will be 3-phase unless otherwise required by equipment served.

10.1.17 Power System Analysis and Arc Flash Study Labeling

The contractor will be required to update the County's Arc Flash Study and Protective Device Coordination Study for new electrical equipment installed. New electrical equipment will be required to carry arc flash labeling.

10.1.18 Grounding

For new structures and buildings, provide a ground ring ground system around the foundation in accordance with the NEC.

10.1.19 Lighting

To the greatest extent possible, energy-saving LED fixtures will be provided suitable for the application.

Emergency illumination will be provided in all appropriate spaces as required by code to ensure life safety, property, and equipment protection. "Bug-eye" type LED lights will be provided for emergency illumination. Battery backup capable of sustaining egress lighting for 90 minutes will be provided for the emergency lights.

10.1.20 Surge Suppression

Surge protection devices will be provided at each of the following power distribution equipment locations within the electrical system: switchboard, MCC, and panelboard.

10.1.21 Seismic Criteria

The project will comply with IBC seismic criteria for electrical equipment, anchorage, support, and bracing.

10.1.22 Identification

The project will use I&C system loop tag numbers for all motors, I&C system devices, and process equipment. Major electrical equipment will be designated with unique identification equipment designations. The specifications will require the contractor to label each cable and conduit.

10.1.23 Power Monitoring

Each of the new MCCs will be provided with an integral power monitor for each power feed.

10.2 Special Electrical Systems

This section presents electrical design for special electrical systems for the project, including the communications and fiber-optic systems.

10.2.1 Communications System

No telephone or paging communication system will be provided for the thickening, FOG and septic, and digester control buildings.

10.2.2 Fiber-Optic Network System

The existing fiber-optic network is used for Ethernet communications of the process control equipment. This includes communications between PLCs, and the HMI workstations. The fiber-optic network will be expanded to connect new process control equipment.

10.3 Equipment Sole-sourcing and Preferences

This section presents electrical equipment sole-sourcing and preferences for the project, including the switchgear, switchboard, MCCs, VFDs, generators, ATSs, and panelboards.

10.3.1 Switchgear

The County does not have any sole-source arrangements or preferences regarding switchgear.

10.3.2 Switchboard

The County does not have any sole-source arrangements or preferences regarding switchboards.

10.3.3 Motor Control Centers

MCCs shall be Allen-Bradley 2100. This is necessary to maintain consistency with the selected drives system (VFD) discussed in the following section.

10.3.4 Variable-Frequency Drives

VFDs shall be Allen-Bradley PowerFlex 753 series. This is necessary to maintain consistency with existing equipment and to provide a drive system that plant staff are trained to repair and can more readily maintain (including spare parts).

10.3.5 Generators

Generators shall be Cummins and operate on diesel fuel. This is necessary to maintain consistency with existing equipment and to provide equipment that plant staff are familiar with and can reliably maintain.

10.3.6 Automatic Transfer Switches (ATS)

The County does not have any sole-source arrangements or preferences regarding ATSs.

10.3.7 Panelboards

The County does not have any sole-source arrangements or preferences regarding panelboards.

10.4 Maintenance Building

The electrical system for the maintenance building will be designed to provide a suitable working environment for office space and to conduct inspections, do repairs, and complete testing of equipment (see Appendix D for planning layout of the facility). The maintenance building estimated area is 19,000 ft^2 in Phase 1, and will increase in future Phases 2 and 3 to about 44,000 ft^2.

For the maintenance building, the electrical loads served by the new service transformer(s), new secondary service feed, and new service entrance equipment will be in the following spaces:

- Central drive-through welding
- Fabrication shop area
- Mechanics shop area
- Multi-purpose shop
- Maintenance and operation specialist room
- SCADA control room
- Office areas
- Visitors' entrance
- Locker rooms
- Break room
- Central shop area
- Restrooms
- Main electrical room
- Electrical room(s)
- Mechanical room(s)
- Information technology (IT)/server/communications room
- Miscellaneous storage rooms

10.4.1 Building Interior Electrical System

Design of the electrical system will eliminate single point of failure to the extent possible to minimize downtime of this facility.

Location of the electrical equipment in shop areas will be based on large loads and its power source being close to reduce the number and length of conduit runs.

10.4.2 Main Electrical Room

New service entrance switchgear rated 480/277 V, four-wire, 60 hertz (Hz), located in the main electrical room, will receive power from the new pad-mounted outdoor service transformer via concrete-encased duct bank. The size of this transformer will be determined by the County based on information in the service application and the summary of the maintenance building loads to be developed during design.

An ATS with bypass will allow transferring critical building loads to a standby generator to ensure occupants' life and safety and to continue operations. A minimum of 48 hours of critical load protection will be provided by the standby generator fuel storage.

10.4.3 Building Critical Loads

For the purposes of this report, the building critical loads (which would need to be maintained during a power loss) are assumed to be as follows:

- UPS
- Central Emergency Lighting System (CELS)
- IT Communications Equipment and Network Equipment
- Security System
- Fire Detection and Alarm System
- Fire Suppression System.

This page is intentionally left blank.

11 Instrumentation and Control Design

This section describes I&C design standards, criteria, control schemes, and new or modified process control for this project.

11.1 General Design Standards and Criteria

The intention of the I&C installed in CKTP is to monitor and control the process. There are various types of instrumentation (mostly installed in-pipe to monitor the process directly), while controls consist mostly of valves and motors to open/close or start/stop to allow or deny the process to proceed, as well as the electronics that process what is going on. Details and general preferences for both instrumentation and controls are called out below.

11.1.1 Instrumentation

Various instruments will be required to monitor the process. The County has expressed a preference for certain types of instruments in certain places. See Appendix K for details on County's instrumentation requirements.

11.1.2 Control Systems

The primary component of the control systems at CKTP will be PLCs. The County has standardized on Rockwell Automation's CompactLogix PLCs using model 1769-L33ER processors as its main processor. The County's preference is to use solely full PLC racks, with no RIO racks. See Appendix K for details on the County's control system hardware preferences. Deviations from the client's preferred PLC hardware are likely based on preliminary design, though they will be minimized to the extent possible.

The overall preference is that each major building or process will be monitored and controlled by an individual PLC. Table 11-1 shows quantity and naming of the proposed PLCs. Currently, there would be a total of nine new PLCs, though it is likely that some of these will change.

Table 11-1. Proposed PLC names and locations

PLC number	Location	Purpose
PLC-100	Maintenance building	Maintenance building monitoring and control
PLC-510	Septage and FOG building	Septage and FOG monitoring and control
PLC-550	Thickening building	Thickening building monitoring and control
PLC-610	Digesters 1 and 2	Digesters 1 and 2 valve and instrumentation monitoring and control
PLC-611	Digester control building	Digesters 1 and 2 motor monitoring and control
PLC-630	Digesters 3 and 4	Digesters 3 and 4 valve and instrumentation monitoring and control

PLC number	Location	Purpose
PLC-631	Digester control building	Digesters 3 and 4 motor monitoring and control
PLC-680	Digester control building	Digester control building monitoring and control
PLC-700	Centrate storage	Centrate storage monitoring and control

PLC Cabinets

Each new PLC shall be enclosed in a standard enclosure sufficiently large to hold the PLC and all associated equipment. Temperature rise calculations shall be performed, and ventilation or air conditioning shall be provided on each PLC cabinet to limit the temperature rise.

Enclosures

Each PLC provided shall be within an enclosure made of stainless steel. Each enclosure shall be rated appropriately for the location—NEMA 4 for any exterior cabinet and NEMA 12 for any interior cabinet. Enclosures shall include a data pocket to hold drawings for that enclosure and shall have a heat- and oil-resistant door seal with a heavy-gauge hinge running the full height of the enclosure.

Network Connection

PLC cabinets will have a small managed network switch mounted within them. If the distances called for require it, a small fiber patch panel to terminate fiber-optic communications cables may be added. Detailed design will call out requirements for each PLC cabinet.

Intrusion Detection

Each PLC cabinet will be equipped with intrusion detection switches that will activate when the cabinet is opened. The operator will be able to disable the associated alarm for a set period in SCADA, but after the set period, the alarm will be re-enabled automatically.

Backup Power

Each new control panel will be provided with a UPS. The UPS will be sized to provide power for the total connected load as follows:

- **Less than 450-watt (W) load** to be supplied with 700 W rated model
- **450–1,200 W load** to be supplied with 1,500 W rated model
- **Greater than 1,200–2,200 W load** to be supplied with 3,000 W rated model

Remote monitoring of the UPS systems will be handled via both a network connection and hardwired signals. The network connection will be to power monitoring software or SCADA, while the three hardwired signals will go to the PLC it powers. The three

hardwired signals shall consist of the following: UPS on battery power, UPS failure or bypass, UPS battery low.

System Communications

Process-critical controls shall be communicated over hardwired connections. Network communications will be allowed only in circumstances where both devices communicate over the same network protocol, and even then, it should be used solely for supplemental data, not for process control. All network communications shall take place over standard Ethernet or fiber-optic network hardware—no serial network connections will be allowed.

Variable-Frequency Drives and Soft Starters

VFDs and network-connected soft starters will communicate with the CKTP control system though both hardwired and networked communications. Process-critical communications (including all equipment commands and basic monitoring) will happen solely over hardwired connections to the CKTP PLC. Network communications will be reserved for non-critical monitoring, specifically including data like energy or power usage and alarm and warning data. All network communications shall be over a network protocol that is understood by both the device communicating (the VFD or soft starter) and the PLC.

Vendor Packages

Network communications for vendor packages will be limited to non-process-critical information such as equipment statuses and alarms. All process-critical information (such as measured process variables, for example) will be sent over hardwired connections to the local CKTP PLC.

UPS and Power Quality Monitors

UPSs and power quality monitors will be equipped with network connections to allow them to connect to a dedicated power monitoring network. They shall be isolated from the normal industrial control system network, and the only information the PLCs shall know about them will be via hardwired connections to PLC input/output (I/O).

Control System Workstations

Each new building shall be equipped with a SCADA workstation that allows operators to view and control the entirety of the SCADA system. Each SCADA workstation shall consist of a standard workstation computer, a UPS backup sized for at least 30 minutes of runtime, and whatever communications equipment is necessary for the SCADA workstation to communicate with the rest of the plant.

11.1.3 Networking Segmentation

Devices communicating over the network at CKTP will be highly segmented into several networks. There will be a minimum of three separate networks—the management, power monitoring, and industrial control system networks. In addition, each individual PLC may have its own isolated network to communicate with VFDs or other local network-enabled

equipment. When possible, network communications shall take place over a network using a redundancy network technology such as a device level ring. See Appendix K and network diagrams for details on network segmentation.

11.2 Control Schemes

This section describes I&C control schemes for this project, including process control narratives (PCNs) and equipment controls.

11.2.1 Process Control Narratives

During design, the engineer shall develop (in consultation with the County) a PCN for each process within CKTP. This PCN shall define how the process equipment will respond to changing process conditions, under what conditions alarms will be annunciated, software interlocks, and similar details of how devices are controlled. A short description of Remote-Auto control for each area is provided in the subsections of Section 11.3 below—more thorough versions will be developed as part of detailed design.

A detailed process control description will consist of the following sections, at minimum:

- Brief overview of the system being controlled
- Remote-Manual control
- Remote-Auto control
- Local control
- Interlocks (software and hardwired)
- Alarms

11.2.2 Equipment Controls

Most process equipment will be controlled from one of two places—either directly in front of the equipment (called “locally”) or remotely through the SCADA system. To determine which mode is active for a piece of equipment, most process equipment will be equipped with hand switches that determine the mode for that piece of equipment. For valves, these hand switches are called OPEN/CLOSE/REMOTE (OCR) switches, while for motors they are called HAND/OFF/AUTO (HOA) switches. Vendor control panels will be equipped with similar switches, though the switch may apply to the entirety of the vendor package rather than individual pieces of equipment with it, as specified for each vendor.

Valves: OPEN/CLOSE/REMOTE

Valves that can respond to commands from the PLC will be equipped with an OCR switch. If a valve is not equipped to respond to commands from the PLC (it is hand-actuated or has only limit switches installed, for example) it will NOT be equipped with an OCR switch.

OCR Switch: OPEN Position

When the OCR switch is in the OPEN position, the valve will continuously move toward the opened position until it is fully opened, at which point it will remain opened. The PLC will be unable to control the valve when the OCR switch is in OPEN, and the operator who moves the switch to OPEN will have full control and responsibility for operation of that valve.

OCR Switch: CLOSE Position

When the OCR switch is in the CLOSE position, the valve will continuously move toward the closed position until it is fully closed, at which point it will remain closed. The PLC will be unable to control the valve when the OCR switch is in CLOSE, and the operator who moves the switch to CLOSE will have full control and responsibility for operation of that valve.

OCR Switch: REMOTE Position

When the OCR switch is in the REMOTE position, the PLC has full control of the valve. PLC control will be provided with both automatic and manual control modes for the operator to control the equipment remotely.

Remote automatic control, when selected by the operator at the SCADA HMI, will control the equipment automatically as defined by the applicable control narrative.

Remote manual control, when selected by the operator at the SCADA HMI, will allow the operator to assume full responsibility for starting and stopping of the equipment identical to the controls provided for local control at the equipment.

Motors: HAND/OFF/AUTO

Motors that can respond to commands from the PLC will be equipped with an HOA switch. Motors that cannot respond to commands from the PLC will not be equipped with and HOA switch, though this is anticipated to be rare.

HOA Switch: HAND Position

When the HOA switch is in the HAND position, the motor will run and remain running so long as the HOA switch remains in the HAND position. If the motor is equipped with a VFD to vary the speed of the motor, the operator will be able to vary the speed of the motor by changing settings on the HMI module of the VFD. The PLC will be unable to control the motor when the HOA switch is in HAND, and the operator who moves the switch to HAND will have full control and responsibility for operation of that motor. The sole exception to this is hardwired interlocks—if a hardwired interlock activates, the motor will stop even if the HOA switch is in the HAND position.

HOA Switch: OFF Position

When the HOA switch is in the OFF position, the motor will stop and remain stopped. The PLC will be unable to control the motor when the HOA switch is in OFF, and the operator who moves the switch to OFF will have full control and responsibility for operation of that motor.

HOA Switch: AUTO/REMOTE Position

In the AUTO or REMOTE switch position, the PLC has full control of the motor, including speed of the motor if it is equipped with a VFD. PLC control will be provided with both automatic and manual control modes for the operator to control the equipment remotely.

Remote automatic control, when selected by the operator at the SCADA HMI, will control the equipment automatically as defined by the applicable control narrative.

Remote manual control, when selected by the operator at the SCADA HMI, will allow the operator to assume full responsibility for starting and stopping of the equipment identical to the controls provided for local control at the equipment.

Vendor Panels

Vendor-supplied equipment will be specified to match project I&C standards. Any exception for allowing non-standard equipment will require approval by the County during final design. Primary control of the equipment will be provided by the area PLC unless a PLC is part of the standard control package from a vendor for its equipment. When a vendor-supplied PLC is provided, communications with the SCADA system will occur directly via Ethernet communications and not be routed through an area PLC.

Emergency Shutdown

At various points throughout CKTP (as determined during detailed design) there will be Emergency Shutdown (also called E-Stop) buttons. Operation of any of these buttons will cause all equipment associated with that shutdown button to immediately move to a minimum energy state and cease otherwise functioning. Manual reset of the switch will be required to resume normal operation of equipment.

An example of this would be an Emergency Shutdown button at the entrance to a boiler room—if an operator noticed that something was extremely wrong with the boiler, he/she could press the E-Stop button on his/her way out the door to ensure that the boiler shut down immediately.

Interlocks

Interlocks are conditions that override normal process control for equipment. There are two types: hardwired and software.

Hardwired Interlocks

Interlocks that are deemed critical to the protection of the equipment and personnel will be hardwired to the motor control circuits. Isolation contacts will be used to transmit the critical interlocks to the PLC for monitoring and alarming. Upon activation, the piece of equipment that is interlocked will immediately cease functioning.

Software Interlocks

Interlocks that are deemed non-critical to the protection of the equipment and personnel will be wired to the PLC. Within the PLC, software will turn off the associated piece of equipment, regardless of remote auto or remote manual commands. All interlocks will be displayed on the SCADA system to explain why the equipment is no longer functioning.

Duty/Standby Equipment

In multiple places throughout CKTP, equipment is designed for a DUTY/STANDBY operation. DUTY/STANDBY is an arrangement in which if any equipment is called to run, the DUTY equipment will start and operate as the process requires. If at any point during that operation the DUTY equipment fails and stops, the STANDBY pump will immediately start running in its place to ensure continuity of the process. If required, the operator can choose how and when the DUTY/STANDBY designations are assigned to equipment. There are several possible control schemes regarding when DUTY/STANDBY is determined:

- **Manual:** The operator will designate a piece of equipment as DUTY and another one as STANDBY. Assignments will not change automatically.
- **Alternation:** When all equipment stops, the DUTY/STANDBY designation automatically changes. This helps to ensure that the pumps have the same number of starts on them.
- **Runtime:** When all equipment stops, the piece of equipment with the lowest number of runtime hours will be designated the DUTY equipment, and the other will be designated STANDBY. This also helps to ensure that runtime is spread fairly evenly across equipment.
- **Time-based:** When a timer has gone off (for example, once per day at midnight), the DUTY and STANDBY assignments change. This can be helpful for equipment that would not otherwise shut down to allow alternation, such as hot water circulation pumps.

The advantages to using an automatic DUTY/STANDBY designation include the following:

- Helps to ensure process uptime with minimal operator intervention, despite equipment failure
- Helps to even out equipment starts and runtimes across all available equipment

Despite the advantages of DUTY/STANDBY designations, they can be used only when both pieces of equipment are physically set up to pump to the same destination. In addition, piping and valving must be set up to allow both pieces of equipment to start up at any time.

11.3 New or Modified Processes

This section describes controls strategies for new or modified processes for this project.

11.3.1 Existing Digesters (Digesters 1 and 2)

The existing digesters are being overhauled significantly, including new mixing equipment, transfer pumps, motor-controlled valving, and HEX systems.

Digester Instrumentation

Each digester is equipped with various instruments to monitor it. This includes both ultrasonic and pressure-based level detection and pressure monitoring within the headspace of the digester. If desired, alarms can be set off when the two level transmitters differ from each other by more than a set amount. This would indicate either a transmitter failure or a buildup of foam within the digester, either of which would require operation attention.

Each digester is also equipped with both vacuum and overpressure relief valves to ensure that the pressure within the headspace stays within acceptable ranges.

Digester Valving

Flow into each digester can come from any or all of several sources, including the FOG building, WAS thickeners, clarifier scum box, sludge-thickening building, or even other digesters. All but the flow from other digesters has a valve that determines whether that flow is allowed into the digester. Each source of sludge will select which digester will receive flow from that source.

For each digester, an operator enters various set points concerning influent flows. For each valved influent flow (FOG, TWAS, clarifier scum, thickened sludge), the operator will either ALLOW or DENY flow from that source for each digester. In addition, if an operator designates a digester as OUT OF SERVICE, all influent valves to that digester shall close and all operator selections shall be set to DENY.

The PLC shall review the operator selections for each type of digester influent and sum them up in a permission signal that is sent to the source of that flow. For example, if none of the digesters were set to allow flow from the TWAS system, the digester PLC would deny the TWAS PLC permission to pump to the digesters. An alarm would also be sounded to notify operators that TWAS did not have an appropriate destination.

Digester Heat Exchangers

Recirculation pumps are variable speed, and they provide sludge flow through the HEX. It is anticipated that the VFDs on the recirculation pumps will be used solely to tweak flow rates slightly – no automatic speed control is currently planned.

Each digester is equipped with a recirculation pump, hot water supply pump, and HEX. DIG from the digester is pumped through the HEX, where heat from the hot water provided by the boilers raises the temperature of the sludge going through the HEX. The inlet and outlet temperature of both the sludge and hot water is monitored to enable efficiency calculations for the HEX. Temperature control is achieved using a three-way valve on the hot water line. If the sludge leaving the HEX is too cool, the three-way valve diverts a little more hot water to the HEX. If the sludge leaving the HEX is too warm, the three-way valve diverts a little less hot water to the HEX. In all circumstances, the hot water supply pump runs. If the three-way valve is entirely open, the HEX is fed with 100% “new” hot water from the boilers. If the three-way valve is entirely closed, the HEX is fed with 100% recycled water from the discharge of the HEX.

If required, piping is in place to allow the recirculation pump from Digester 1 to pump to either Digester 1 or Digester 2. Similarly, piping is in place to allow the HEX for Digester

1 to supply heat to the recirculated sludge for Digester 1 or Digester 2. It is not anticipated that this will be used during normal operations, but it can be used in the case of equipment failure.

The sludge recirculation pumps that provide DIG to the HEXs will modulate the flow rate of the sludge to maintain a specified discharge temperature on the HEX associated with that recirculation pump, per the operator Direct or Indirect selection. If the temperature of the sludge entering the HEX is above an operator set point, the VFD will shut off and recirculation will stop. This is intended to prevent overheating of the DIG.

Digester Mixing Equipment

Digesters 1 and 2 are together equipped with a total of three mixing pumps, which take DIG from the digester and force it through several mixing nozzles within the digester. Four mixing nozzles are always in use and one mixing nozzle is controlled by a control valve, called a “foam buster” nozzle. The operator will enter a time of day and duration, and the control valve on the foam buster nozzle will open at that time and stay open for that duration.

Mixing Pump 1 will be dedicated to Digester 1 and Mixing Pump 3 will be dedicated to Digester 2, while the swing Mixing Pump 2 can be assigned by the operator to either Digester 1 or Digester 2. There is no automatic alternation—if a mixing pump fails, an operator must confirm that valving has been changed before reassigning the swing pump to cover the failed pump.

During normal operation, only two mixing pumps will operate, and they will modulate speed to provide an operator-entered flow rate to each digester. If a foam buster nozzle is being used on a digester, the mixing pump associated with that digester will change speed to produce a different operator-entered flow to maintain a comparable flow rate through each mixing nozzle. Total flow for each digester mixing flow is calculated.

If either of the measured levels in the digester drops below an operator-entered level, the mixing pumps will stop.

Digester Transfer Pumps

Digesters 1 and 2 are each equipped with a grinder and digester transfer pump that pumps DIG out of the digester. Based on the position of various valves, discharge flow from the transfer pump can be sent to the other digesters as well as the centrifuge building for dewatering. The speed of the transfer pump is modulated to meet an operator-entered flow rate.

To operate the transfer pumps, the operator will enter a flow rate and select between a duration or volume set point, then initiate a transfer. The transfer pump will then start up and start transferring DIG to the destination at the entered flow rate. The flow meter on the transfer line will start a totalizer to determine how many gallons of sludge has been transferred. The transfer will continue until either the duration or volume pumped has been reached, whichever was selected. If at any time during the transfer the operator changes the set points related to the transfer, the changed set point will take immediate effect.

If at any time either of the measured levels on the digester drop below an operator set level, the transfer pump for that digester will stop.

The digester grinder will start when the transfer pump starts and it will stop when the transfer pump stops.

11.3.2 New Digesters (Digesters 3 and 4)

The new digesters are similar in design and instrumentation to the revamped existing digesters. The primary difference between Digesters 3 and 4 and Digesters 1 and 2 is the expandable gas chamber above Digesters 3 and 4.

The expandable gas chamber in the headspace of each digester is intended to act as a storage space for digester gas. The vendor package that comes with it includes three instruments—a digester gas chamber level sensor, an air chamber pressure sensor, and a lower explosive limit (LEL) sensor in the air chamber to detect any gas leaks from the gas chamber. Because the level sensor in the new digesters measures the gas chamber height instead of the digester fluid level, all calculations involving the digester level for Digesters 3 and 4 will depend solely on the pressure level transmitter, rather than the combination of level sensors possible in the other digesters.

11.3.3 Digester Control Building

Boilers will be running on NG. A more complete PCN will be provided as part of detailed design.

11.3.4 Sludge-Thickening Building

This section describes new or modified processes for the sludge-thickening building, including thickening equipment, the polymer system, and odor control.

Thickening Equipment

The purpose of the sludge-thickening building is to thicken sludge received from the WAS pumps, septage EQ pumps, or PS pumps. Each of the above incoming lines is instrumented with a flow meter and a total suspended solids (TSS) analyzer. If required, flow from the septage EQ pumps and PS pumps can be run through an inline sludge mixer that runs so long as there is flow through it.

After being metered, sludge to be thickened enters one of three parallel trains of thickening equipment. Each train of thickening equipment consists of an inline mixing valve, a flocculation tank, an RDT, and finally a thickened sludge pump. Directly after the meters, sludge from the various sources is combined and then flows through an inline mixing valve, which mixes in a diluted polymer solution. Sludge then enters a flocculation tank, which is equipped with a single-speed mixer and a tank overflow level switch. The mixer operates based on level—if there is enough level in the tank for the mixer to safely operate, it does so. If needed, an operator can empty the floc tank for cleaning using a drain line with a manual valve.

Blended sludge within the flocculation tank can overflow into the nearby RDT, which separates filtrate from the now-thickened sludge. If needed, a solenoid can open to allow CKTP water into the RDT for cleaning or dilution. Filtrate flows out through a dedicated

filtrate line to the CKTP drain system, while thickened sludge leaves the RDT and falls into a small hopper. The hopper is equipped with a solenoid-controlled flush line for cleaning and a pressure transmitter for level measurement of the thickened sludge within the hopper. A thickened sludge pump is directly connected to the hopper, and the pump changes speed to maintain a constant operator-entered level in the hopper. The discharge of the thickened sludge pump is monitored for excessive pressure, and the pump shuts down if either the discharge pressure gets too high or the level in the hopper gets too low. Post-dilution water can also be added on high pressure as a means to thin the solids for easier pumping.

Downstream from the thickened sludge pump, the flow from each of the three RDTs is combined and sent through a flow meter to the operator's selection of digesters. There is provision in piping and instrumentation for two digesters to be fed simultaneously. If neither flow meter is registering flow while at least one thickened sludge pump is running, an alarm will notify operators of a likely pump malfunction. Per the digester control narrative, the digester must be expecting to receive flow from the RDTs.

Polymer System

The polymer solution that is fed into the sludge lines immediately before the sludge enters the flocculation tanks is provided by the polymer system. Polymer is stored in two separate totes, and the polymer system is set up to allow operators to potentially have different types of polymers in each tote without them mixing.

The polymer system consists of two polymer totes with an associated polymer feed pump, mixing chamber, and solution tank. Each solution tank is instrumented with a non-contact level transmitter as well as both high- and low-level switches. When the level in the solution tank reaches the low level, the polymer feed pump starts and pumps neat polymer to the polymer mixing chamber, where it is mixed with dilution water before going into the solution tank. Through opening or closing manual valves, either mixing chamber can send polymer solution to either solution tank.

Downstream of the polymer solution tanks, three polymer feed pumps provide polymer solution to the three RDTs. If required, each polymer feed pump can pump to any of the three RDTs, but it is anticipated that they will instead be dedicated to an individual RDT. Speed control for the polymer feed pumps is an operator selection between three options—constant polymer flow, polymer to sludge flow ratio, and polymer to solids flow ratio. In all three modes, the polymer feed pump modulates to maintain a flow set point to the associated RDT. In constant polymer flow mode, that flow set point is a constant operator-entered value. In polymer to sludge flow ratio mode, the target flow set point is instead calculated as a ratio of the incoming sludge flow. In the polymer to solids flow ratio, the TSS meter and flow meter on the incoming sludge flow is used to calculate an incoming dry solids value, and the operator enters the polymer concentration and both values are used to calculate a flow rate that will provide the operator-determined number of pounds of polymer per incoming dry tons of solids. These modes will be expanded upon in more detail in the final engineering design.

After the polymer feed pumps, the operator has an option to allow additional dilution water into the polymer line. If the operator allows it, the solenoid on the dilution water line automatically opens when the polymer flow rate is above 0.5 gpm.

Odor Control

The many pieces of equipment within the sludge-thickening building are equipped with foul-air piping that draws foul air away from the equipment. Those foul-air lines converge and go to the odor control system. The odor control system consists of two odor control blowers running in parallel. In normal operation, a single blower runs at an operator-entered speed. If it should fail for some reason, the standby blower will automatically start up at the same speed. Each blower is equipped with a pressure differential transmitter, as well as a downstream filter.

Downstream of the two blowers, mist is injected into the foul air, which then enters a biofilter, where additional water is sprayed on top of it in two places. All three locations that water is provided are controlled by a sprinkler control system that operates independently of the CKTP PLC system.

11.3.5 Septage and FOG Facility

This section describes new or modified processes for the septage and FOG facility, including septage handling, EQ basins, and EQ wet well; FOG handling; and odor control.

Septage Handling

A large portion of equipment control within the septage-handling system is done by a large vendor-supplied system. This overall process summary describes the operation of the entire system, but many portions that are part of the vendor-supplied system are covered in scant detail.

The septage system starts with the facilities to connect to a septage-hauling truck. From the septage-hauling truck, septage will flow through a valve to one of the septage influent boxes. These influent valves will normally be open during a septage unloading process, but they will close automatically if an abnormal pH is detected in the septage being offloaded from the truck. The two septage influent boxes are separated from each other by a septage influent overflow box. They are both equipped with level transmitters, while the septage influent overflow box has a level switch to determine if it is starting to fill. Each of the three septage influent boxes is also equipped with both a manual bar screen and the ability to wash down the box using clean water.

From any of the three septage influent boxes, septage will flow through a valve network to either the degritting systems or a gravity bypass to the decant facility. After a septage load is completed (as detected by the measured level dropping below an operator-entered set point), a solenoid will open to allow clean water into the septage piping downstream of the septage influent box that was just emptied. The downstream piping will be flushed continuously until an operator-set duration has passed. In addition, operators can manually command the solenoid to open to allow for additional flushing of the septage influent piping.

From the influent septage piping, septage flows in the screening and degritting vendor packages. Operational details of these packages are currently unknown, but level within the package, and both pH and flow of the influent coming into it, will be sent to the CKTP

SCADA system. Included within the vendor packages are small skimmers to remove grease and pumps to convey that grease to the FOG-receiving tank.

Septage EQ Basins

Downstream of the septage-handling equipment, incoming septage flow then enters one of two septage EQ basins. For each degritting system, operators will choose which septage EQ basin flow from the system will enter. Motorized valves will then open or close as needed to allow flow from either degritting package to either of the septage EQ tanks. Operator selection of destination for flow from each degritting system can be independent, as there are sufficient motorized valves to handle any configuration.

Each EQ tank is equipped with a single-speed mixer. When the level rises above an operator-entered level set point, the mixer will run. When the level drops below an operator-entered level set point, the mixer will stop.

Each EQ tank is equipped with a pH probe and a non-contact level transmitter. The PLC system will calculate the volume of septage in each tank based on the level transmitter and the geometry of the tank. Equations will be provided as part of detailed design.

Flow will leave the EQ tanks in one of two ways—through the slide gate installed for that purpose or through the overflow into the other EQ tank. The slide gates are open/close only—if an operator indicates that they should be open, they fully open, and if not, they fully close. This allows an operator to choose which EQ tank is hydraulically connected to the Septage EQ Wet Well. If one EQ tank is very full, it will overflow using the built-in overflow structure between the two EQ tanks, allowing flow to enter the other tank.

Septage EQ Wet Well

The EQ wet well downstream of the EQ tanks accepts flow from the two slide gates on the EQ tanks. The wet well is equipped with a non-contact level measurement instrument, a backup high-level float switch, and two submersible pumps to pump the septage out of the wet well. The pumps are equipped as duty/standby pumps, and therefore only one pump should be running at any given time. If the duty pump fails for some reason, the standby pump will immediately take over. Both pumps are equipped with VFDs, and they can be run in either of two operator-selected modes and one non-operator selected mode. Fill and Drain, Set Volume and Level Hold are the operator-selected modes, while Max Constant Flow is the override mode.

Because of downstream process limitations, the septage wet well pump should never run at full speed. Doing so would provide more flow than the downstream equipment can handle. As a result, if in any control mode the flow reaches an operator-entered maximum flow rate, the running pump will lower its speed until the flow set point is reached.

In Fill and Drain mode, the duty pump turns on at an operator-defined speed when the level in the wet well reaches an operator-defined high level. The pump continues to run at that operator-defined speed until the level in the wet well reaches an operator-defined low level, at which point it turns off and the cycle restarts.

In Set Volume mode, the operator will enter a volume of desired flow and a duration over which that flow should be pumped. The PLC will then convert those inputs to a flow set

point. If that calculated flow set point is higher than the operator-entered maximum flow set point, the maximum flow set point is used instead. The duty pump will then start and vary speed to maintain the flow set point. The duty pump will continue varying speed to maintain the flow set point until a totalizer based on the flow meter downstream indicates that the operator-entered volume has been reached, at which point the duty pump will turn off.

In Level Hold mode, the operator will enter a level setpoint that the pumps should maintain within the wet well. There are two PID loops that run in series to accomplish this – the Level PID and the Flow PID. The speed of the duty pump is controlled based on the Flow PID, and the setpoint for the flow PID is automatically changed based on the output of the Level PID. The maximum flow called for by the Level PID shall be no more than the Maximum Constant Flow.

In addition to the two operator-entered modes above, the PLC will enforce a Max Constant Flow mode. If the level in the wet well reaches the high-level switch, the PLC will record the current mode and then switch to Max Constant Flow mode. In this mode, the duty pump will start and modulate speed to maintain the operator-entered maximum flow rate for the system. Once this mode has been started, this mode will continue until the level in the wet well reaches an operator-defined low level, at which point the previous mode will be resumed.

In all modes, if the level in the wet well drops to an operator-entered low setpoint, all Septage EQ wet well pumps will immediately stop.

FOG Handling

The FOG-receiving system is quite similar to (though slightly simpler than) the septage system. It consists of a single truck unloading connection leading to a rock trap and a vendor-supplied FOG-screening system. Following the screening system, flow will go into a receiving tank, and from there be pumped to the selected digesters.

The front half of the FOG-receiving system normally operates in a batch mode, and each batch would start off with a driver entering his/her credentials into the vendor-provided panel near the unload point. Once the credentials have been accepted, the driver would connect to the truck unload connection and begin unloading the truck. Flow would go through a vendor-controlled valve, through a small rock trap, then into the FOG-screening system, which is a large vendor-provided package. The screening system will remove some debris from the flow, and the rest will be sent to the FOG-receiving tank.

The FOG-receiving tank is equipped with a non-contact level instrument as well as a drain line and a water flushing line. Prior to a truck unloading, the level in the receiving tank will be relatively low, allowing the tank to receive the flow from the entire truck in one go. Upon level in the receiving tank reaching an operator-entered high-level set point, one of the two FOG feed pumps will start to pump FOG to the selected digesters. See the digester PCN for details on how which digester is fed is determined. Once the level in the receiving tank reaches an operator-entered low-level set point, the FOG feed pumps stop and a flushing sequence starts. Each pump is equipped with a hot water line controlled by a solenoid for flushing. Each pump is also equipped with a dedicated flow meter that measures how much FOG each pump moves.

Because the FOG system will need frequent flushing, a flushing sequence is provided. The flush sequence will run after any pumping cycle is complete or when triggered manually by an operator. A flushing sequence consists of the following: with the level in the receiving tank low, two solenoids open to allow hot CKTP water into the piping upstream of the receiving tank and directly into the receiving tank washing spray heads. This hot water fills the receiving tank until an operator-entered level is reached. When the level is reached, the solenoids close and the FOG feed pumps pump the receiving tank down to the same low level as before.

Odor Control

The many pieces of equipment within the septage and FOG building are equipped with foul-air piping that draws foul air away from the equipment. Those foul-air lines converge and go to the odor control system. The odor control system consists of two odor control blowers running in parallel. In normal operation, a single blower runs at an operator-entered speed. If it should fail for some reason, the standby blower will automatically start up at the same speed. Each blower is equipped with a pressure differential transmitter and a downstream filter.

Downstream of the two blowers, mist is injected into the foul air, which then enters a biofilter, where additional water is sprayed on top of it in two places. All three locations that water is provided are controlled by a sprinkler control system that operates independently of the CKTP PLC system.

11.3.6 In-Plant Pump Station

An IPS receives flows from various sources around CKTP, including sump pumps, drain lines, the CST, and digesters. The IPS system is entirely vendor-controlled, and is equipped with three submersible pumps, a non-contact level transmitter, and high- and low-level switches. A flow meter is installed on the discharge.

Two pumps will serve as duty pumps in a lead/lag arrangement, with the third pump as standby. If a duty pump fails for any reason, the standby pump will take its place promptly.

The In-Plant Pump Station can operate in several modes: Fill and Drain and Level Hold.

In Fill and Drain mode, the lead duty pump turns on at an operator-defined speed when the level in the wet well reaches an operator-defined high level. If the level continues, the lag duty pump will also turn and the two pumps will be operated to match speed and flow. The pump(s) continue to run at that operator-defined speed until the level in the wet well reaches an operator-defined low level, at which point they turn off and the cycle restarts.

In Level Hold mode, the operator will enter a level setpoint that the pumps should maintain within the wet well. There are two PID loops that run in series to accomplish this – the Level PID and the Flow PID. The speed of the duty pump(s) are controlled based on the Flow PID, and the setpoint for the flow PID is automatically changed based on the output of the Level PID. If desired, the operator can disable the Level PID and manually enter a flow setpoint into the Flow PID.

11.3.7 Centrate Storage System

This section describes new or modified processes for the centrate storage system, including centrate storage and odor control.

Centrate Storage

This project involves multiple changes to the existing CKTP's centrate system. In addition to the existing centrate pumps (which are being retained), new centrate pumps are being added to pump from the existing centrate sump. They will operate in fill-and-drain mode, where when the centrate sump reaches an operator-entered high-level set point, the duty pump will activate to pump centrate from the existing centrate sump to the new CST. When the centrate sump reaches an operator-entered low-level set point, the duty pump will stop. Each centrate pump is equipped with both suction and discharge pressure gauges and switches, activation of which will stop the associated pump. When they run, the centrate pumps pump centrate through a common discharge flow meter, which meters how much centrate they pump.

Downstream of the centrate pumps is the refurbished CST, which is equipped with a non-contact level transmitter and two discharge pipes. The first (preferred) discharge pipe leads to a control valve, while the second acts as an overflow. Both pipes lead to a common flow meter before going to the IPS. The control valve on the main discharge line normally operates based on the measured flow rate of centrate leaving the storage tank.

Odor Control

The IPS and the centrate storage systems are equipped with foul-air piping that draws foul air away from the equipment. Those foul-air lines converge and go to the odor control system. The odor control system consists of two odor control blowers running in parallel. In normal operation, a single blower runs at an operator-entered speed. If it should fail for some reason, the standby blower will automatically start up at the same speed. Each blower is equipped with a pressure differential transmitter as well as a downstream filter.

Downstream of the two blowers, mist is injected into the foul air, which then enters a biofilter, where additional water is sprayed on top of it in two places. All three locations that water is provided are controlled by a sprinkler control system that operates independently of the CKTP PLC system.

12 Preliminary Civil Design

The following sections outline the design standards for the overall site civil design, including primary utilities. Preliminary-level site plans and major process piping corridors are discussed and included in Appendix H.

12.1 Design Components

The site civil design will incorporate the following key assumptions and design criteria:

- The maintenance building and associated road circulation, storage, fencing, and parking (approximately 3 acres of new improvements).
- New road access from Brownsville Highway into the newly acquired property to the east of CKTP.
- Site topography, grading, and access to the following structures:
  - Three new odor control facilities (biofilters and fans)
  - New centrate tank refurbished from the existing GT
  - Two existing digesters (refurbished) with a new centrally located process control building
  - Two new digesters (refurbished) with a new centrally located process control building
  - Septage-receiving station and vaults (includes access for haulers and truck washdown)
  - FOG building and receiving station (includes access for haulers and truck washdown)
  - Digester control building (boilers and electrical)
  - PS and septage thickening building
  - New maintenance building to replace the existing facility, which will be demolished
- Site drainage for new improvements will be collected and conveyed to an existing facility for pumping and treatment. No improvements to the existing stormwater systems are anticipated.
- Site water supply as follows:
  - Supply lines will be based on the existing 1W, 2W, 3W, and fire protection water (FP). These lines are outlined in the 2015 site utility schematic plan (Appendix H).
  - 1W will be used for the maintenance building primarily, with additional connections for the existing potable water fixtures in the solids processing building and for safety showers or an eyewash in the polymer room of the PS and septage thickening building. 1W from existing on-site water mains is

assumed to be sufficient to provide necessary pressure and flow, and metered upstream of all improvements.

  - Process water uses for 2W and 3W will be routed to individual facilities as needed. Water uses at each facility are outlined in Section 7.
  - FP will be provided, extended from the existing 8-inch-diameter fire protection loop, for new hydrants where required and a new fire sprinkler supply line to the maintenance building. Existing FP water mains are assumed to be sufficient to provide necessary fire flow, and metered upstream of all improvements.

- Sanitary sewer will be extended from the existing sewer system on site by gravity side sewers from sewer mains in proximity to the new improvements.
- Curbs, paving, and other improvements necessary for demolition will be provided to allow construction of new improvements.
- Routing and pads for underground power supply, communications, and NG (if required) will be shown on the civil plans for coordination; see other sections for specifics of the equipment using these utilities.
- NG will be brought to the site by the County in conjunction with the local utility. As part of this project, it is assumed that an NG pipe loop will need to be established around the project area to allow for service to the existing WGB, new boilers (digester control building), and other HVAC equipment that will use NG (see Section 7).
- Yard piping, support systems, and slabs for process systems will be shown on the civil plans for coordination purposes.

12.1.1 Design Vehicles

New roadways will be designed to accommodate multiple types of vehicles including passenger vehicles and passenger trucks, which will be used as site vehicles. The controlling vehicle for design will be the 40-inch wheelbase truck (WB-40). Turning radii around the site where the WB-40 will access will accommodate the vehicle. In addition, the roads will need to be designed to provide fire access as required by the local fire authority.

12.1.2 Pavement and Surfacing

Roadways for vehicular traffic will include asphalt paving based on geotechnical recommendations.

The pavement design shall provide, at a minimum, the following:

- Unpaved areas will be surfaced to prevent soil erosion by wind and water, support pedestrians and light vehicles (including four-wheel-drive vehicles), and repress undesirable vegetation.
- Paved on-site roads will have a design speed of 20 miles per hour.
- Maximum road grade shall be 10 percent for paved roadways and 12 percent for gravel roadways.

- Cross slopes for finished surfaces shall promote drainage and shall be a minimum 0.5 percent for concrete and 1.0 percent for asphalt. Roads may be inverted crown with drainage down the center (not preferred but allowable if alternates do not exist), sloped one way or crowned to provide drainage to concrete curb.

12.2 Grading

Grading for the site will target a balance to maintain cut and fill on site where possible and minimize import or export. To achieve this, materials on site are assumed to be suitable for this purpose. A soils report will be completed and evaluated during the detailed design to provide guidance for the design. New buildings and foundation slabs will be a minimum of 6 inches above surrounding grades and the grade will be sloped away to ensure that water flows away from the buildings.

12.3 Clearing and Demolition

Demolition and clearing activities for this site will consist of removal of specific existing facilities, re-leveling, clearing, and grubbing new construction areas. Other demolition activities will include saw-cutting the existing pavement; removal of curb, asphalt, and utilities to make way for new improvements; and installation of utilities and driveway connections.

Specific major areas of demolition (not including general site civil or piping/utilities) will include the following:

- Existing digester control building between Digesters 1 and 2
- Buried diesel fuel tank south of Digesters 1 and 2 (no longer needed once boilers are replaced per Section 7)
- Existing maintenance building
- Existing septage-receiving station
- One existing GT and the associated grit handling/control building (the remaining GT will be repurposed as the centrate EQ tank)
- Existing IPS

12.4 Erosion Control

Erosion control will be implemented prior to construction activities on the site. Erosion control systems will include best management practices for prevention of erosion during construction. Because of the dispersed location of improvements on the site phasing will likely be included in the approach to erosion control. Erosion control systems will consist of various measures, some of which are as follows:

- Stabilized construction entrance
- Inlet protection
- Clear demarcation of clearing limits
- Perimeter protection such as filter fabric fences or straw wattles

- Temporary sedimentation collection ponds
- Sweeping
- Water truck for dust control
- Described phasing and construction sequencing

12.5 Stormwater

Stormwater is currently collected on site and conveyed to an existing collection facility for treatment and discharge. New facilities will be connected or reconnected to the existing collection facility. Existing conveyance systems are assumed to be sufficiently deep and of capacity to allow connection and gravity flow. No pumping systems are anticipated for stormwater.

12.6 Utility Piping

Materials of construction anticipated for new utilities will be as follows:

- **1W:** PVC Schedule 80/copper Type K (less than 4 inch diameter, PVC preferred); PVC C900 (4 inch diameter and larger)
- **Sanitary sewage:** PVC standard dimension ratio (SDR) 35/ductile iron (Class 52)
- **Stormwater:** PVC SDR 35/Advanced Drainage Systems (ADS) N-12
- **NG:** ASTM A53 steel
- **3W/2W):** PVC Schedule 80/ASTM A53 steel
- **General process (sewage/sludge):** ductile iron (Class 52; various linings)

12.7 Site Layout

See Appendix H for preliminary site layout drawings with the proposed location of new structures and primary routing corridors for major process piping.

13 Permitting, Project Delivery, and Project Cost

This section details the expected permitting, delivery method, and opinion of probable construction cost (OPCC) for the project.

13.1 Project Permit Matrix

Implementing a major CKTP upgrade requires extensive permitting as well as State Environmental Policy Act (SEPA) review and compliance with the State Environmental Review Process (SERP). Kitsap County will be SEPA lead agency with application and threshold determination likely at 60% with submittal of the Conditional Use Permit – Minor Amendment application. Through the preliminary planning and design effort, the project team developed a summary of necessary permits associated with the proposed upgrades. The management of the permitting process included a strategic and integrated approach. This approach included engaging regulatory agencies early and often regarding the project and fostering a close relationship throughout the process, to help to avoid unexpected requirements and delays in the approval of permits. The permits listed in Table 13-1 have been identified and are in various stages of procurement as the design has progressed. The draft SEPA checklist is provided in Appendix J.

Table 13-1. Project permit matrix

Agency	Permit/approval	Typical processing times	Design level for application
USACE	*Clean Water Act (CWA) Section 404 Permit*	12–18 months	60%
	National Historic Preservation Act (NHPA) Section 106 Review	3–6 months	0%–30%
USFWS/NOAA	*Section 7 Endangered Species Act (ESA) Compliance*	Concurrent w/ USACE	30%
DAHP	*EO 21-02 Compliance*	3–6 months	0%
Ecology	*CWA Section 401 Water Quality Certification*	12–13 months	30%
	Coastal Zone Management (CZM) Consistency Determination	Concurrent with CWA 404, if needed [a]	60%
	Ecology notification on capital project with existing NPDES permit	As needed	N/A
	State Environmental Review Process (SERP)	Concurrent with project development and permitting	N/A
WDFW	*Hydraulic Project Approval (HPA)*	1.5 months	60–90%
PSCAA	NOC/Order of Approval	20 days minimum	90%

Agency	Permit/approval	Typical processing times	Design level for application
Kitsap County DCD	Pre-application	14 days	0%–30%
	Building Permit (Commercial)	TBD	60%–90%
	Site Development Activity Permit: Grading Level 1, 2, or 3	TBD	60%
	State Environmental Policy Act (SEPA)	2 – 4 months	60%
	Conditional Use Permit – Minor Amendment	2 - 4 months	60%
	Road Approach Permit	2–3 months	90%
PSCAA	NOC: modified air pollution source	1 month	90%

Permits in italics are to be confirmed with field studies and on-site truthing.
a. If a Section 404 is required, the USACE consults with USFWS, NMFS, DAHP, and Ecology as part of its review.

13.2 Delivery Method

The proposed improvements at CKTP are required to avoid potential existing digester failure. As such, time is of the essence in designing and constructing the upgrades. Part of the preliminary design process included a broad review of possible project delivery methods. The *Collaborative Delivery Workshop Report*, included in Appendix L, presents the results of a workshop held on July 18, 2023, to evaluate methods for delivering the design, construction, and operation of the project. The purpose of this workshop was to make a recommendation to the Public Works Division (PWD) of Kitsap County on the most beneficial delivery method for the project. The project delivery methods considered include the following:

- Design-Bid-Build (DBB)
- General Contractor/Construction Manager (GC/CM)
- Design-Build (DB)
- Progressive Design-Build (PDB)
- Design-Build Operate (DBO)

The project delivery options were discussed and ranked against evaluation criteria. CKTP staff preferred options that prioritized cost and scheduling certainties because of safety factors of continuing operation of existing digesters at the end of their service life.

The DBB method was used as a baseline to compare against other delivery methods. As a conventional, linear-based delivery method, DBB continues to have success over decades of use. Strengths of the DBB approach include its well-understood risk allocation, predictable schedule, proven and familiar methodology, and traditional roles.

However, multiple contracts, deliverables, and procurements are required, as well as a comparably extended timeline.

GC/CM is a collaborative delivery method in which the County hires a design engineer and a GC/CM under separate contracts. In many ways it is similar to the DBB method but has the additional benefit of collaboration between the Designer and the Contractor.

The DB methods, which include PDB and DBO deliveries, have a single contract for design and construction. This collaboration can shorten the project schedule and reduce project costs. However, these methods can add complexity and require a more involved procurement phase.

Based on CKTP staff's criterion ranking, the GC/CM and PDB alternatives outweighed the DBB, DB, and DBO methods. The County elected to pursue permission from the Project Review Committee (PRC) as the next step in the pursuit of using GC/CM. The PRC controls the ability of agencies in the state of Washington to use alternative project delivery methods. CKTP staff, along with HDR, presented to the PRC on September 28, 2023, and received unanimous approval to use the GC/CM process for the project.

13.3 CKTP Process Upgrades Phasing

Currently, the construction is set to be phased with the following items undergoing construction first:

- New thickening building
- New digester control building
- New digesters
- New septage receiving

These items are critical to CKTP's continued operations and permit compliance. Thickening and digester control facilities must be constructed prior to construction of the new digesters or at the same time. Commissioning of the new digesters should include the new septage receiving facility because of its new capabilities of metering loads.

The second-phase items will follow closely and possibly overlap the first phase of construction:

- FOG receiving
- Centrate equalization and storage
- Existing digester rehabilitation
- IPS
- Maintenance building

These items are all part of the project but may be constructed following the first phase of construction. Rehabilitation of the existing digesters may not take place until the new digesters are fully commissioned. The maintenance building will connect to many of the site's utilities, but it does not perform a direct treatment function and has greater flexibility with its construction schedule.

13.4 Maintenance Building Phasing

To facilitate construction of the new digesters, the existing maintenance building will need to be demolished. A new maintenance building will be constructed to serve CKTP staff. The building layout is included in Appendix D and includes the following spaces;

- Office areas for electrical/I&C, mechanics, and facility/pump station O&M workgroups
- Multi-function conference room and kitchenette
- Secured and unsecured tool storage areas, with loading dock
- Mechanics shop with drive aisle and loading dock
- Welding shop
- Fabrication shop
- Electrical/I&C shop
- Locker rooms
- Covered storage
- Restrooms (per code)
- Utility areas (per code)
- Handwash sink/emergency eyewash (per code)
- Building electrical room
- Fire riser room
- Employee/visitor parking
- Uncovered parking areas for mechanics workgroup fleet vehicles

In the future, additional spaces may be needed to accommodate County staff needs for workspaces and storage. The Maintenance Building will be designed with this consideration in mind, however design of future phases is not being pursued at this time.

13.5 Opinion of Probable Construction Cost

Through this BOD development, HDR has prepared an OPCC for the expected CKTP upgrades. The level of detail and contingency for the OPCC follow the Association for the Advancement of Cost Engineering (AACE) International Recommended Practice 18R-97 guidelines for a Class 4 estimate, which includes preliminary elements and has an accuracy range of -15 percent to -30 percent on the low side and +20 percent to +50 percent on the high side.

The OPCC is intended to be used as a check that the project is within the assumed budget and is based on the best judgment of experienced professionals generally familiar with the industry. However, because of the uncertainty of labor/materials prices and market/bidding conditions, the OPCC is not guaranteed to be the same as the actual construction cost.

The total OPCC for the proposed upgrades, as defined herein and detailed in Appendix M, is $98,557,000.

13.5.1 Operational Costs

Annual operational costs for the major processes listed in this report are summarized for three main items:

- Natural gas (building heating and digester heating)
- Electrical load (major process equipment)
- Polymer use (for thickening of primary sludge and septage)

The 20-year present value for these three operational costs assumes a 3 percent escalation and a 5 percent discount rate, along with the following:

- Emulsion polymer totes = $4,000 each
- Electrical cost = $0.08 per kilowatt-hour (kWh)
- Natural gas = $1.20 per therm (100,000 Btu)

It should be noted that many of these costs include facilities that are already in operation (such as the existing digesters) and consequently are not added costs to the current system, but a high-level estimate of the overall operational cost for these categories relative to the processes that are part of this project (whether they are completely new systems or replacements of existing systems). Process and NG uses were assumed as ratios of the maximum rates, with increasing quantities over the 20-year period.

The operational cost 20-year present value was estimated at $11.3 million.

This page is intentionally left blank.

14 References

Ecology (Washington State Department of Ecology)

2022 Statewide General Permit for Biosolids Management. Solid Waste Management Program. Ecology Publication 21-07-006. June. Accessed at: https://fortress.wa.gov/ecy/publications/summarypages/2107006.html.

2023a *Criteria for Sewage Works Design.* Ecology Publication 98-37. Accessed at: https://apps.ecology.wa.gov/publications/SummaryPages/9837.html. May.

2023b Wind/Pollutant Rose. Washington's Air Monitoring Network, Air Quality Program. Accessed at: https://enviwa.ecology.wa.gov/Report/PollutantRose, September 27.

Google Maps

2023 Map of project location, showing off-site receptor boundary for CKTP. Accessed at: https://www.google.com/maps, September 27.

HDR (HDR Engineering, Inc.)

2021 Technical Memorandum: *Central Kitsap Treatment Plant: Anaerobic Digester Mass Balance.* July 28.

2022 *Summary of Field Testing for Biological Nutrient Removal.* December 16.

Metcalf & Eddy/AECOM

2014 *Wastewater Engineering: Treatment and Resource Recovery.* 5th Edition. McGraw-Hill Higher Education.

Murraysmith

2022 Technical Memorandum: *Central Kitsap WWTP Liquid Hauled Waste Study.* July 22.

Rain Bird

2023 Rain Bird website. Accessed at: store.rainbird.com, September 27.

S&W (Shannon & Wilson)

2023 Geotechnical Design Memorandum: *Kitsap County Hauled Waste Upgrades.* S&W Publication 110699-003. November 14.

Washington State Legislature

2023 Washington Administrative Code (WAC) Section 173-240-060. Engineering report. Accessed at: https://app.leg.wa.gov/WAC/default.aspx?cite=173-240-060.

Zahller, J.D.; Bucher, R.H.; Ferguson, J.F.; Stensel, H.D.

2005 Performance and Stability of Two-Stage Anaerobic Digestion. *Proceedings of the 78th Annual Water Environment Federation Technical Exhibition and Conference*; Washington, D.C., Water Environment Federation: Alexandria, Virginia. October 29–November 2.

This page is intentionally left blank.

Appendix A. Preliminary Process Workshop Summary

SOLIDS HANDLING PROCESS WORKSHOP

CENTRAL KITSAP TREATMENT PLANT (CKTP)

PLANT SOLIDS AND LIQUID HAULED WASTE UPGRADES

KITSAP COUNTY, WASHINGTON

1

PURPOSE OF THIS WORKSHOP?

1. DISCUSS WHAT IS THE OVERALL PROCESS CONFIGURATION
2. DISCUSS WHERE WILL EACH PROCESS TAKE PLACE

2

THIS WORKSHOP IS NOT FOR:

1. EQUIPMENT SELECTION
2. AUXILIARY DESIGN COMPONENTS (BOILERS, ODOR CONTROL, ETC.)

3

Next Steps:

1. Digester and Thickening Equipment Selection Workshop: July 24
2. Septage/FOG Equipment Workshop: August 23

4

THREE PROCESSES TO CONSIDER:

1. DIGESTION
2. THICKENING
3. SEPTAGE/FOG

- Some extra topics if we have time

5

DISCUSSION APPROACH:

1. Discuss each topic individually, with recap at the end
2. Final overall recap at conclusion (did we answer our questions and what are those answers)

6

Project Alternatives Workshop

HDR

Criteria Weighting Summary

1	**Resilient System** Proven Technology Reliable Equipment and process Redundant Capacity Minimal Equipment Downtime Operational Flexibility Optimizes use of available space and infrastructure	34%
2	**Readily Implementable** Standard Construction Methods Minimal Operations Disruptions Readily attainable permits Short Design & Construction Period No Long Lead Time Products	24%
3	**Operation and Maintenance Requirements** Leverages Automation Operational Simplicity Consistent with Current Operations Improves working environment and safety Improves performance of impacted processes	21%
4	**Non-Proprietary Equipment** Equipment is readily available and open source	7%
5	**Resource Responsibility** Energy Aware Minimizes Chemical Consumption Repurposing Existing Facilities Non-Potable Availability Reduced net GHG emissions	7%
6	**Community Impacts** Reduces Odor, Noise, Traffic, Visual impacts, Spills, Septage Hauler Accomodations	3%
7	**Anticipates Potential Future Regulations** Considers current best understanding of regulatory direction	3%

7

FLOWS AND LOADS:

SCENARIO			2028		2042		NOTES
			AAF	MMF	AAF	MMF	
SEPTAGE	**UNDILUTED**	**FLOW (gpd)**	30,272	43,006	52,421	74,472	CKTP LIQUID HAULED WASTE STUDY TM; MURRAYSMITH, JULY 2022, TABLE 6
		TOTAL SOLIDS (lb/d)	5,319	7,557	9,212	13,087	CKTP LIQUID HAULED WASTE STUDY TM; MURRAYSMITH, JULY 2022, TABLE 7
	DILUTED	**FLOW (gpd)**	138,900	137,300	240,400	341,600	CKTP LIQUID HAULED WASTE STUDY TM; MURRAYSMITH, JULY 2022, TABLE 11
		TOTAL SOLIDS (lb/d)	5,300	7,600	9,200	13,100	CKTP LIQUID HAULED WASTE STUDY TM; MURRAYSMITH, JULY 2022, TABLE 11
	THICKENED	**FLOW (gpd)**	**10,055**	**14,419**	**17,455**	**24,854**	ASSUMED PERFORMANCE OF RDT AT 95% CAPTURE AND 6% THICKENED SOLIDS.
		TOTAL SOLIDS (lb/d)	**5,035**	**7,220**	**8,740**	**12,445**	ASSUMED PERFORMANCE OF RDT AT 95% CAPTURE AND 6% THICKENED SOLIDS.
FOG		**FLOW (gpd)**	**2,030**	**6,349**	**3,516**	**10,995**	CKTP LIQUID HAULED WASTE STUDY TM; MURRAYSMITH, JULY 2022, TABLE 6
		TOTAL SOLIDS (lb/d)	**357**	**1,117**	**619**	**1,935**	CKTP LIQUID HAULED WASTE STUDY TM; MURRAYSMITH, JULY 2022, TABLE 7

8

FLOWS AND LOADS:

SCENARIO			2028		2042		NOTES
			AAF	MMF	AAF	MMF	
TWAS	THICKENED CKTP TWAS	FLOW (gpd)	6,454	8,063	8,663	10,712	PER WAS FLOWS AND LOADS PROJECTIONS. ASSUMED PERFORMANCE OF RDT AT 95% CAPTURE AND 6% THICKENED SOLIDS.
		TOTAL SOLIDS (lb/d)	3,232	4,038	4,338	5,364	PER WAS FLOWS AND LOADS PROJECTIONS. ASSUMED PERFORMANCE OF RDT AT 95% CAPTURE AND 6% THICKENED SOLIDS.
	HAULED FROM OTHER WWTPs	FLOW (gpd)	2,079	3,261	2,937	4,685	CKTP LIQUID HAULED WASTE STUDY TM; MURRAYSMITH, JULY 2022, TABLE 6
		TOTAL SOLIDS (lb/d)	933	1,463	1,318	2,102	CKTP LIQUID HAULED WASTE STUDY TM; MURRAYSMITH, JULY 2022, TABLE 7
THICKENED PRIMARY SLUDGE		FLOW (gpd)	11,573	13,281	15,747	17,644	CKTP LIQUID HAULED WASTE STUDY TM; MURRAYSMITH, JULY 2022, TABLE 7
		TOTAL SOLIDS (lb/d)	5,795	6,650	7,885	8,835	CKTP LIQUID HAULED WASTE STUDY TM; MURRAYSMITH, JULY 2022, TABLE 7
TOTAL LIQUID AND SOLID WASTE		FLOW (gpd)	32,192	45,373	48,318	68,890	
		TOTAL SOLIDS (lb/d)	15,352	20,488	22,900	30,681	

9

INFLUENT DIGESTER FLOWS:

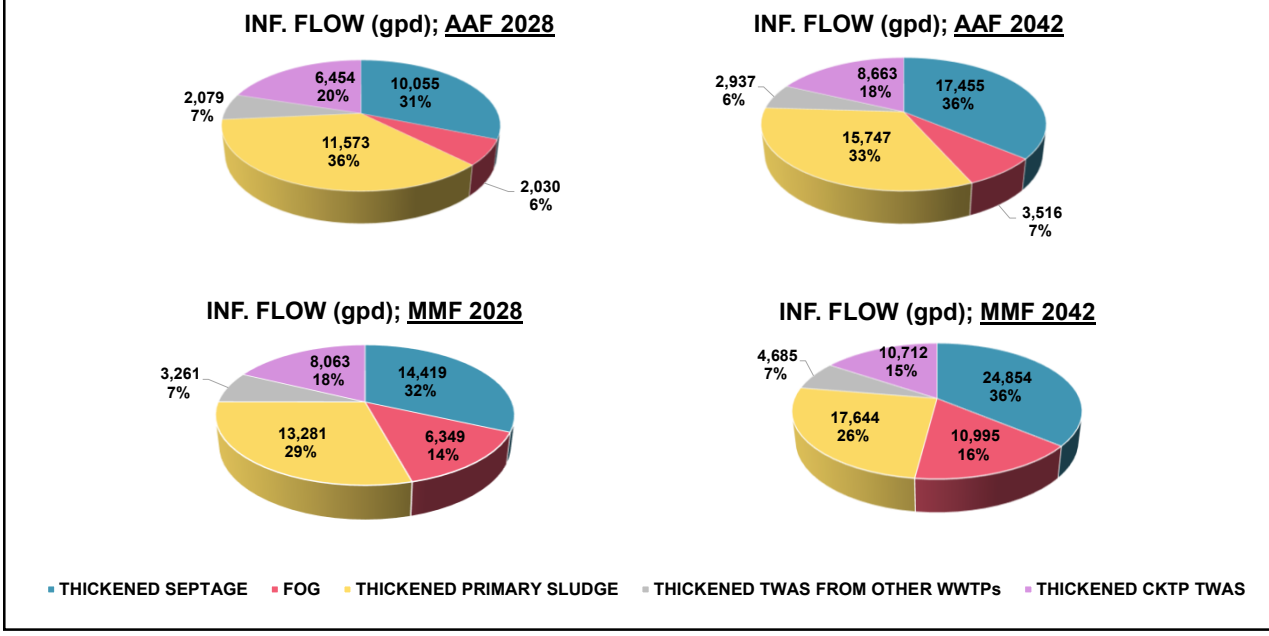

10

INFLUENT DIGESTER LOADS:

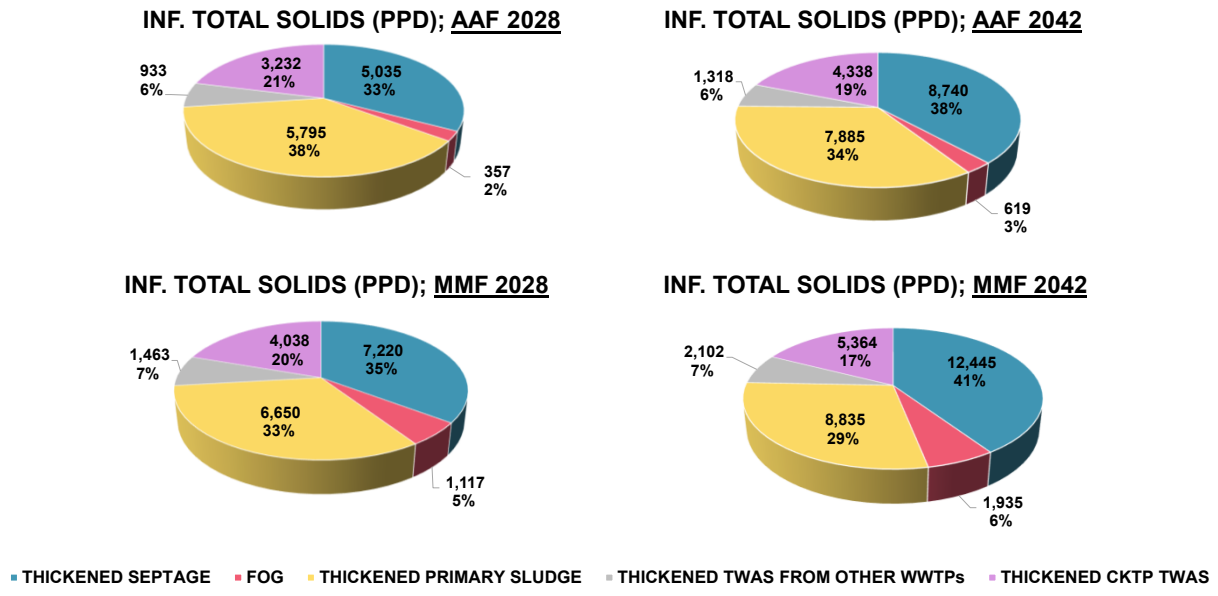

11

1 DIGESTION

1.1 TWO NEW DIGESTERS (0.65 MG EACH) VS. ONE NEW DIGESTER (1.3 MG)

1.2 SEPTAGE ONLY DIGESTER

1.3 DIGESTER INDIVIDUAL FEED CONTROL

1.4 DIGESTER CENTRALIZED FEED CONTROL

1.5 PARALLEL AND SERIES OPERATION

12

1 DIGESTION

1.1 TWO NEW DIGESTERS (0.65 MG EACH) VS. ONE NEW DIGESTER (1.3 MG)

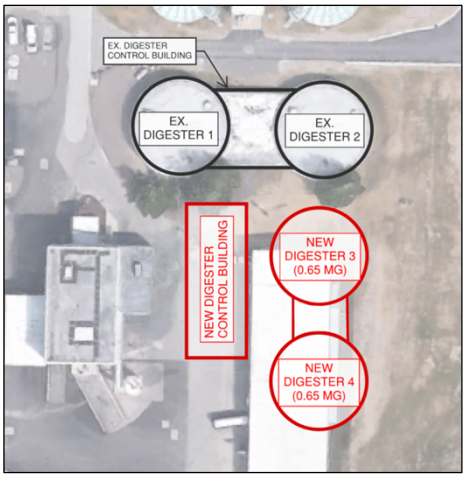

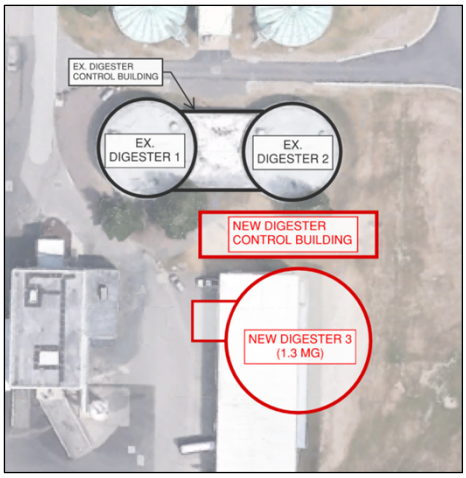

13

1 DIGESTION

1.1 TWO NEW DIGESTERS (0.65 MG EACH) VS. ONE NEW DIGESTER (1.3 MG)

SRT (in days); VOLATILE SOLIDS LOADING RATE, VSLR (lb/ft^3/day)

SCENARIO	2028		2042	
	AAF	MMF	AAF	MMF
2 NEW 0.65-MG DIGESTERS; FLOWS SPLITTED EQUALLY BETWEEN ALL FOUR DIGESTERS.	80.1 *0.038*	56.9 *0.051*	53.4 *0.057*	37.4 *0.076*
2 NEW 0.65-MG DIGESTERS; **1 DIGESTER OUT OF SERVICE**, FLOWS SPLITTED EQUALLY BETWEEN ALL THREE DIGESTERS.	**60.1** ***0.051***	**42.6** ***0.068***	**40.1** ***0.075***	**28.1** ***0.101***
1 NEW 1.3-MG DIGESTER; FLOWS SPLITTED EQUALLY BETWEEN ALL THREE DIGESTERS.	80.4 *0.038*	57.1 *0.050*	53.6 *0.056*	37.6 *0.076*
1 NEW 1.3-MG DIGESTER; **NEW 1.3-MG DIGESTER OUT OF SERVICE**, FLOWS SPLITTED EQUALLY BETWEEN EX. TWO 0.65-MG DIGESTERS.	**40.1** ***0.076***	**28.4** ***0.101***	**26.7** ***0.113***	**18.7** ***0.152***

14

1 DIGESTION

1.1 TWO NEW DIGESTERS (0.65 MG EACH) VS. ONE NEW DIGESTER (1.3 MG)

PROS	CONS
• BETTER REDUNDANCY AND SRT MAINTENANCE	• LARGER FOOTPRINT
• IMPROVED CONTROL AND FLEXIBILITY	• SOMEWHAT HIGHER COSTS
• GREATER CONSISTENCY ON EQUIPMENT SIZING	• INCREASED MAINTENANCE

15

1 DIGESTION

1.2 SEPTAGE ONLY DIGESTER

- ISOLATION OF MOST "PROBLEMATIC"STREAM
- HIGHLY VARIABLE (FLOW & LOAD)
- ALL DIGESTED MATERIALS STILL DEWATERED TOGETHER
- ABILITY TO FEED SEPTAGE TO OTHER TANKS
- ABILITY TO FEED ALL SOLID STREAMS TO SEPTAGE-ONLY DIGESTER
- ALKALINITY FEED FOR pH CONTROL (TEMPORARY OR PERMANENT ?)

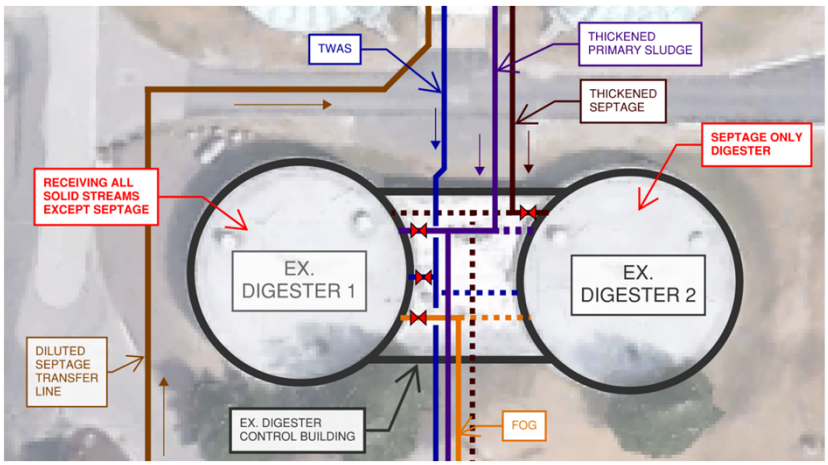

16

1 DIGESTION

1.2 SEPTAGE ONLY DIGESTER

SRT (in days); VOLATILE SOLIDS LOADING RATE, VSLR (lb/ft^3/day)

SCENARIO		2028		2042	
		AAF	MMF	AAF	MMF
1 0.65-MG SEPTAGE ONLY DIGESTER ALL OTHER FLOWS SPLITTED INTO ONE 0.65-MG DIGESTER + ONE 1.3-MG (OR TWO 0.65-MG) DIGESTER(S)	**SEPTAGE ONLY 0.65-MG DIGESTER**	**64.1** *0.050*	**44.7** *0.071*	**36.9** *0.086*	**25.9** *0.123*
	DIGESTERS RECEIVING ALL OTHER FLOWS	**87.9** *0.034*	**62.8** *0.044*	**63.0** *0.046*	**44.2** *0.060*
ALL FLOWS BLENDED ALL FLOWS SPLITTED EQUALLY INTO DIGESTERS		**80.4** *0.038*	**57.1** *0.050*	**53.6** *0.056*	**37.6** *0.076*

17

1 DIGESTION

1.2 SEPTAGE ONLY DIGESTER

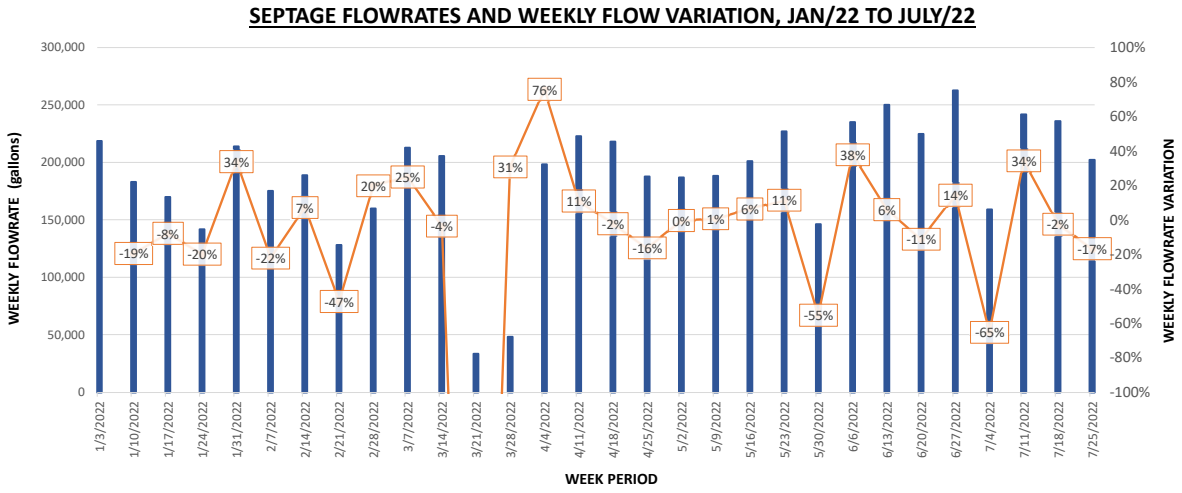

18

1 DIGESTION

1.2 SEPTAGE ONLY DIGESTER

PROS	CONS
• ALLOWS FOR ISOLATED CONTROL OF SEPTAGE TREATMENT	• SLIGHTLY REDUCES SRT FOR SEPTAGE MATERIAL
• ALLOWS FOR HIGH FLEXIBILITY, WITH SEPTAGE ONLY OR MIXING WITH OTHER FEEDS	• STILL REQUIRES CLASS B DUE TO MIXING WITH OTHER DIGESTER EFFLUENT DURING DEWATERING
	• NEED FOR ALKALINITY FEED FOR BACK-UP OPERATION
	• INCREASED VARIABILITY IN DEWATERING PERFORMANCE

19

1 DIGESTION

1.3 DIGESTER INDIVIDUAL FEED CONTROL

- VALVE AND FLOW METERS CONTROL INDIVIDUAL FEED STREAMS TO DIGESTERS
  - THICKENED PRIMARY SLUDGE
  - THICKENED WAS
  - SCUM (ALL DIGESTERS?)
  - THICKENED SEPTAGE
  - FOG
  - OTHERS (FOAM?)

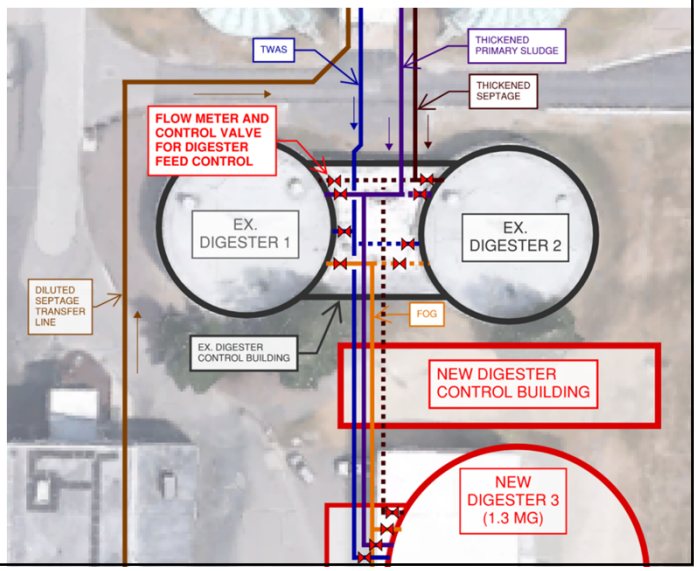

20

1 DIGESTION

1.3 DIGESTER INDIVIDUAL FEED CONTROL

PROS	CONS
• HIGH FLEXIBILITY FOR FEEDING EACH SOLIDS STREAM TO EACH DIGESTER	• MANY METERS AND MOTORIZED VALVES REQUIRED FOR CONTROL
• HIGH REDUNDANCY FOR FEED TYPE IF DIGESTERS ARE UNDER OR OVER PERFORMING	• MORE PUMPS (POSSIBLY) REQUIRED TO FEED DIGESTERS
• SIMPLE CONTROL FEATURES (FLOW METER AND CONTROL VALVES)	

21

1 DIGESTION

1.4 DIGESTER CENTRALIZED FEED CONTROL

- BLENDING TANK (NEW OR EXISTING*) FOR ALL WASTE STREAMS PRIOR TO DIGESTER FEEDING
- ONE CONTROL VALVE PER DIGESTER
- NO SEPTAGE ONLY DIGESTER
- MAINTAIN EXISTING THICKENED SLUDGE BLENDING TANK FOR TWAS
- WAS THICKENING BUILDING ORIGINALLY DESIGNED FOR SIMILAR APPROACH

*Assuming thickened primary sludge and septage, total average flows for 2028 are 32,000 gpd. Existing blend tank is a bit less than 15,000 gallons, so less than 1/2 day. For max month 2042 (highest flow), 69,000 gpd, with retention time of 4.5 hrs.

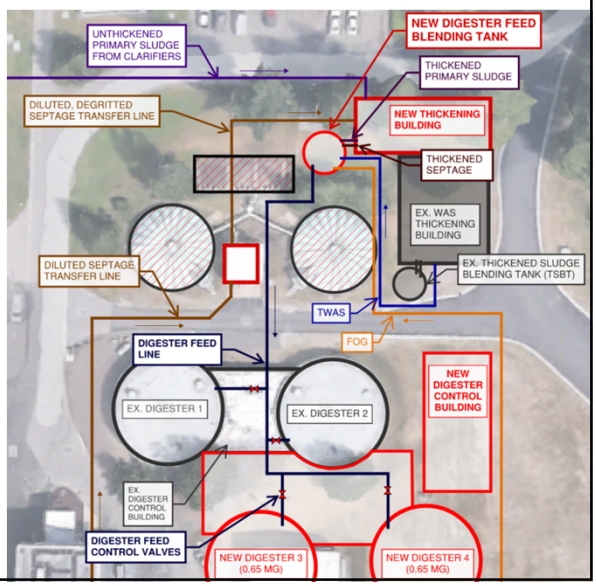

22

1 DIGESTION

1.4 DIGESTER CENTRALIZED FEED CONTROL

PROS	CONS
• SIMPLIFIED FEED TO EACH DIGESTERS; FEW FLOW METERS AND VALVES	• LESS CONTROL OF INDIVIDUAL MATERIALS
• EASIER TO DISTRIBUTE SIMILAR FEED CONSISTENTLY TO EACH TANK	• MORE DIFFICULT TO DO A SEPTAGE ONLY DIGESTER
	• BLENDING TANK TO BUILD AND OPERATE
	• TWAS COULD STILL BE A SEPARATE STREAM OR COMBINE INTO NEW COMMON BLENDING TANK

23

1 DIGESTION

1.5 PARALLEL AND SERIES OPERATION

PARALLEL:

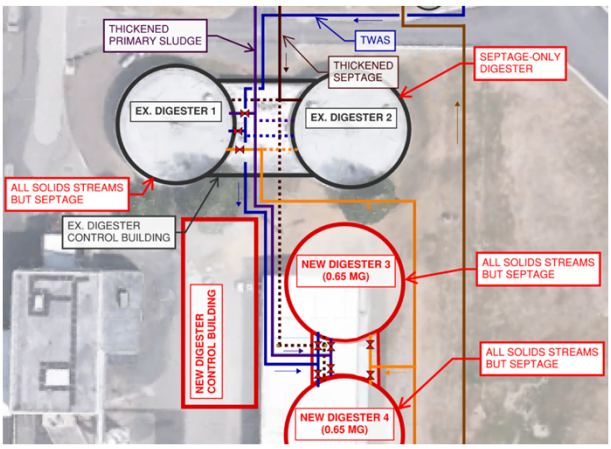

SERIES:

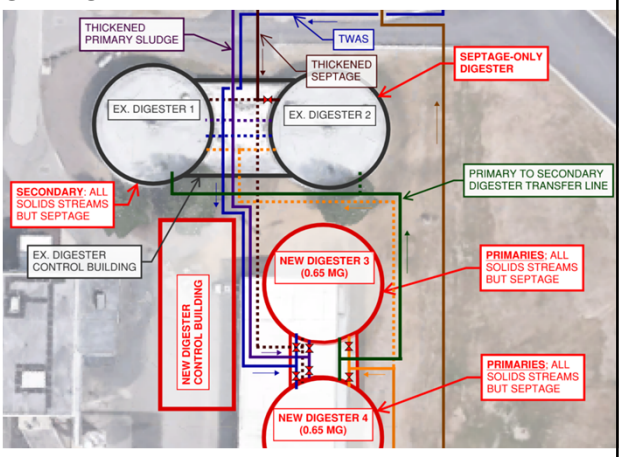

24

1 DIGESTION

1.5 PARALLEL AND SERIES OPERATION

SRT (in days); VOLATILE SOLIDS LOADING RATE, VSLR (lb/ft^3/day)

SCENARIO		2028		2042	
		AAF	MMF	AAF	MMF
PARALLEL OPERATION: 2 NEW 0.65-MG DIGESTERS; • 1 EX. DIGESTER FOR SEPTAGE ONLY • 3 DIGESTERS FOR ALL OTHER FLOWS	**SEPTAGE ONLY** **0.65-MG DIGESTER**	64.1 *0.050*	44.7 *0.071*	36.9 *0.086*	25.9 *0.123*
	DIGESTERS RECEIVING ALL OTHER FLOWS	87.4 *0.034*	62.5 *0.044*	62.7 *0.046*	43.9 *0.060*
SERIES OPERATION: 2 NEW 0.65-MG DIGESTERS; • 1 EX. DIGESTER FOR SEPTAGE ONLY • 2 DIGESTERS FOR PRIMARIES (ALL OTHER FLOWS BUT SEPTAGE) • 1 DIGESTER FOR SECONDARY	**SEPTAGE ONLY** **0.65-MG DIGESTER**	64.1 *0.050*	44.7 *0.071*	36.9 *0.086*	25.9 *0.123*
	PRIMARY DIGESTERS **RECEIVING ALL OTHER FLOWS**	58.3 *0.051*	41.7 *0.066*	41.8 *0.070*	29.3 *0.091*
	SECONDARY DIGESTER **RECEIVING ALL OTHER FLOWS**	29.1 *0.071*	20.8 *0.092*	20.9 *0.098*	14.6 *0.127*

25

1 DIGESTION

1.5 PARALLEL AND SERIES OPERATION

- FEED PUMPS – SENDING THICKENED WASTE TO THE DIGESTERS
- RECIRCULATION PUMPS – HEAT LOOP AND BLENDING POINT FOR FEED
- TRANSFER PUMPS – MOVE DIGESTER CONTENTS BETWEEN TANKS
- DEWATERING PUMPS – SEND DIGESTER CONTENTS TO DEWATERING

26

1 DIGESTION

1.5 PARALLEL AND IN-SERIES OPERATION

PROS	CONS
• ALLOWS FOR SIMPLE PARALLEL OPERATION, COMMON SRT TO ALL TANKS	• INCREASED PIPING COMPLEXITY
• ALLOWS FOR IN-SERIES TANK ARRANGEMENT TO IMPROVE KINETICS AND VSR	• IN-SERIES OPERATION REQUIRES HIGHER LOADING ON PRIMARY DIGESTERS (1st DIGESTION STAGE)
• HIGH FLEXIBILITY IF TRANSFER PUMPS ARE PROVIDED, ALLOWING SOLIDS TO BE TRANSFERRED BETWEEN ANY TANK	• INCREASED (POTENTIALLY) NUMBER OF ACTIVE PUMPS

- RELATED ISSUE: NUMBER OF PUMPING SYSTEMS AND METHOD TO FEED TO CENTRIGUE (LOOP OR DIRECT)

27

1 DIGESTION

RECAP:

1.1 TWO NEW DIGESTERS (0.65 MG EACH) VS. ONE NEW DIGESTER (1.3 MG)

- MAINTENANCE OF HRT WHEN ONE DIGESTER IS OFFLINE

1.2 SEPTAGE ONLY DIGESTER

- LOWER HRT FOR SEPTAGE ONLY DIGESTER

1.3 DIGESTER INDIVIDUAL FEED CONTROL

- MORE VALVES AND FLOWRATES, MORE FLEXIBILITY

1.4 DIGESTER CENTRALIZED FEED CONTROL

- SIMPLIFIED FEED TO DIGESTERS, LARGER FOOTPRINT REQUIRED, NO SEPARATE SEPTAGE

1.5 PARALLEL AND SERIES OPERATION

- SERIES OPERATION IMPROVES KINETICS AND SRT, MORE PIPING COMPLEXITY
- NUMBER OF PUMPING SYSTEMS AND DIRECT FEED TO CENTRIFUGE OR MAINTAIN LOOP SYSTEM

28

2 THICKENING

2.1 TWO VS. THREE THICKENING UNITS IN NEW BUILDING

2.2 THICKENING BUILDING LOCATED NORTH VS. SOUTH

2.3 RECUPERATIVE THICKENING VS. STANDARD THICKENING BUILDING

29

2 THICKENING

2.1 TWO VS. THREE THICKENING UNITS IN NEW BUILDING

- THICKEN PRIMARY SLUDGE AND SEPTAGE SEPARATELY, **OR** INTENT TO THICKEN TOGETHER?
- THICKEN SEPTAGE BY ITSELF MAY BE CHALLENGING
- REDUNDANCY OF THIRD UNIT FOR TWAS

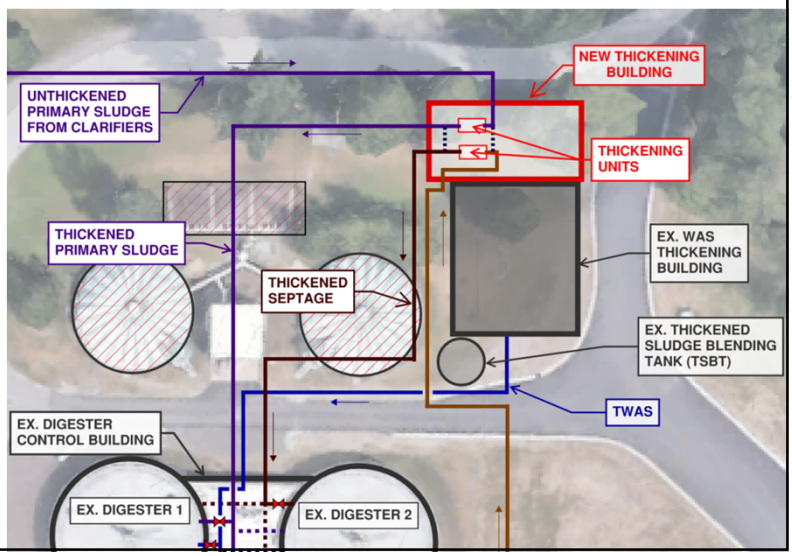

30

2 THICKENING

2.1 TWO THICKENING UNITS IN NEW BUILDING

PROS	CONS
• SIMPLE ARRANGEMENT OF ONE UNIT FOR SEPTAGE, ONE FOR PRIMARY SLUDGE	• LACK OF REDUNDANCY FOR TWAS (PER FACILITY PLAN)
• SMALLER BUILDING REQUIRED	• SEPTAGE REDUNDANCY IS ALTERNATIVE FEED TO HEADWORKS
• CAN USE EITHER UNIT FOR REDUNDANCY OF PRIMARY SLUDGE THICKENING	

- RELATED ISSUE: ONE OTHER FACTOR RELATED TO SEPTAGE HANDLING THAT MAY AFFECT OUR DECISION HERE

31

2 THICKENING

2.2 THICKENING BUILDING LOCATED NORTH VS. SOUTH

THICKENING BUILDING LOCATED NORTH:

- ALL THICKENING FACILITIES TOGETHER AT THE NORTH SIDE
- EASIER TRUCK ACCESS
- COULD ALLOW FOR TWAS THICKENING REDUNDANCY

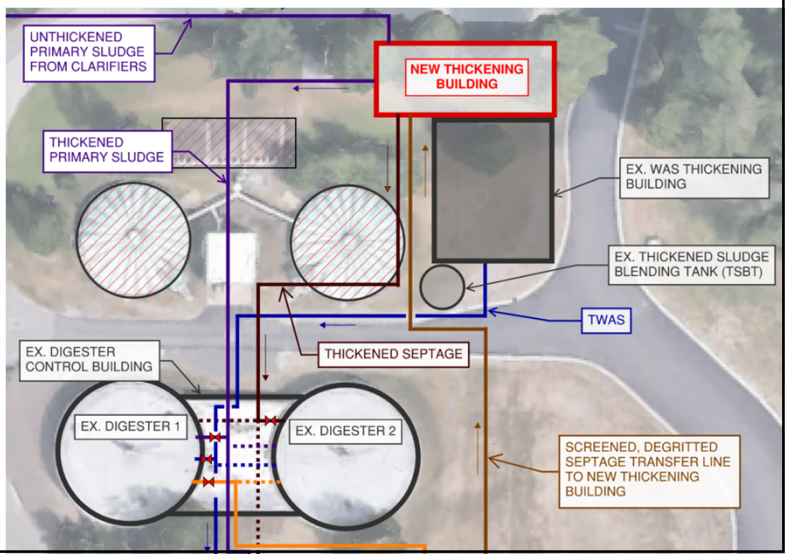

32

2 THICKENING

2.2 THICKENING BUILDING LOCATED NORTH VS. SOUTH

THICKENING BUILDING LOCATED NORTH:

PROS	CONS
• LOCATED NEAR CURRENT THICKENING BUILDING	• FAR FROM SEPTAGE HANDLING
• ACCESS NEAR FRONT OF PLANT	• LESS DIRECT PATHWAY FROM WASTE SOURCES (PRIMARY SLUDGE, SEPTAGE) TO THICKENING AND TO DIGESTERS
• AVAILABLE SPACE (LIMITED)	

33

2 THICKENING

2.2 THICKENING BUILDING LOCATED NORTH VS. SOUTH

THICKENING BUILDING LOCATED SOUTH:

- MORE CENTRALIZED LOCATION TO THICKEN PRIMARY SLUDGE AND SEPTAGE

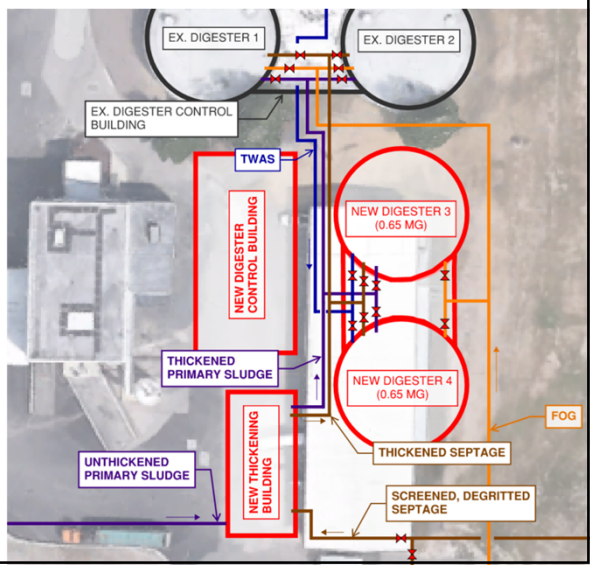

34

2 THICKENING

2.2 THICKENING BUILDING LOCATED NORTH VS. SOUTH

THICKENING BUILDING LOCATED SOUTH:

PROS	CONS
• MORE CENTRALIZED LOCATION TO RECEIVE SEPTAGE/PRIMARY SLUDGE	• TIGHTER ACCESS (DEPENDS ON O&M BUILDING)
• EASIER TO SEQUENCE CONSTRUCTION	• REQUIRES COORDINATION WITH PROPOSED O&M BUILDING LOCATION
• MORE AVAILABLE SPACE	• CANNOT USE BUILDING FOR TWAS REDUNDANCY

35

2 THICKENING

2.3 RECUPERATIVE THICKENING VS. STANDARD THICKENING BUILDING

- THICKEN DIGESTERS DIRECTLY TO CONTROL SOLIDS CONTENT
- TWO OPTIONS:
  - (2.3) FEED UNTHICKENED PRIMARY AND SEPTAGE DIRECTLY TO DIGESTERS – NO EXTRA THICKENING BUILDING
  - (2.3A) USE RECUPERATIVE THICKENING TO STABILIZE AND REDUCE RISK ON SEPTAGE DIGESTERS – KEEP THICKENING BUILDING
- HIGHER INFLUENT LIQUID FLOW TO DIGESTERS INCREASES HEAT DEMAND TO DIGESTER BOILERS.
  - HEATING ADDITIONAL FLOW OF 120,000 GPD FROM 60F TO 98F COULD COST AT LEAST $300,000 PER YEAR, ONLY CONSIDERING DIESEL COSTS FOR BOILERS.

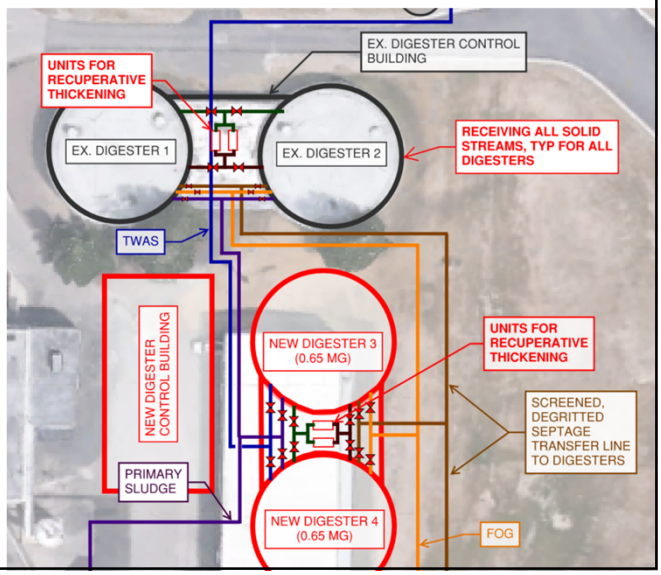

36

2 THICKENING

2.3 RECUPERATIVE THICKENING VS. STANDARD THICKENING BUILDING

PROS	CONS
• AVOIDS EXTENDED HANDLING OF SEPTAGE	• NEED 4 UNITS (TWO FOR EACH PAIR OF DIGESTERS) WITH CROSSOVER REDUNDANCY
• CAN BE USED AS SUBSTITUTE FOR PRIMARY SLUDGE THICKENING	• SOMEWHAT HIGHER EQUIPMENT COST
• IMPROVED CONTROL FOR STABLE SOLID FLOWS	• POLYMER IN SEPARATE ROOM IN DIGESTER CONTROL BUILDING
• REDUCED THICKENED SOLIDS PUMPING	• NO ADDITIONAL THICKENING UNIT FOR TWAS (UNLESS WE FIT INTO EXISTING BUILDING)
• BETTER USE OF EXISTING BUILDING SPACE (LESS BUILDING COST)	• NOT WIDELY USED
• SOME DILUTION OF RECYCLE NITROGEN LOADS (TAKE SOME OF THE LOAD FROM DEWATERING)	• INCREASED HEAT DEMAND FOR DIGESTERS BOILERS RESULTING IN INCREASED OPERATION COSTS
• CAN SERVE AS REDUNDANCY FOR TWAS THICKENING	• CHALLENGING TO CONTROL

37

2 THICKENING

2.3A SEPTAGE-ONLY DIGESTER RECUPERATIVE THICKENING

- TRADITIONAL RECUPERATIVE THICKENING: SEPTAGE-ONLY DIGESTER WOULD STILL BE FED THICKENED SEPTAGE.
  - RECUPERATIVE THICKENING UNIT WOULD BE INTENDED FOR ADDITIONAL THICKENING OF SEPTAGE DIGESTER
- OPTION TO INSTALL RDT ON OLD DIGESTERS ASSUMING ONE IS USED FOR SEPTAGE ONLY
- ADDS FLEXIBILITY: RDT UNIT COULD BE USED AS REDUNDANCY IF SEPTAGE THICKENING IS WEAK OR PROBLEMATIC

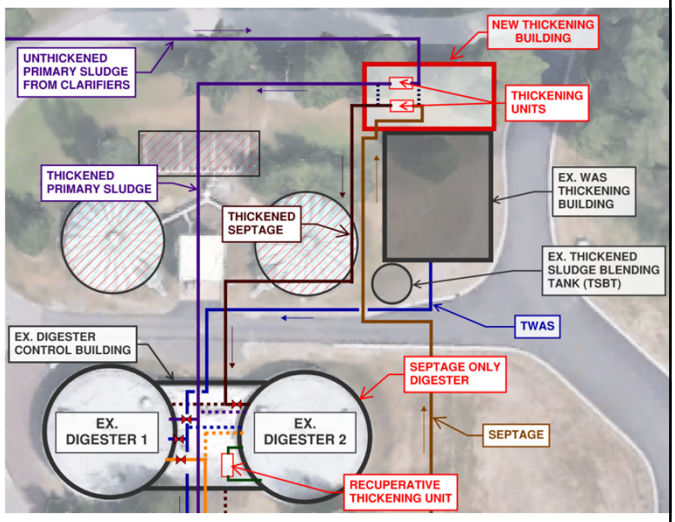

38

2 THICKENING

2.3A SEPTAGE-ONLY DIGESTER RECUPERATIVE THICKENING

PROS	CONS
• INCREASED SOLIDS RETENTION TIME FOR SEPTAGE	• PUMPING REQUIRED IF INSTALLED ON NEW THICKENING BUILDING
• NO ADDITIONAL HEAT DEMAND	• ADDED PIPING COMPLEXITY AND ADDITIONAL PUMPS
• INCREASED CONTROL FOR STABLE SEPTAGE FEED SOLIDS	
• NO ADDITIONAL BUILDING SPACE REQUIRED IF INSTALLED AT OLD DIGESTER CONTROL BLDG	

- IS THIS LEVEL OF SAFETY FACTOR APPROPRIATE GIVEN FEED STRATEGY, NUMBER OF DIGESTERS, ALKALINITY PROTECTION, ETC.?

39

2 THICKENING

RECAP:

2.1 TWO VS. THREE THICKENING UNITS IN NEW BUILDING

- TWO UNITS REQUIRE SMALLER BUILDING; OTHER OPTIONS NEEDED FOR TWAS REDUNDANCY

2.2 THICKENING BUILDING LOCATED NORTH VS. SOUTH

- LOCATED NORTH NEAR EXISTING THICKENING FACILTIES, OR SOUTH NEAR WASTE SOURCES

2.3 RECUPERATIVE THICKENING VS. STANDARD THICKENING BUILDING

- RECUPERATIVE THICKENING OPTION FOR SEPTAGE DIGESTER PROTECTION

40

3 SEPTAGE/FOG

3.1 SEPTAGE TREATMENT CENTRALIZED VS. DISPERSED (CURRENT)

3.2 SEPTAGE EQUALIZATION BASIN (50,000+ GALLONS)

3.3 SEPTAGE FEED TO HEADWOKS

41

3 SEPTAGE/FOG

3.1 SEPTAGE TREATMENT CENTRALIZED VS. DISPERSED (CURRENT)

CENTRALIZED:

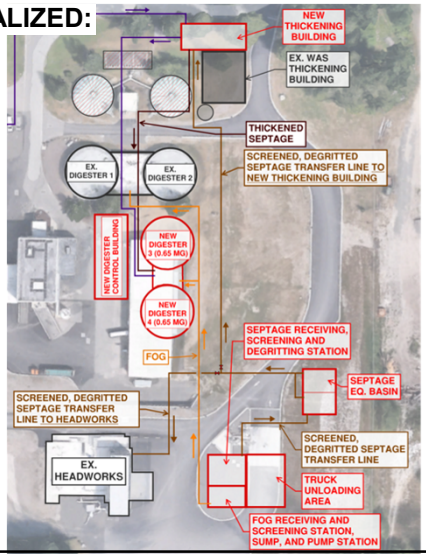

DISPERSED:

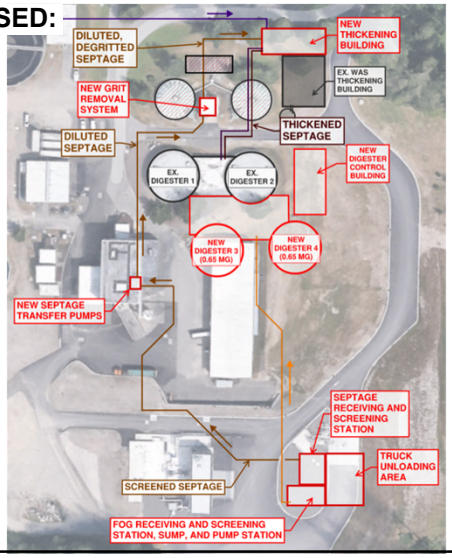

42

3 SEPTAGE/FOG

3.1 SEPTAGE TREATMENT CENTRALIZED VS. DISPERSED (CURRENT)

PROS	CONS
• KEEPS ALL EQUIPMENT FOCUSED IN ONE LOCATION	• DOES NOT USE EXISTING INFRASTRUCTURE
• SINGLE POINT OF PUMPING AND MONITORING	
• DIRECT ROUTING TO HEADWORKS, THICKENING BUILDING, OR DIGESTERS	
• EASIER TO SEQUENCE CONSTRUCTION	

43

3 SEPTAGE/FOG

3.2 SEPTAGE EQUALIZATION BASIN (50,000+ GALLONS)

- EQUALIZATION FOR CONTROL, MONITORING AND CONSISTENT FEED TO THICKENING AND DIGESTERS
- SIZING SHOULD BE AT LEAST 50,000 GAL; UP TO 200,000 GAL+ DEPENDING ON DILUTION FACTOR

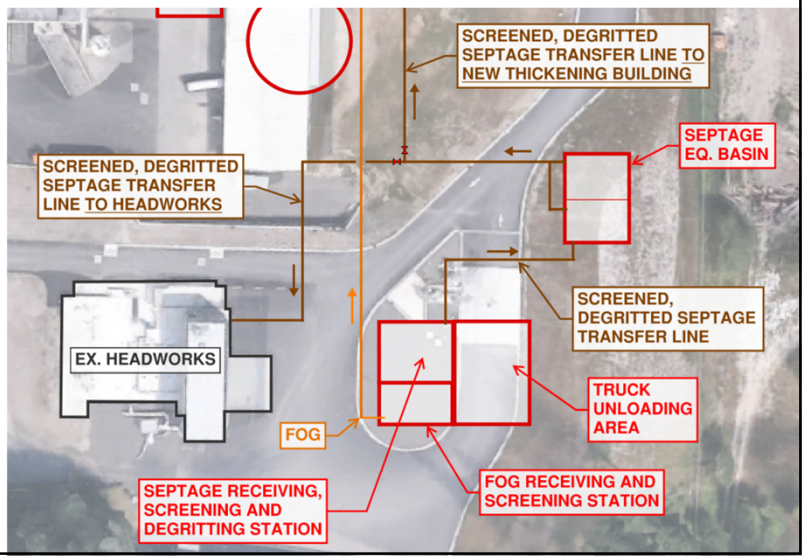

44

3 SEPTAGE/FOG

3.2 SEPTAGE EQUALIZATION BASIN (50,000+ GALLONS)

PROS	CONS
• BUFFERING OF SEPTAGE 'HOT LOADS'	• COST OF BURIED TANK
• BETTER SAMPLING CAPABILITY	• ADDITIONAL EQUIPMENT FOR MIXING
• GOOD LOCATION FOR ALKALINITY ADDITION AND pH MONITORING	
• SIMPLE PUMPING AND POINT OF DILUTION (IF NEEDED)	
• DOWNSTREAM STABILITY FOR THICKENING AND DIGESTER FEED	

45

3 SEPTAGE/FOG

3.3 SEPTAGE FEED TO HEADWOKS

- CONNECTION TO HEADWORKS TO PROVIDE SECONDARY OFFLOAD LOCATION FOR SEPTAGE
- SOLIDS WOULD BE INCORPORATED INTO PRIMARIES AND SOLUBLE CARBON USED IN BNR PROCESS
- BACKUP, REDUNDANCY, AND DIGESTER PROTECTION
- INCREASE PRIMARY SLUDGE PUMPING DEMAND

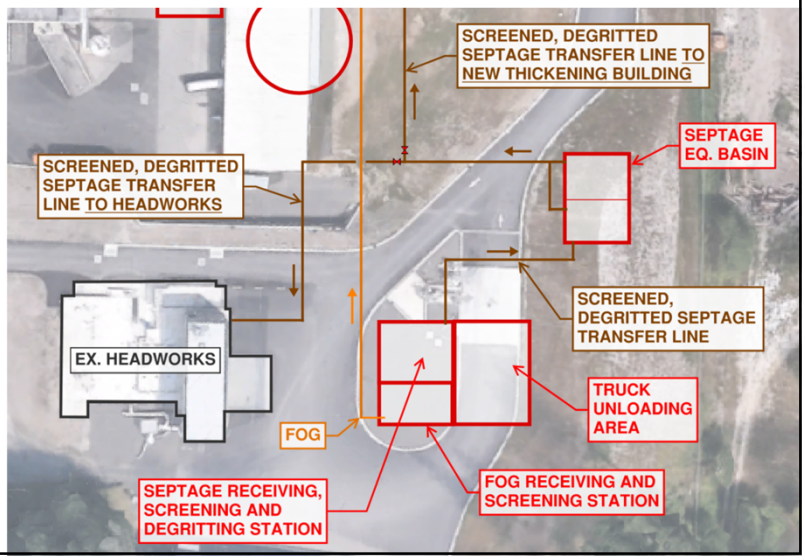

46

3 SEPTAGE/FOG

3.3 SEPTAGE FEED TO HEADWOKS

PROS	CONS
• SIMPLE PIPING CONNECTION (HEADWORKS NEARBY SEPTAGE RECEIVING STATION)	• LESS LOADING TO DIGESTER (AND SOME DEGREE OF GAS PRODUCTION)
• PROVIDES REDUNDANCY TO SEPTAGE GRIT REMOVAL AND SCREENING	• SEPTAGE ONLY DIGESTER NOT POSSIBLE
• FEED SOLIDS WILL BE COMBINED WITH PRIMARY SOLIDS AND SOLUBLE CARBON COULD BE USED IN AERATION BASINS	
• SEPTAGE THICKENING NOT NEEDED (REDUNDANCY FOR SEPTAGE THICKENING SYSTEM)	

47

3 SEPTAGE/FOG

RECAP:

3.1 SEPTAGE TREATMENT CENTRALIZED VS. DISPERSED (CURRENT)

- CENTRALIZED SEPTAGE TREATMENT SIMPLIFIES PUMPING AND MONITORING; DOES NOT USE EXISTING INFRASTRUCTURE

3.2 SEPTAGE EQUALIZATION BASIN (50,000+ GALLONS)

- ALLOWS FOR BUFFERING OF SEPTAGE LOADS, AND FOR CONSISTENT SEPTAGE FEEDING INTO THICKENING AND DIGESTERS; ADDITIONAL FOOTPRINT REQUIRED

3.3 SEPTAGE FEED TO HEADWOKS

- SIMPLE CONNECTION, PROVIDES REDUNDANCY TO SEPTAGE HANDLING SYSTEMS
- DOES THIS CHANGE OUR THOUGHTS ON THICKENING BUILDING

48

Summary Discussion

REVIEW SITE PLAN SCHEMATIC 1

- **FOG HANDLING:** SCREEN AND OFFLOAD NEAR SEPTAGE, PUMP DIRECTLY TO DIGESTERS (HOT WATER/HEATED LINES)

- **SEPTAGE HANDLING: DISPERSED**
SCREEN AND OFFLOAD, FLOW TO CURRENT PUMP STATION (NEW PUMPS), FLOW TO DEGRITTING NEAR CURRENT BUILDING, FEED TO THICKENING BUILDING

- **DIGESTION APPROACH:**
  - **# OF DIGESTERS:** 1 NEW LARGE DIGESTER (1.3 MG)
  - **SEPTAGE TREATMENT STRATEGY:** NO OPTION FOR SEPTAGE ONLY DIGESTER; WASTE STREAMS MIXED UPSTREAM AND SPLITTED EVENLY BETWEEN DIGESTERS
  - **DIGESTER FEEDING STRATEGY:** NEW BLENDING TANK FOR PRIMARY SLUDGE, SEPTAGE, FOG AND SCUM. KEEP EXISTING BLENDING TANK FOR TWAS, AND MIX WASTE STREAMS INLINE AT DIGESTER FEEDING LINE
  - **OPERATIONAL ARRANGEMENT:** ALL DIGESTERS OPERATED IN PARALLEL

- **THICKENING APPROACH:**
  - **THICKENING STRATEGY:** THICKEN SEPTAGE ON SEPARATE UNIT IN PARALLEL WITH PRIMARY SLUDGE, WITH THIRD REDUNDANCY UNIT
  - **THICKENING LOCATION:** NORTH, NEAR WAS THICKENING BUILDING

49

Summary Discussion

REVIEW SITE PLAN SCHEMATIC 2

- **FOG HANDLING:** SCREEN AND OFFLOAD NEAR SEPTAGE, PUMP DIRECTLY TO DIGESTERS (HOT WATER/HEATED LINES)

- **SEPTAGE HANDLING: CENTRALIZED**
OFFLOAD, SCREEN, DEGRIT, MONITOR, EQ ALL IN ONE LOCATION. FEED TO MULTIPLE SPOTS, INCLUDING HEADWORKS, THICKENING, AND DIRECT TO DIGESTER.

- **DIGESTION APPROACH:**
  - **# OF DIGESTERS:** 2 NEW DIGESTERS, SAME SIZE AS EXISTING (0.65 MG)
  - **SEPTAGE TREATMENT STRATEGY:** SEPTAGE ONLY DIGESTER; INCLUDE ABILITY TO BLEND WITH OTHER TANKS; INCLUDE ALKALINITY FEED
  - **DIGESTER FEEDING STRATEGY:** VALVE/FLOW METER CONTROL OF INDIVIDUAL FEED STREAMS: PRIMARY SLUDGE, TWAS, SEPTAGE, FOG, SCUM
  - **OPERATIONAL ARRANGEMENT:** PARALLEL + ABILITY TO OPERATE IN SERIES
    - 4 DIGESTERS: 2 PRIM. + 1 SEC. OR 2 PRIM. + 2 SEC.
    - 3 DIGESTERS: 1 PRIM. (1.3 MG) + 1 OR 2 SECONDARY

- **THICKENING APPROACH:**
  - **THICKENING STRATEGY:** THICKEN SEPTAGE ON SEPARATE UNIT IN PARALLEL WITH PRIMARY SLUDGE, WITH THIRD REDUNDANCY UNIT (MAY NEED BACKUP FOR WAS IN EXISTIGN WAS BUILDING)
  - **THICKENING LOCATION:** SOUTH, NEAR NEW DIGESTERS

50

Summary Decisions

DIGESTION

- NUMBER OF TANKS
- FEED STRATEGY
  - VALVES, BLEND TANK
  - PARALLEL, SERIES
- SEPTAGE OPTION
  - ALKALINITY BACKUP

THICKENING

- THICKENING STRATEGY
  - RECUPERATIVE
  - SEPTAGE AND PRIMARY
  - TWAS BACKUP
- THICKENING BUILDING (IF USED)
  - # OF UNITS
  - LOCATION

SEPTAGE AND FOG

- SEPTAGE TREATMENT
  - CENTRALIZED
  - DISPERSED
- EQUALIZATION AND MONITORING
  - ALKALINITY BACKUP
  - LEVEL OF DILUTION
- REDUNDANCY
  - BACKUP FEED TO HEADWORKS (SEPTAGE ONLY)
  - EQUIPMENT REDUNDANCY

51

HDR

© HDR, all rights reserved.

52

4 InPlant Pump Station (if time allows)

General Design Criteria (Confirm):

- New station constructed next to existing
- Current is overwhelmed during septage washdown – what size would be preferred?
- New valve vault
- New pumps with VFDs
- Decommission and demo existing station and vault

53

5 Odor Control (if time allows)

General Design Criteria (Confirm):

- Considering two odor controls systems:
  - Serve new thickening building
  - Serve Septage and FOG tanks/equipment
- Two technology options
  - Inorganic media biofilter
  - Carbon
- Flows
  - Assuming only for equipment connections in new thickening building (no odor control for overall airflow)
  - Minimum air exchanges to keep negative pressure

54

6 Biogas Storage and Boilers (if time allows)

General Design Criteria (Confirm):

- Cover technologies will include concepts for more/less gas storage
  - Membrane covers
  - Separate storage sphere
  - Mostly for cogen unit?
- Boilers
  - Current plan would be new diesel units
  - Options for natural gas or future biogas treatment to serve boilers?

55

Summary Discussion

Review Site Plan Schematic 3

- FOG HANDLING: SCREEN AND OFFLOAD NEAR SEPTAGE, PUMP DIRECTLY TO DIGESTERS (HOT WATER/HEATED LINES)

- SEPTAGE HANDLING: CENTRALIZED
OFFLOAD, SCREEN, DEGRIT, MONITOR, EQ ALL IN ONE LOCATION. FEED TO MULTIPLE SPOTS, INCLUDING HEADWORKS AND DIRECT TO DIGESTER.

- DIGESTION APPROACH:
- **# OF DIGESTERS:** 2 NEW DIGESTERS, SAME SIZE AS EXISTING (0.65 MG)
- **SEPTAGE TREATMENT STRATEGY:** SEPTAGE ONLY DIGESTER; INCLUDE ABILITY TO BLEND WITH OTHER TANKS; INCLUDE ALKALINITY FEED
- **DIGESTER FEEDING STRATEGY:** VALVE/FLOW METER CONTROL OF INDIVIDUAL FEED STREAMS: PRIMARY SLUDGE, TWAS, SEPTAGE, FOG, SCUM
- **OPERATIONAL ARRANGEMENT:** ALL DIGESTERS OPERATED IN PARALLEL

- THICKENING APPROACH:
- **THICKENING STRATEGY:**
  - RECUPERATIVE THICKENING: SEND SEPTAGE AND PRIMARY SLUDGE STRAIGHT TO DIGESTERS
  - RECUPERATIVE THICKENING UNIT AT DIGESTER BUILDING
- **THICKENING LOCATION:** SOUTH, NEAR DIGESTERS

56

Best Practices *(Content)*

You are free to choose from and use any combination of slide layouts to fit your needs. Many options are available in the master page layouts, which can be accessed on the Home tab > Layout.

Use Arial font.

- When possible, use Arial when dealing with numbers instead of Arial Narrow for readability.
- 12 point is the smallest size you should use for readability unless dealing with a footnote.

Remember these best practices to capitalize on the power of strong visuals:

- Use visuals/graphics to communicate your main thoughts or big ideas.
- Use bullets only when absolutely necessary and limit to no more than four to five bullets with no more than six words per bullet on a slide. Consider using bullet points in your notes and let the visuals/graphics support the message of your slide.
- Avoid using all-text slides if possible. Use visuals/graphics and rely on your expertise to engage your audience, support your message and aid in recall.

Spell check.

Best Practices *(Images & Graphics)*

Compress your images.

- If it does not compromise quality, save images at 150 dpi at 100% and/or compress them before uploading to keep file size down.

Do not insert photos from Google or other outside sources.

- Please use Watson or Genie as much as possible. Link(s) are in the Connects Toolbox on the portal home page.
- Content from external sources such as photographs, videos, graphics, icons and stock art, et al., is typically protected by copyright. Please do not use external content without obtaining permission from the owner to use.

Graphics/Videos

- Make your presentation more graphically focused than text focused.

Keep graphics simple.

- Avoid using Smart Objects that show shadowing, embossing and special effects. Use Arial Narrow if you need to make the text fit.

When inserting videos:

- Please use WMV format. If you need help, the CMS/AMS graphics teams can convert the video files to a WMV format for you.

The CMS/AMS graphics teams are available to assist with graphics/visual development. Open a Graphics Request for assistance.

Resources:

PPT Tips

Microsoft Office PowerPoint Help Center

Sample Presentations

57

Best Practices *(Charts & Graphs)*

Keep your data charts simple.

- Avoid using Smart Objects that show shadowing, embossing and special effects. Use Arial Narrow if you need to make the text fit.
- Remove unnecessary data points.

Break the information into small, digestible chunks before making your chart.

- Limit the charts and graphs to 5 rows/columns of data max. If you need more rows/columns of data, split between slides by sections *(years, phases, etc.)*.
- Flow charts and timeline data should be kept simple and have 3-4 max milestones per slide. Split the milestones into multiple slides to make the data more digestible.

Limit the number of colors in your slide so it creates more hierarchy and focus.

- Do not use primary red and primary blue together. Try using primary red + primary gray together or primary blue + primary gray together. Refer to Brand Guidelines for more guidance.

Don't overload your slide with data.

- Watching a PowerPoint presentation and going through an Excel file on your own are two different mindsets. The conclusion/evidence/reasoning of the chart needs to be quickly grasped by the audience.
- Start with your message first and then the data to support your message. Your audience will find your message more effective and memorable.

Best Practices for Reusing Slides

Copy and Paste Method

1. You can copy and paste slides from one presentation into another. Once you have copied the slide you want to transfer, put your cursor between the thumbnails where you want to insert the slide. Right click and select **Paste Option** > **Use Destination Theme**.

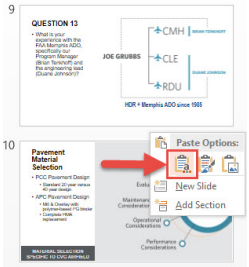

2. You will need to apply a slide layout from your existing PowerPoint slide master to the inserted slide. (**Home** tab > **Layout** and click on the layout you want applied.)
3. Once this is completed, you can go to your master slide layouts (**View** tab > **Slide Master**) and delete the layout that came in. This keeps the master layouts clean and helps you avoid accidentally using an old master.
4. **There will still be cleanup needed.**

Learn More >

58

Best Practices When Presenting Over Webex

Internet bandwidth from in/out of an office can delay animations, transitions and videos when presenting your show. Below are some tips and links to optimize your presentation over Webex for PowerPoint 2013, 2016 and Office 365:

- If possible, present your show from your desktop and not from the server.
- Close unused applications when presenting to avoid applications using bandwidth and prevent pop-up notifications.
- How to optimize animations and video:
  - File sharing an animated PowerPoint
  - Sharing motion and video content

For other questions and the most up-to-date Webex updates, visit Cisco Webex Help Center.

59

Icons

The CMS/AMS graphics teams are available to assist with icon development for your presentation. Open a Graphics Request for assistance.

60

61

62

01 Sample Agenda Slide Built as a Table
02 Section Name Here That Is Two Lines Long
03 Section Name Here
04 Section Name Here
05 Section Name Here That Is Two Lines Long
06 Section Name Here
07 Section Name Here

63

64

65

66

67

68

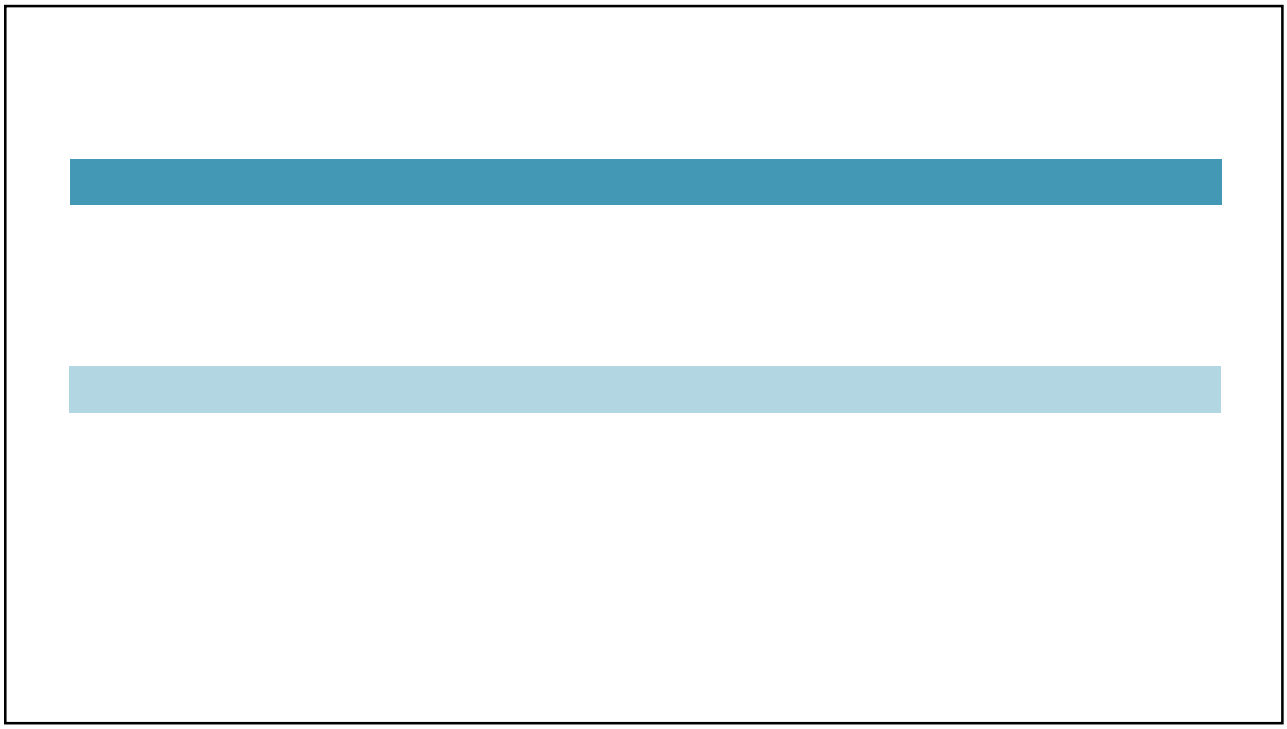

69

Appendix B. Digester and Thickening Building Workshop Summary

ALTERNATIVE 1: HYBRID OPTION; INDIVIDUAL CONTROL FOR BLENDED SLUDGES

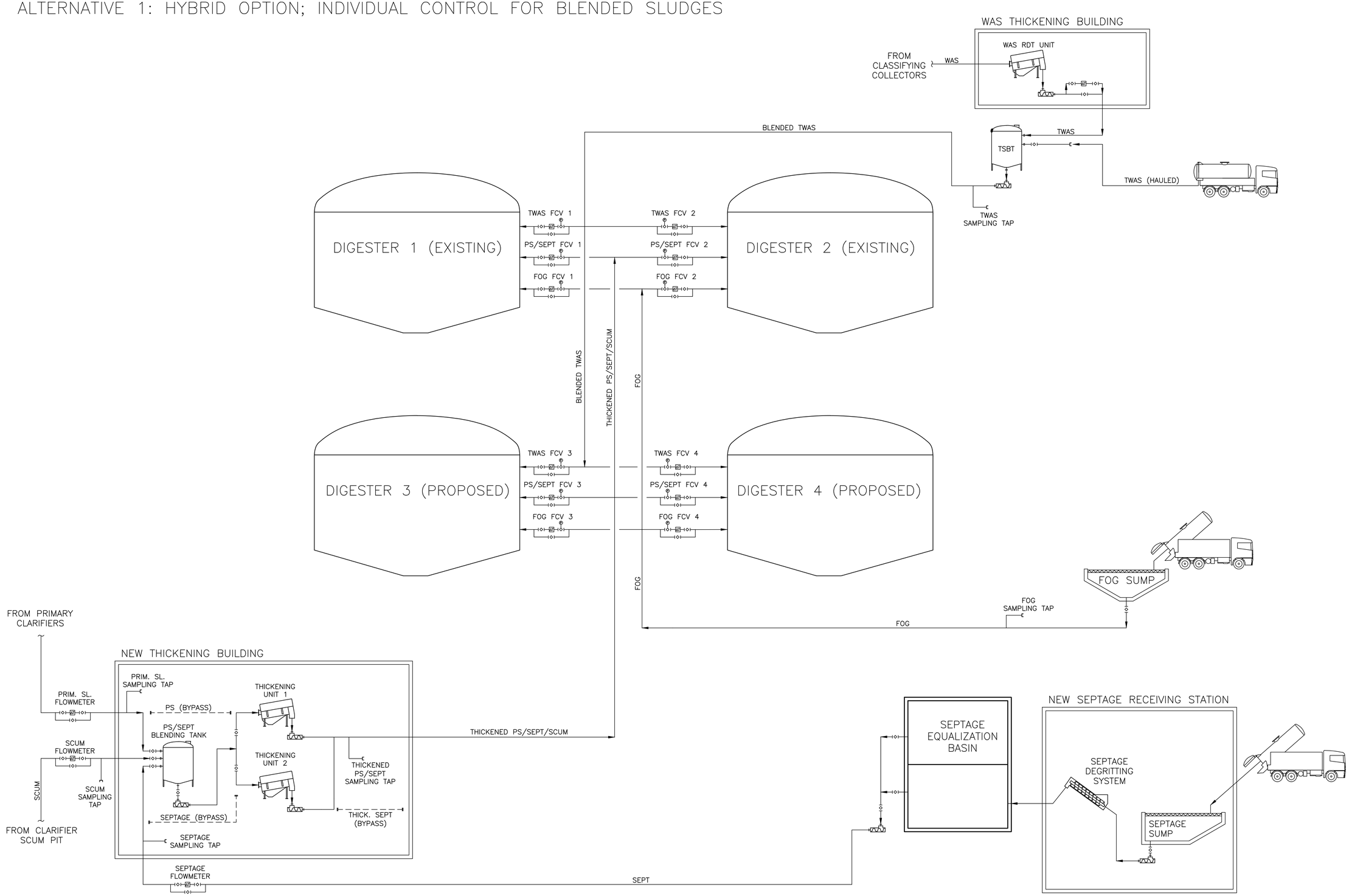

HDR ENGINEERING, INC.
929 108th Ave NE
Suite 1300
Bellevue, WA 98004

0 1/2 1
IF THIS BAR DOES NOT MEASURE 1" THEN DRAWING IS NOT TO FULL SCALE

PROJECT NO.

EXHIBIT

ALTERNATIVE 2: INDIVIDUAL DIGESTER FEED FOR EACH SOLID STREAM

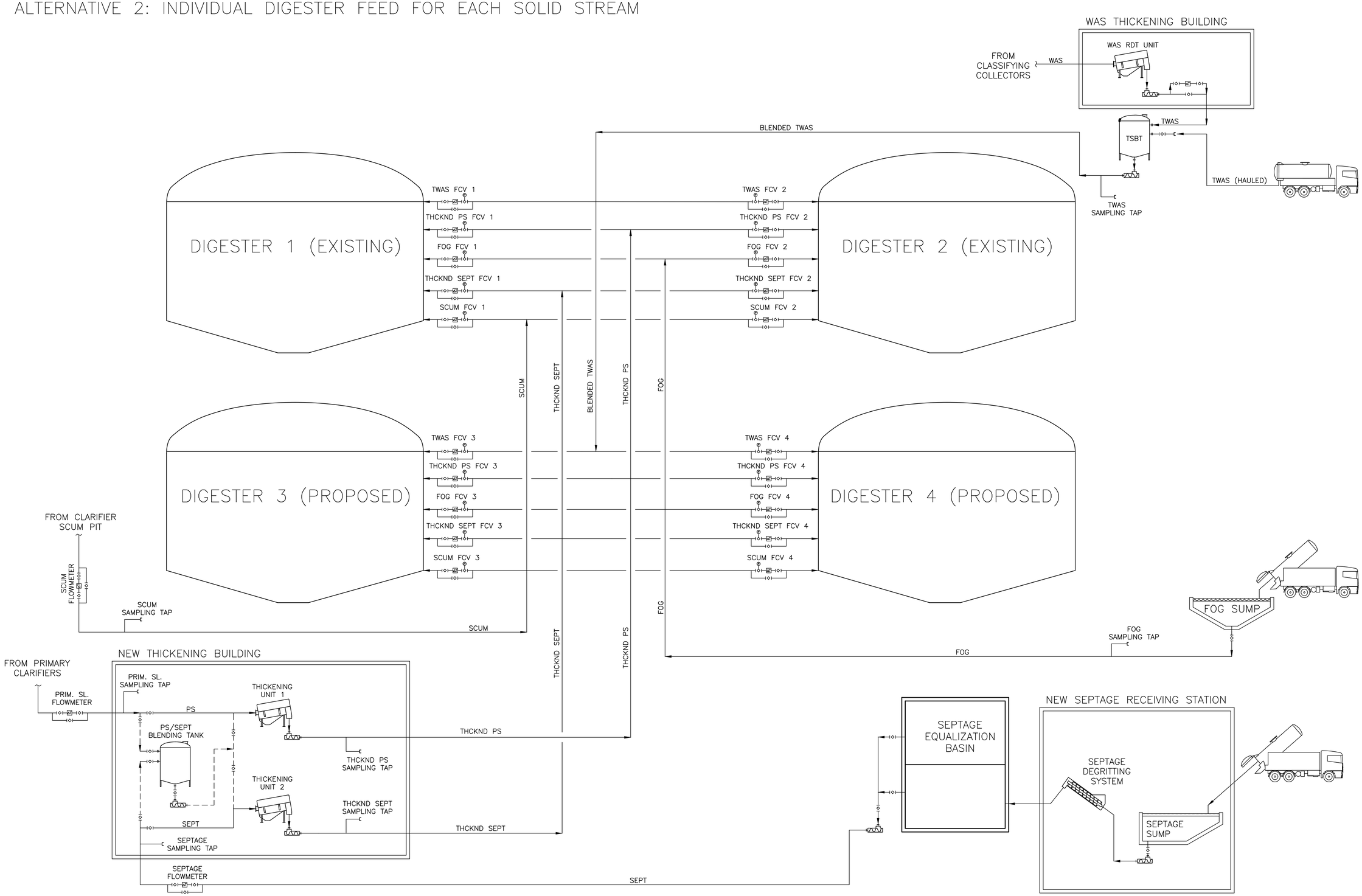

HDR ENGINEERING, INC.
929 108th Ave NE
Suite 1300
Bellevue, WA 98004

0 1/2 1
IF THIS BAR DOES NOT MEASURE 1" THEN DRAWING IS NOT TO FULL SCALE

PROJECT NO.

EXHIBIT

ALTERNATIVE 3: CENTRALIZED DIGESTER FEED

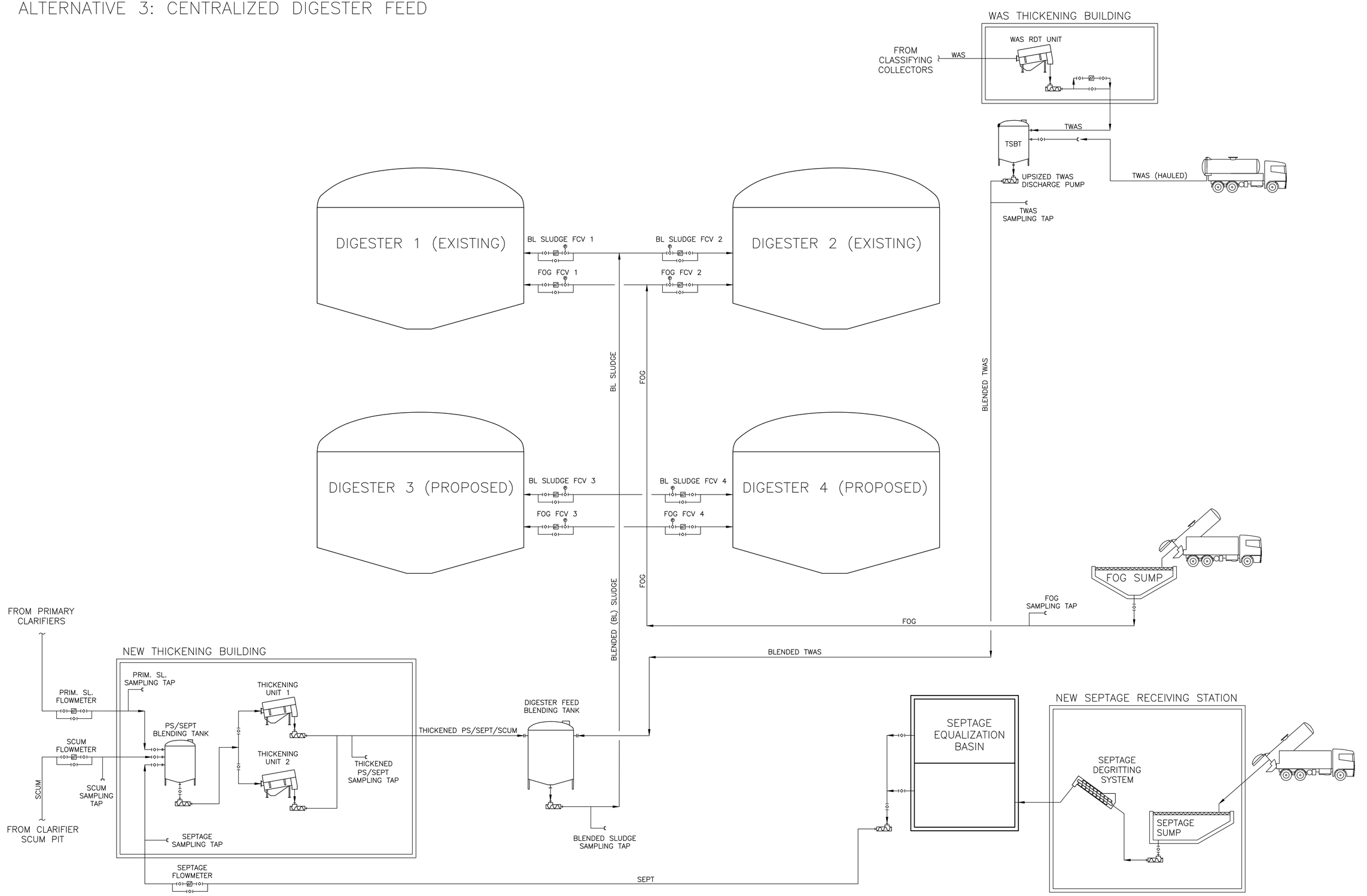

HDR ENGINEERING, INC.
929 108th Ave NE
Suite 1300
Bellevue, WA 98004

0 1/2 1

IF THIS BAR DOES NOT MEASURE 1" THEN DRAWING IS NOT TO FULL SCALE

PROJECT NO.

EXHIBIT

CENTRAL KITSAP TREATMENT PLANT (CKTP)
PLANT SOLIDS AND LIQUID HAULED WASTE UPGRADES
WORKSHOP 4: DIGESTER COVER AND THICKENING EQUIPMENT – 07/24/2023

MEETING MINUTES

ATTENDEES:

CKTP STAFF:

- Chris Sheridan, Utility Operations Manager
- Nick Martin, Construction Manager
- Rich Neal, Operations Lead
- Scott, Instrumentation Manager
- John Yates, Facilities Manager
- Matt Pickering, Lab Manager
- Floyd Bayless, Construction Manager
- Dennis Graham, Maintenance

HDR STAFF:

- Jeff Zahller
- Adam Parmenter
- Andrew Staples
- John Koch
- Matt Chapman
- Luke Thompson
- Amara Cairns
- Matheus Tolentino Lauar

DISCUSSION:

- DECISIONS ON THICKENING EQUIP IS CONDITIONAL TO CERTAIN DECISIONS ABOUT SEPTAGE TREATMENT TO BE MADE AT THE NEXT WORKSHOP
- RECAP FROM PREVIOUS WORKSHOPS:
    - TWO VS ONE NEW DIGESTER
    - THICKENING BUILDING ON THE SOUTH SIDE
    - CENTRALIZED SEPTAGE/FOG TREATMENT
    - RECAP OF CRITERIA WEIGHTING

1. **DIGESTER FEED STRATEGY (LEFTOVER DISCUSSION FROM PREVIOUS WORKSHOP)**
    a. **HYBRID OPTION:**
        - SEPARATES STREAMS FROM NORTH AND SOUTH THICKENING BUILDINGS + FOG

- ALSO NEED A SCUM FEED LINE FOR PRIMARY SCUM. SECONDARY SCUM COULD GO TO PLANT DRAIN SYSTEM.
- SCHEMATICS PROVIDED DURING WORKSHOP SHOW ONE FLOWMETER PER FEED POINT TO EACH DIGESTER BUT COULD BE REDUCED TO ONE PER FEED LINE.
- FLOWMETERS FOR PRIMARY SLUDGE (PS) AND SEPTAGE UPSTREAM OF THICKENING UNITS WOULD ALLOW STAFF TO KNOW THE PROPORTIONS OF SEPTAGE AND PS ON THE THICKENED BLENDED SLUDGE.
    - NOT KNOWING THE PROPORTION OF SEPTAGE AND PRIMARY SLUDGE BEING FED TO EACH DIGESTER IS A CURRENT ISSUE AT CKTP. CKTP DOESN'T CURRENTLY HAVE A GOOD SAMPLING POINT FOR PS BEFORE THICKENING.
    - FLOWMETERS AND SAMPLING POINTS UPSTREAM OF PROPOSED BLENDING POINT FOR SEPTAGE AND PS ARE NEEDED FOR MASS BALANCE ON THICKENING UNIT.
        - SAMPLING POINT CAN BE REPLACED OR SUPPORTED BY SOLIDS FLOWMETER
- OPERATION OF PRIMARY CLARIFIERS MAY HAVE TO BE ADJUSTED TO MAINTAIN A BLANKET FOR CONSISTENT THICKNESS ON THE PRIMARY SLUDGE TO THICKENING.
- **HYBRID OPTION IS KITSAP'S PREFERENCE FOR NOW**

b. INDIVIDUAL FEED STRATEGY:

- INDIVIDUAL SOLID STREAM FEED
- 5 FEED LINES: TWAS (CKTP's AND HAULED), SEPTAGE, PRIMARY SLUDGE, SCUM, AND FOG.

c. CENTRALIZED FEED STRATEGY:

- COMMON BLENDING TANK FOR ALL SOLID STREAMS EXCEPT FOR FOG.
- OFF TOPIC: INCLUDE pH METER ON SEPTAGE EQUALIZATION TANK

- **GENERAL DISCUSSION:**
    - ADDITIONAL WAS LINE WOULD BE ROUTED TO NEW SOUTH THICKENING BUILDING FOR REDUNDANT WAS THICKENING
    - FOR HAULED TWAS, CKTP CURRENTLY SAMPLES MATERIAL FROM THE TRUCK AND ASSUMES VOLUME OF A FULL TRUCK.
    - HAVE ISOLATION AND BYPASS ON THE FLOW METERS.
    - HAVE HOT WATER FOR FLUSHING ON SLUDGE FLOW METERS.
    - CONFIRM TO ADD A FLOW METER ON SEPTAGE RECEIVING, FOR BILLING AND REPORTING PURPOSES
    - PRIMARY SCUM SHOULD BE SENT DIRECTLY TO DIGESTERS.

2. FACTSHEETS - DIGESTER COVERS

a. FIXED COVERS:

- OVIVO OFFERS OPTION OF MEMBRANE SEAL INSTEAD OF TRADITIONAL SKIRT
    - MEMBRANE CAN BE PATCHED, REPLACEMENT WHEN NEEDED - NOT SPECIAL SKILLS TO REPLACE IT

- FIXED COVER WOULD ALLOW FOR ACCESS FROM THE TOP AND THE SIDES
    - CURRENT DIGESTER HAS SIDE ACCESS FROM CONTROL BUILDING TO DIGESTER TANK -> CURRENT CODES DO NOT ALLOW THAT ANYMORE.
- GENERAL CONSENSUS THAT THE FACILTY DOES NEED SOME FORM OF GAS STORAGE DUE TO PAST PROBLEMS AND THE NEED TO EITHER RESTART EXISTING COGEN OR POSSIBLY A NEW SYSTEM WITH CASCADE.

b. FLOATING COVER:

- WOULD REQUIRE FLEXIBLE CONNECTIONS TO THE TANK COVER
- RAIN COULD POTENTIALLY ENTER THE DIGESTER DUE TO THE GAP BETWEEN COVER AND TOP OF DIGESTER WALL
- ODOR ISSUES
- SLOW COVER MOVING IS SAFER FOR OPERATIONS.

c. MEMBRANE COVER:

- IF OTHER COVER TECHNOLOGY IS PREFERRED, AN ALTERNATIVE IS TO HAVE A LOW OR HIGH PRESSURE SEPARATE GAS STORAGE. (LOW PRESSURE PREFERRED AS HDR EXPERIENCE IS THAT MOST ALL HIGH PRESSURE STORAGE IS BEING REPLACED).
- PIPING WOULD CONNECT ALL DIGESTER COVERS (APPLICABLE TO ALL DIGESTER) SO THAT ALL HEADSPACES ARE CONNECTED FOR GAS STORAGE.
    - IF ONE DIGESTER IS USED AS GAS STORAGE, THEN OVERALL GAS PRESSURES WILL VARY MUCH MORE SLOWLY DUE TO INCREASED GAS STORAGE VOLUME.
    - CASCADE PROPOSAL MAY REQUIRE CKTP TO PROVIDE A CONSTANT GAS FLOW AND PRESSURE.

3. FACTSHEETS - MIXING TECHNOLOGIES

a. LINEAR MOTION MIXER:

- CFD MODELING WOULD BE NEEDED TO CONFIRM SIZING OF EQUIPMENT
- MIN OPERATING LEVEL REQUIRED; APPROX. 10 FT ABOVE THE DISK
- PROVEN TECHNOLOGY, SEVERAL FACILITIES USE IT. SIMPLE, EASY MAINTENANCE. SLOW AND LOW NOISE.
- ONE ISSUE MAY BE WHEN EMPTYING THE TANK, THEN LMM WOULD NOT BE ABLE TO CONTINUE MIXING PAST A CERTAIN LIQUID LEVEL. ALTERNATIVE WOULD BE TO CIRCULATE CONTENTS WITH TRANSFER PUMS AND RECIRCULATION PUMPS.
- POTENTIAL FAILURE FOR THIS EQUIPMENT WOULD BE MANAGED FROM THE OUTSIDE AS MOTOR AND OTHER MECHANICAL COMPONENTS ARE ABOVE THE COVER.

b. PUMPED MIXING:

- GOOD FOR REDUNDANCY. WORKS WITH ALL TYPE OF COVERS.
- HIGHER POWER LOAD.
- HAVING A PLUGGED NOZZLE WOULD REQUIRE TANK TO BE TAKEN DOWN FOR MAINTENANCE

- FOAM MAY BE VERY PROBLEMATIC FOR PUMP OPERATION, WHICH MAY ALSO REQUIRE TANK TO BE TAKEN DOWN.
    - FOAM BUSTER NOZZLE OR RECIRCULATION OF CONTENTS FROM BOTTOM OF THE TANK TO THE TOP OF TANK WOULD BE BENEFICIAL TO PREVENT FOAMING
- NONE OF THESE MIXING TECHNOLOGIES WOULD PREVENT HEAVY MATERIALS (GRIT, ETC) TO SETTLE ON DIGESTER TANK.

c. SUBMERSIBLE TURBINE MIXER:

- NOT POSSIBLE ON A FLOATING COVER, BUT POSSIBLE ON A MEMBRANE COVER
- GOOD FOR MAINTENANCE AS YOU CAN EASILY REMOVE EQUIPMENT FROM INSIDE DIGESTER
- THERE COULD BE ISSUES WITH RAGS GETTING CAUGHT ON THE TURBINE
- ORIGINAL INTENT OF THIS EQUIPMENT PER MANUFACTURER IS TO MIX CONTENTS AT A HIGHER SOLIDS CONCENTRATION PERCENTAGE.
- STRONGEST, MOST AGGRESSIVE MIXING

- ALL EXISTING INSTALLATIONS ARE RECENT SO IT'S HARD TO GAUGE HOW ROBUST THE TECHNOLOGY IS.

4. FACTSHEETS - THICKENING EQUIPMENT

a. ROTARY DRUM THICKENER (FKC AND HUBER):

- QUESTION ON HOW SWING UNIT WOULD WORK FOR THICKENING WAS -> MAY NOT WORK WELL FOR BOTH TYPES OF MATERIAL (SEPTAGE/PS AND WAS)
- HUBER UNIT IS SLIGHTLY DIFFERENT DUE TO DRUM BEING AT AN ANGLE.
- FKC MAY BE MORE ROBUST AND THERE'S A BENEFIT ON FKC BEING BASED NEARBY KITSAP
- SLUDGE SAMPLES SHOULD BE SENT TO SELECTED MANUFACTURER TO CONFIRM PERFORMANCE

b. CENTRIFUGE (CENTRYSIS)

- 8 TO 12 HOURS OF OPERATION MAX. -> MORE OPERATION EFFORT REQUIRED COMPARED TO ROTARY DRUM
- LESS POLYMER REQUIRED
- HIGH ELECTRICAL LOAD
- MANUFACTURER WAS NOT VERY CERTAIN ON SEPTAGE THICKENING PERFORMANCE PRIOR TO SAMPLING
    - SEPTAGE COULD CAUSE EXCESSIVE VIBRATION, ISSUES WITH GRIT ACCUMULATION.
    - CKTP CURRENTLY EXPERIENCE ISSUES WITH GRIT ON THEIR DEWATERING CENTRIFUGES PROCESSING DIGESTED MATERIAL
- MORE COMPLEX TO CONTROL VARIABILITY OF INFLUENT MATERIAL

5. PAIRWISE EVALUATION

a. 2 NEW 0.65MG DIGESTER VS. 1 NEW 1.3MG DIGESTER

- ELECTRICAL AND INSTRUMENTATION ARE INCLUDED AS % MARKUPS

- PAIRWISE SHOWS THAT TWO DIGESTERS IS THE PREFERRED ALTERNATIVE ON NON-COST FACTORS, MOSTLY DUE TO MUCH BETTER RESILIENCY FOR THE SYSTEM.
- SEE ATTACHED SUMMARY GRAPH.
- **TWO 0.65 MG DIGESTERS IS PREFERRED PATH FORWARD.**

b. COVER AND MIXING TECHNOLOGIES

- BIOGAS FLOW ISSUE: 10% OF THE TIME, BIOGAS FLOWS ARE SMALLER THAN 10 SCFM
    - ISSUE COULD BE MITIGATED BY PERFORMING A MORE CONSISTENT FEEDING TO DIGESTERS AND MORE FREQUENT CENTRATE PUMPING
- SUBMERSIBLE MIXER RANKS LOWER DUE TO BEING A NEWER TECHNOLOGY
- FOR RESILIENT SYSTEM CRITERIA, PUMPED MIXING (THAT ALLOWS FOR REDUNDANT EQUIPMENT) RANKED HIGHER THAN OTHER ALTERNATIVES
- FOR PROPRIETARY EQUIPMENT, PUMPED MIXING RANKS HIGHER THAN OTHER ALTERNATIVES AS CHOPPER PUMPS ARE NOT A PROPRIETARY TECHNOLOGY, ALTHOUGH THE NOZZLES ARE.
- FIXED COVER ALTERNATIVES WITH PUMPED MIXING AND LMM RANKED CONSIDERABLY HIGHER THAN OTHER ALTERNATIVES, BUT IT DOES NOT ADDRESS KITSAP'S CURRENT ISSUE OF BIOGAS STORAGE.
    - GAS HOLDING MEMBRANE WITH PUMPED MIXING RANKED THIRD.
    - AFTER REEVALUATION OF CRITERIA, GAS HOLDING MEMBRANE WITH PUMPED MIXING RANKED FIRST, WITH A SCORE SLIGHLY ABOVE FIXED COVER WITH PUMPED MIXING.
    - HDR TO EVALUATE ALTERNATIVES TO PROVIDE GAS STORAGE (SEPARATE MEMBRANE SPHERE IF FIXED COVER IS SELECTED) -> ONE OF THE DIGESTERS WITH MEMBRANE COVER?
        - EXISTING GRAVITY THICKENERS ARE NOT GOOD CANDIDATES DUE TO STRUCTURAL CONCERNS
        - IF TWO DIGESTERS ARE EQUIPMENT WITH MEMBRANE COVERS, THOSE WOULD BE BETTER CANDIDATES TO BE OPERATED AS SECONDARY DIGESTER
- KITSAP STAFF CONSIDER PUTTING GAS MEMBRANE COVER ON ONE OR TWO OF THE DIGESTERS, NOT ON ALL DIGESTERS
- PUMPED MIXING WOULD LIKELY BE SELECTED AS THAT WOULD WORK WITH BOTH, FIXED COVER AND MEMBRANE COVERS.
- SEE ATTACHED SUMMARY GRAPH.
- CONFIRMATION OF OPTIONS (TENTATIVE PATH TO MOVE FORWARD):
    - **2 FIXED COVERS + 2 MEMBRANE COVERS, PUMPED MIXING**
        - INITIALLY PLACE GAS HOLDER COVERS ON NEW DIGESTERS TO PROVIDE BETTER CONTROL OF SIDEWALL ACCESS, ETC.
        - PLACE ON TWO TO PROVIDE REDUNDANCY FOR GAS STORAGE, BUT COULD POSSIBLY REDUCE TO ONE DIGESTER IF PREFERRED.
    - FIXED COVERS WITH SIDE GAS STORAGE (PLAN B).

c. THICKENING EQUIPMENT

- PUMP PRIMARY SCUM DIRECTLY TO DIGESTERS UNLESS COPIOUS QUANTITIES OF WATER IS USED TO GET SCUM TO SCUM PIT.
- SECONDARY CLARIFIER SCUM TO PLANT DRAIN.
- CKTP HAS EXPERIENCED ISSUES MEETING THE DESIGN FLOWRATE FOR THEIR EXISTING WAS-THICKENING RDT UNIT (DESIGN FLOWRATE AT 200-250 GPM, CURRENTLY OPERATED AT 100-110 GPM; ISSUES ABOVE ~160 GPM) - RDT IS OPERATED 24/7.
- HUBER RDT HAS MORE COMPONENTS THAT COULD FAIL COMPARED TO FKC UNIT - MADE HUBER UNITS RANK LOWER ON O&M REQUIREMENTS
- FKC RANKED HIGHER ON 'READILY IMPLEMENTABLE' AS STARTUP AND COMMISSIONING WOULD BE EASIER -> FKC IS BASED IN PORT ANGELES, WA.
- 3 UNITS OF THE FKC EQUIPMENT RANKED HIGHER THAN ALL OTHER ALTERNATIVES FOR RESILIENCY DUE TO CAPACITY FOR REDUNDACY – KITSAP INPUT: PREFER HAVING AND NOT USING (AS MUCH) THAN NEEDING AND NOT HAVING
- IN GENERAL, CENTRIFUGES WERE DEEMED MORE COMPLEX TO OPERATE AND MORE UNCERTAIN FOR PERFORMANCE.
- SEE ATTACHED SUMMARY GRAPH.
- 3 RDT UNITS FROM FKC RANKED 1ST, WITH 2 UNITS FROM FKC RANKING SECOND BY A SLIGHT MARGIN
    - **2 FKC UNITS IS ACTUALLY PREFERRED AS TENTATIVE DECISION**
    - BUT DECISION MAY DEPEND ON ACTUAL RDT CAPACITY (SEND SAMPLES OF SEPTAGE, PRIMARY SLUDGE, AND WAS TO FKC FOR TESTING); CONFIRM THAT UNIT WOULD WORK FOR BOTH WAS AND PS/SEPTAGE (MAY BE AN ISSUE OF DRUM OPENING SIZES)

6. EXTRA TOPICS:

- **GOOCH SPIRAL HEAT EXCHANGER PREFERRED**
- RECIRCULATION PUMPS:
    - **ROTARY LOBE PUMPS OK FOR DILUTE SEPTAGE**
        - PRESSURES < 50 PSI
        - SOLIDS < 5%
    - **PROGRESSIVE CAVITY PUMPS FOR OTHER TYPES OF SOLIDS AND ALL THICKENED SLUDGE LINES.** NO MOYNO. NETZSCH PUMPS ARE MUCH LONGER AND NEED TO BE CAREFUL ABOUT ALLOWING INTO BID. DO NOT USE THE NEWER SCT SEEPEX PUMPS AS WE HAVE HAD ISSUES IN THE FIELD WITH PUMP MOVEMENT AND "VIBRATION". SEEPEX SERIES "N", "T" AND "D" PUMPS ARE FINE.
    - **ONLY FLYGT PUMPS ALLOWED FOR SUBMERSIBLE.**
- CENTRATE STORAGE
    - EXISTING GRAVITY THICKENERS WOULD WORK AS 2-3 DAYS OF STORAGE. OPTION TO REPURPOSE EXISTING SEPTAGE DILUTION WET WELL TO PUMP CENTRATE TO GRAVITY THICKENERS AND LOOK AT GRAVITY FLOW TO PRIMARIES.
    - **PROCEEED WITH FURTHER DEVELOPMENT OF THIS OPTION.**
- BIOGAS AND NATURAL GAS DISCUSSION:

- ISSUES WITH EXISTING CO-GEN: GAS QUANTITY AND GAS QUALITY
- NEED NATURAL GAS TO RUN THE CO-GEN SYSTEM
- NATURAL GAS HELPS PLANT MOVE AWAY FROM DIESEL AND WILL HELP STABILIZE OTHER PROCESSES
- HDR ANALYSIS INDICATED CASCADE PROPOSAL WOULD REQUIRE ABOUT $2M IN EQUIPMENT, $4-5M INSTALLED.
- **COUNTY TO GET FURTHER DETAILS FROM CASCADE ON PROPOSAL (WHO WILL PROVIDE TREATMENT, ETC.)**

Rotary Drum Thickener (FKC)	
General description	• Replacement of existing GT's with rotary drum thickeners (RDT) for co-thickening of septage and primary sludge • Backup thickening for WAS
Technology	• **Alternative 1A:** FKC RDT RST 630 x 3000L • **Alternative 1B:** FKC RDT RST 775 x 33600L

Process drawings:

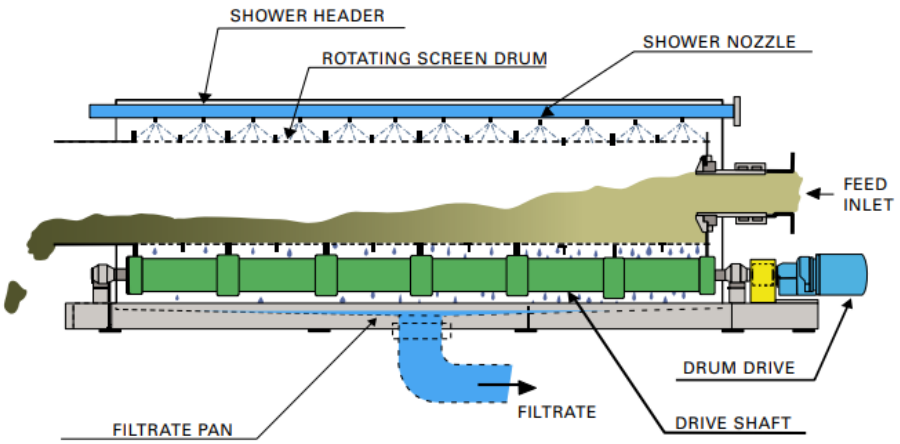

Vendor layouts:

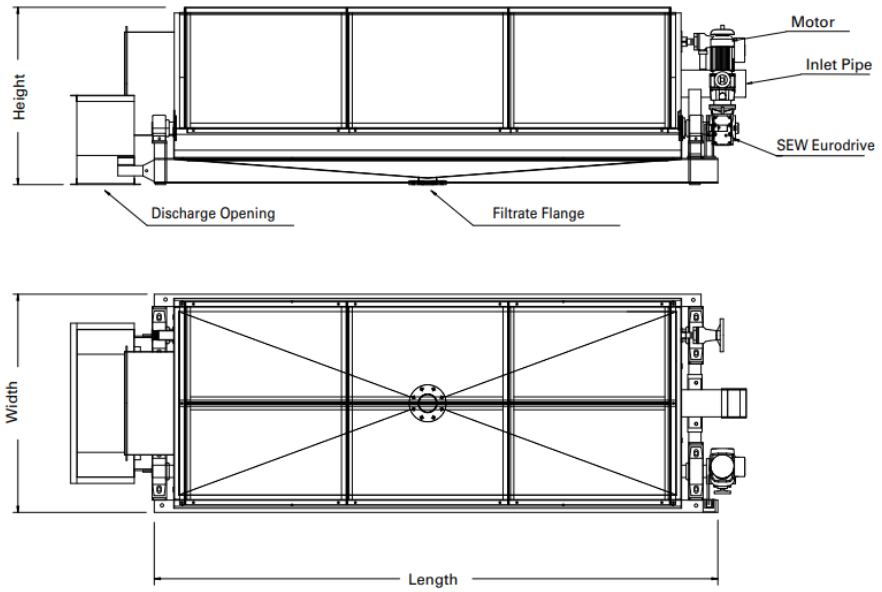

Process description	The dewatering system would operate much like it currently does, but with rotary drum thickeners instead of gravity thickeners. The quantity installed is dependent on the selected alternative. • **Alternative 1A:** (3) FKC RDT RST 630 x 3000L (2 duty, 1 standby) • **Alternative 1B:** (2) FKC RDT RST 775 x 33600L (1 duty, 1 standby) The FKC rotary screen thickener (RST) is designed to pre-thicken fibrous and biological sludge for thickening. The RST consists of a set of rotating drums through which the sludge flows. The drums are lined with perforated stainless-steel screens, which allow the free draining liquids in the conditioned sludge to be removed. The drum sets are supported between two shafts, one of which is coupled to a mechanical variable speed drive. The free draining liquid from the conditioned sludge, or filtrate, is collected in a "filtrate basin" below the drums and funneled to a discharge pipe. Generally, the thickened sludge flows out of the RST directly into the inlet hopper of a screw press. Polymer is blended with sludge upstream of the unit in an upflow flocculation tank that overflows into the RDT. Discharged cake solids would enter a progressive cavity pump for transport to the digesters.
Maintenance required	Primary maintenance would include the following: • Monthly pillow block bearing lubrication • Annual gearbox oil change • As needed replacements to gearbox oil seals
Reference images	 FKC Rotary Drum Thickener with Flocculation Tank

Reference images	 FKC Rotary Drum Thickener Installation

Operation and maintenance impacts	
Power consumption	Power consumption for each of the potential units would be: **Model** / **Unit Power Consumption (HP)** / **Flocculation Tank Power Consumption (HP)** / **Total Power Consumption (HP)** RST 630 x 3000L / 2 / 1 / 3 RST 775 x 33600L / 3 / 1 / 4 Power consumption is comparable to the Huber RDT alternatives 2A and 2B. Compared to centrifuges, rotary drum thickeners will have the lowest power consumption.
Minimizes construction disruption	There are no significant differences in construction disruption between the proposed technologies.
Reduces process complexity	Operationally, all proposed alternatives have similar process complexity.
Access	A 5-foot buffer will be given around equipment and a concrete pad will be placed underneath to ease access for maintenance.
Other	Due to its gravity design, the RDT can be opened during operation, allowing for a visual confirmation of floc formation. This allows the operator to make adjustments by means of polymer addition and/or dilution after visually inspecting the floc formation. The centrifuge does not allow for this.

O&M requirements	Weekly Maintenance: • Lubricate pillow block bearings which support the shafts on the single drum RST • Inspect oil levels on the SEW Eurodrive reducer and lubricate as recommended • Inspect the shower header nozzles for plugging Bi-Annual Inspection: • Remove side covers and inspect shafts and drums for excessive or uneven wear on contact surfaces • Inspect the drum screens for excessive thinning or damage
Process flexibility	
Redundancy	1 redundant unit to operate should one of the duty units need repairs or maintenance.
Process capability	The process capability of the potential models are:

Alternative	Model	Process capability (gpm)
1A	RST 630 x 3000L	100
1B	RST 775 x 3600L	130

Process impacts	
Polymer Use	Estimated polymer dose is 5-10 lbs per dry ton solids. This is likely higher than a centrifuge.
Run Time	The RDT can run with limited operational oversight for 20-22 hr/day.
Central Kitsap Wastewater Treatment Plant impacts	
Space constraints	The dimensions of the potential models are:

Alternative	Model	Length (in)	Width (in)	Height (in)
1A	RST 630 x 3000L	213	56	83
1B	RST 775 x 3600L	254.9	75.4	111.8

Minimizes risks	RDT is an established technology that is slow moving and simple. There is risk of overthickening at low turndown. .
Control noise and odors	Audible noise is less than 70 dB. The equipment has three vent connections: one on the flocculation tank, one on the RDT main body, and one on the discharge chute. Each of these requires 50-75 CFM.
Familiarity with technology	CKTP has been operating an FKC Rotary Drum Thickeners – RST 775 x 3600L since 2005 and an RST 630 x 2000L at their Suquamish Wastewater Treatment Plant.
Reduced technology risk	FKC has many installations at municipal WWTPs that accept septage and co-thicken a mixture of primary, septage, secondary, and other combinations. FKC has an installation at NW Cascade process Septage, Portable Toilets, or Grease Trap Waste. NW Cascade is using the FKC thickener to feed an FKC Screw Press. This equipment has been successfully operating since 2013.
Vendor Cost Quotations	
FKC	The budgetary quotations provided by FKC are: • **(1) RST 630 x 3000L:** $129,500 • **(1) RST 775 x 3600L:** $163,600. This does not include taxes, bonding, power control, logic control, pumps, polymer systems, valves or instrumentation. The O&M cost would be $500 per year for changing the gear box oil.

Rotary Drum Thickener (Huber)	
General description	• Replacement of existing GT's with rotary drum thickeners (RDT) for co-thickening of septage and primary sludge • Backup thickening for WAS
Technology	• **Alternative 2A:** Huber S Drum Size 3 • **Alternative 2B:** Huber S Drum Size 4L

Process drawings

Part section of a size 3 unit:

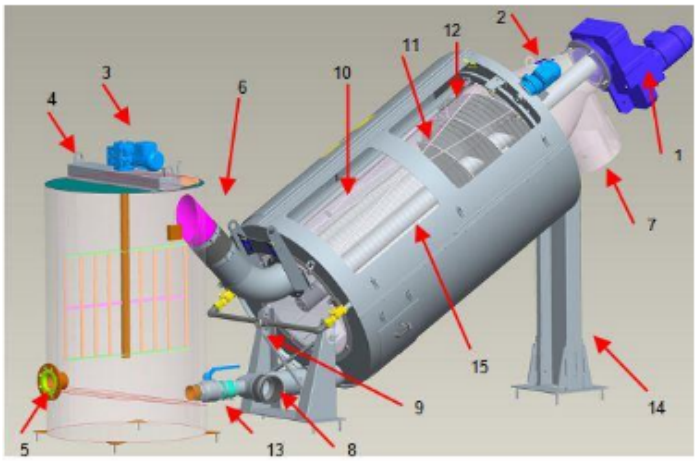

1 Screw drive
2 Spray nozzle basket drive
3 Flocculation reactor stirrer drive
4 Flocculation reactor (optional)
5 Flocculation reactor inlet
6 Reactor overflow / S-DRUM inlet
7 Sludge discharge
8 Filtrate outlet
9 Connection for wash water
10 Screen basket
11 Auger
12 Spray nozzle basket
13 Flocculation reactor outlet
14 Support
15 Inspection openings

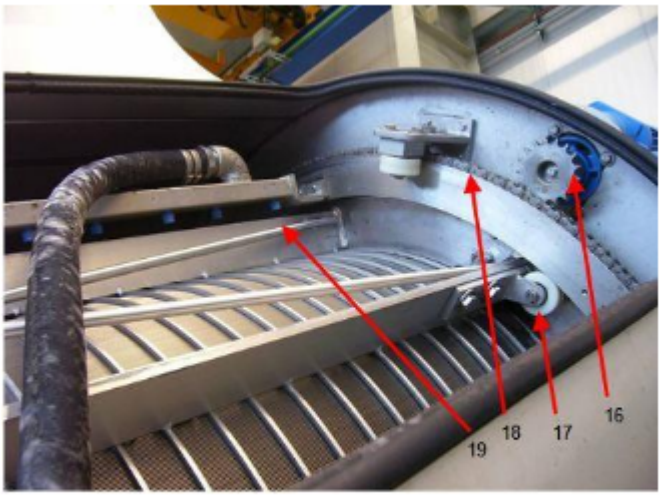

16 Spray nozzle basket drive pinion
17 Rollers
18 Drive chain
19 Nozzles

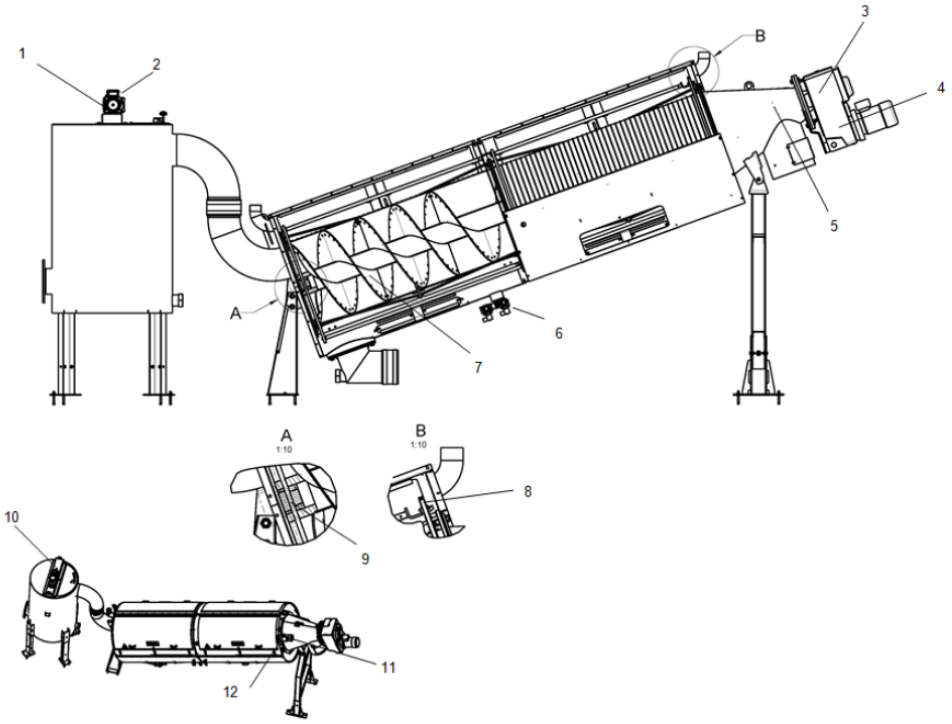

1 Drive pin
2 Gear motor
3 Drive pin
4 Gear motor
5 Protective conductor terminal
6 Solenoid valve
7 Brush on flight
8 Roller chain, pinion
9 Journal pin
10 Level probe
11 Gear motor
12 Drive pin

Process description	The dewatering system would operate much like it currently does, but with rotary drum thickeners instead of gravity thickeners. The quantity installed is dependent on the selected alternative. • **Alternative 2A:** (3) Huber S Drum Size 3 (2 duty, 1 standby) • **Alternative 2B:** (2) Huber S Drum Size 4L (1 duty, 1 standby) The RDT consists mainly of a screw conveyor, which rotates inside a cylindrical screen basket at a variable speed. The free water is filtered through the screen apertures and runs off through the filtrate outlet inside the casing pipe. The screw conveyor transports the solids towards the sludge discharge against the force of gravity. Polymer is blended with sludge upstream of the unit in an upflow flocculation tank that overflows into the RDT. Discharged cake solids would enter a progressive cavity pump for transport to the digesters.

Maintenance required	Primary maintenance would include the following:
	• Oil change based on operating instructions for the drive motor gearing.
	• Brush replacement.
	• Replacement of components of the spray nozzle basket drive system.
	• Replacement of components subject to wear, including:
	  ○ Brush on screw flights
	  ○ Shaft bearing
	  ○ Rollers and suspension of spray nozzle basket
	  ○ Drive chain and pinion for spray nozzle basket
	  ○ Spray pipe nozzles

Reference images	

Operation and maintenance impacts

Power consumption

Power consumption for each of the potential units would be:

Alternative	Model	Unit Power Consumption (HP)	Flocculation Tank Power Consumption (HP)	Total Power Consumption (HP)
2A	Huber S Drum Size 3	2	0.25	2.25
2B	Huber S Drum Size 4L	5	0.25	5.25

Power consumption is comparable to the FKC RDT alternatives 1A and 1B. Compared to centrifuges, rotary drum thickeners will have the lowest power consumption.

Minimizes construction disruption

There are no significant differences in construction disruption between the proposed technologies.

Reduces process complexity

Operationally, all proposed alternatives have similar process complexity.

Access

A 5-foot buffer will be given around equipment and a concrete pad will be placed underneath to ease access for maintenance.

It is recommended to maintain the following space around the machine for operation/maintenance:

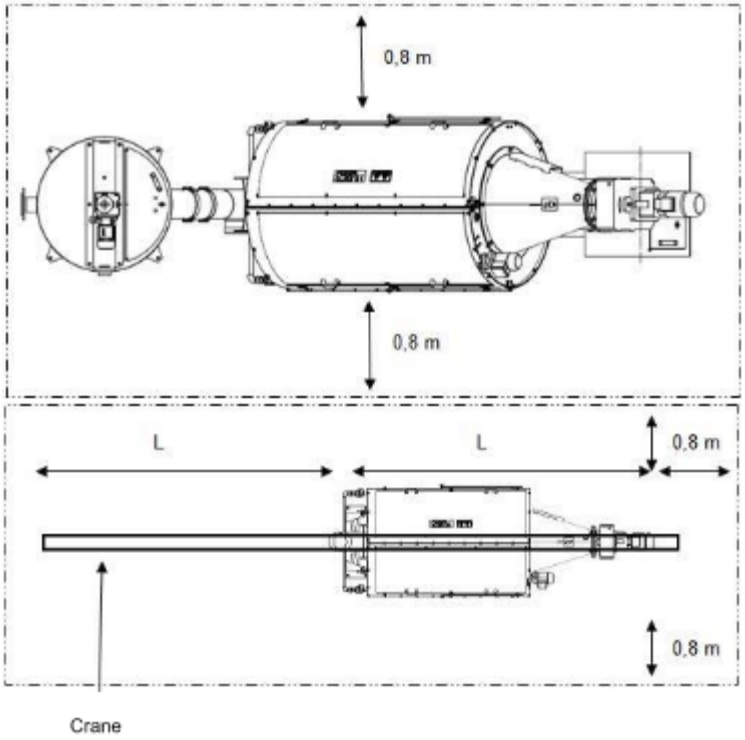

For screw shaft dismounting, the minimum space requirement is one machine length and two times the machine width in one longitudinal direction of the plant.

Other

Due to its gravity design, the RDT floc tank can be opened during operation, allowing for a visual confirmation of floc formation. This allows the operator to make adjustments by means of polymer addition and/or dilution after visually inspecting the floc formation. The centrifuge does not allow for this.

Process flexibility

Redundancy	1 redundant unit to operate should one of the duty units need repairs or maintenance.
Process capability	The process capability of the potential models are:

Alternative	Model	Process capability (gpm)
2A	Huber S Drum Size 3	130
2B	Huber S Drum Size 4L	150

Process impacts

Polymer Use	Estimated polymer dose is 5-10 lbs per dry ton solids. This is likely higher than a centrifuge.
Run Time	The RDT can run with limited operational oversight for 20-22 hr/day.

Central Kitsap Wastewater Treatment Plant impacts

Space constraints

The dimensions of the potential models are:

Alternative	Model	Length (in)	Width (in)	Height (in)
2A	Huber S Drum Size 3	185.6	57.2	84.4
2B	Huber S Drum Size 4L	267.5	57.3	106.9

Minimizes risks

RDT is an established technology that is slow moving and simple. There is risk of overthickening at low turndown. .

Control noise and odors

Noise shall be less than 70 dB.

To reduce odor nuisance, the air volume inside the machine should be changed approximately 20 times per hour.

The machine volume includes the flocculation reactor, the screw thickener and the thickened sludge storage tank (option).

Model	Machine Volume (CF)
Huber S Drum Size 3	123.6
Huber S Drum Size 4L	211.9

Familiarity with technology

CKTP is familiar with rotary drum technology. They have been operating an FKC Rotary Drum Thickener – RST 775 x 3600L since 2005 and an RST 630 x 2000L at their Suquamish Wastewater Treatment Plant.

Reduced technology risk

RDTs have a low technology risk since CKTP is familiar with the technology.

Vendor Cost Quotations

Huber

The budgetary quotations provided by Huber are:

- **(3) S Drum Size 3:** $727,000
- **(2) S DRUM Size 4L:** $618,000

These quotations include the Huber Rotary Screw Thickener, flocculation reactor, control panel, and freight and startup services.

Centrifuge Thickening (Centrysis)	
General description	• Replacement of existing GT's with thickening centrifuge for co-thickening of septage and primary sludge • Backup thickening for WAS
Technology	• **Alternative 3A:** Centrysis Centrifuge THK-350 • **Alternative 3B:** Centrysis Centrifuge THK-600

Process drawings

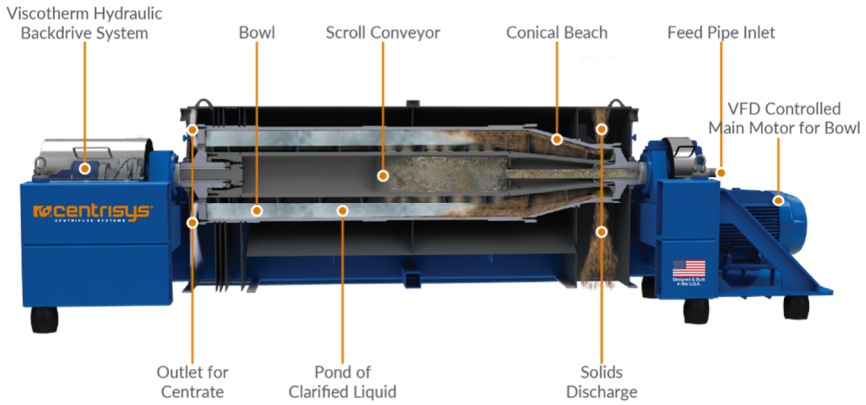

Vendor layouts:

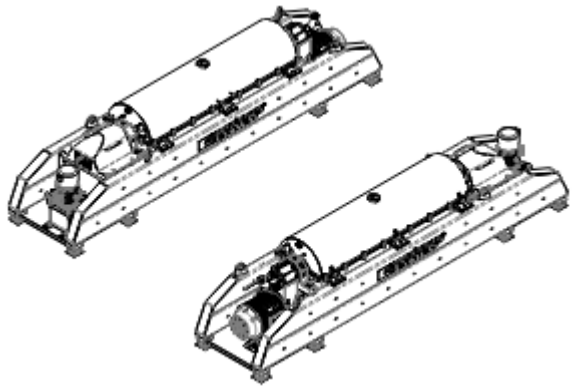

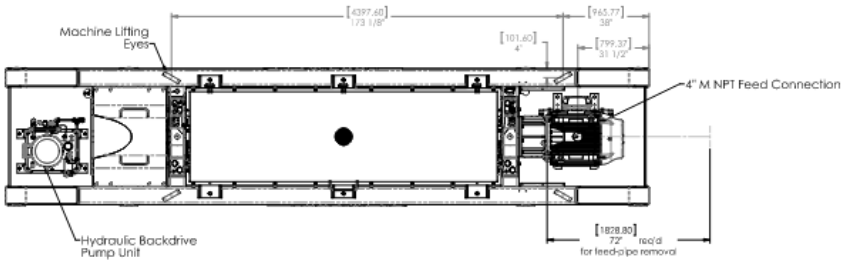

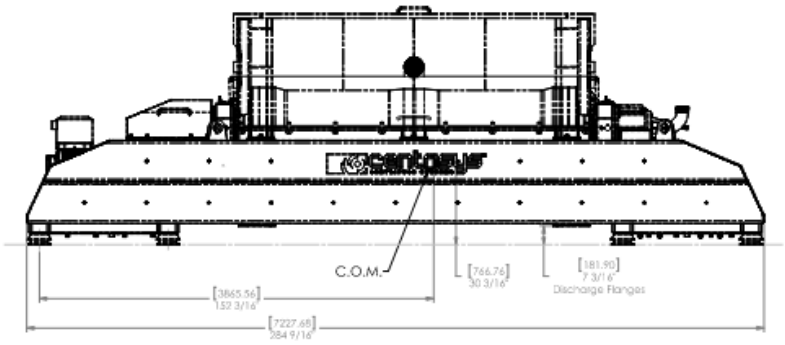

Process description	The dewatering system would operate much like it currently does, but with centrifuges instead of gravity thickeners. The quantity installed is dependent on the selected alternative. • **Alternative 3A:** (2) Centrysis Centrifuge THK-350 (1 duty, 1 standby) • **Alternative 3B:** (2) Centrysis Centrifuge THK-600 (1 duty, 1 standby) A decanter centrifuge, also known as a horizontal bowl centrifuge, solid bowl centrifuge or scroll centrifuge, is a machine used to separate a solid material from a liquid(s) using a high-speed and continual rotational process. Polymer is blended with sludge upstream of the unit to produce a flocculated stream prior to entry to the centrifuge. Discharged cake solids would enter a progressive cavity pump for transport to the digesters.

Maintenance required	Daily maintenance would include the following: • Fasteners & Guards: Visually check external bolts for looseness and guards for cracking • Discharge Hoppers & Piping: Check for leaks • Noise & Vibration: Observe noise and vibration levels on the panel Weekly maintenance would include the following: • Grease internal bearings • Check belt tension • Check lubricant & oil levels Monthly maintenance would include the following: • Inspection for Wear: Inspect rotor and housing for wear • Wiring, Electrical Components: Check for wear or damage • Discharge Areas: Check solids and liquid discharge areas for wear and obstruction Annual maintenance would include the following: • Conduct a function check to verify the operation of interlocks and system controls • Check the PLC battery • Replace the centrifuges main and internal bearings every 15,000 hours
Reference images	

Reference images	
Operation and maintenance impacts	
Power consumption	The 350 unit has a 75 hp motor and 15 hp backdrive. The 600 unit has a 150 hp motor and 15 hp backdrive. Actual power consumption will be related to the loading and operational time. This technology will have the highest power consumption compared to the RDT due to the high speed operation.
Minimizes construction disruption	There are no significant differences in construction disruption between the proposed technologies.
Reduces process complexity	Operationally, all proposed alternatives have similar process complexity.
Access	A 5 foot buffer will be given around equipment and a concrete pad will be placed underneath to ease access for maintenance.
Other	The centrifuge does not allow for a visual confirmation of floc formation, like the RDT does. This limits the operational ability to respond to solids characteristics by means of polymer addition and/or dilution to only after visually inspecting the centrifuge effluent.
Process flexibility	
Redundancy	1 redundant unit to operate should one of the duty units need repairs or maintenance.
Process capability	The process capability of the potential models are:

Alternative	Model	Process capability (gpm)
3A	THK-350	220
3B	THK-600	460

Process impacts	
Polymer Use	Estimated polymer dose is 2.5-5.0 lbs per dry ton solids. This is the lowest polymer dose of all the alternatives.

Run Time	The centrifuge cannot be run un-manned so run times will need to be compressed to 8-12 hr/day.
Central Kitsap Wastewater Treatment Plant impacts	
Space constraints	The dimensions of the potential models are: **Alternative** / **Model** / **Length (in)** / **Width (in)** / **Height (in)** 3A / THK-350 / 170.67 / 53.73 / 60.54 3B / THK-600 / 284.56 / 60.125 / 77.06 It is recommended to maintain the following space around the machine for operation/maintenance: • Height for RA removal • Distance required for feed pipe removal • Vertical clearance for access under equipment 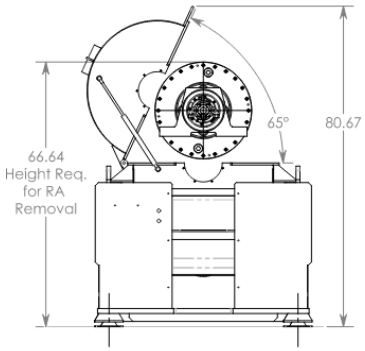 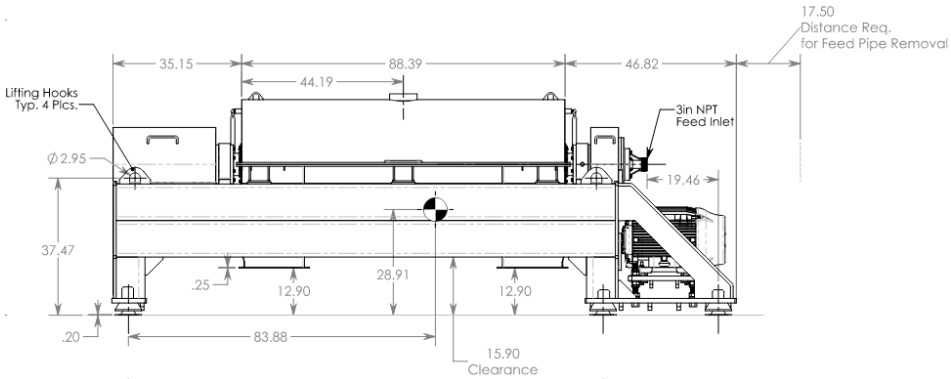
Minimizes risks	There are no significant differences in risk between the proposed technologies.
Control noise and odors	There are no odor control concerns. The THK units have a 95 dBA noise level.
Familiarity with technology	It is important to note that Centrysis does not have experience thickening septage. As with the other technologies, sample testing would be critical.
Reduced technology risk	This technology has the highest technology risk since it has not been used to thicken septage. Co-thickening and sampling with the vendor will reduce the risk.
Vendor Cost Quotations	
Centrysis	The budgetary quotations provided by Centrysis are: • **(1) THK-350:** $531,600 • **(1) THK-600:** $759,100 These quotations include freight, but taxes are excluded.

Gas Holder Membrane Cover

General description	This alternative scope includes: • Gas holder membrane type cover for digesters, including fan system for maintenance of air chamber between inner and outer membranes
Technology	• Ovivo (Ultrastore) and WesTech (DuoSphere) for gas holder membrane cover.

Process drawings

Vendor layouts:

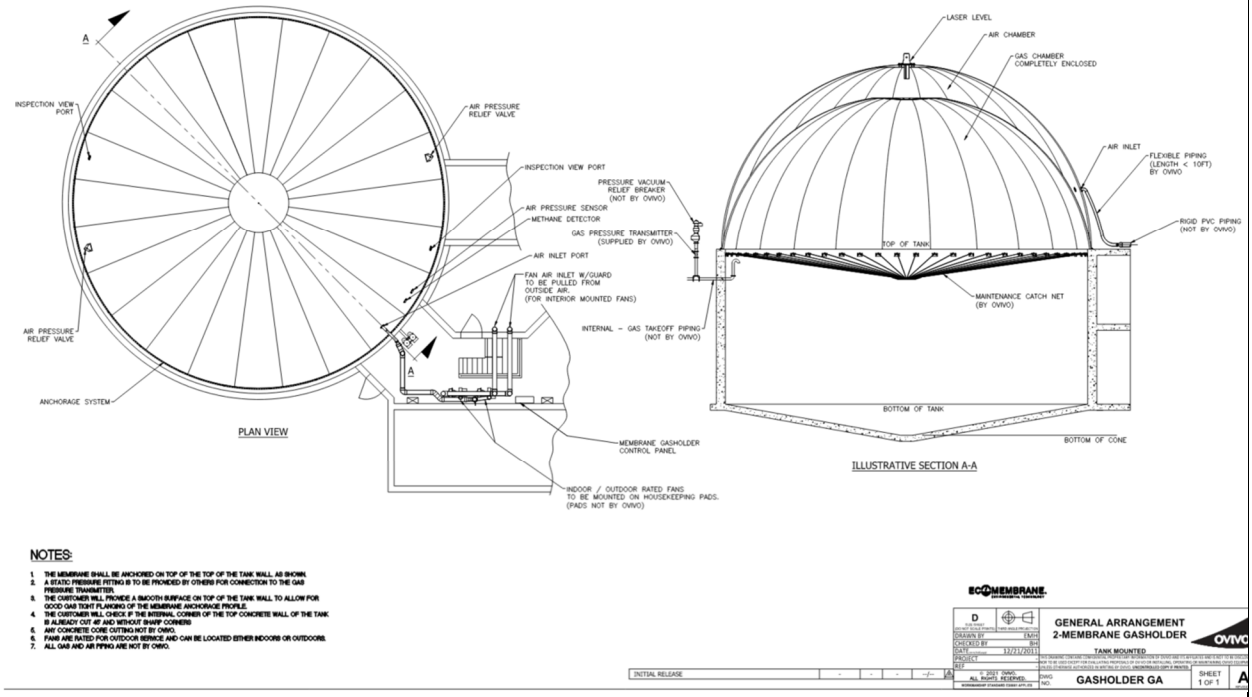

Ovivo Ultrastore Membrane Gasholder Cover Drawing

Process description	The gas membrane cover provides a gas storage option and odor prevention. The outer membrane remains inflated in a fixed position, while the inner membrane moves freely as it stores or releases biogas. A fan/blower system maintains an air chamber between the outer and inner layer, which expands or contracts along with the inner layer as gas storage demand changes.
Maintenance required	Primary maintenance will include the following: • Membrane replacement and repair • Prevention of scum and foam buildup • Maintenance and monitoring of fan/blower system

Reference images	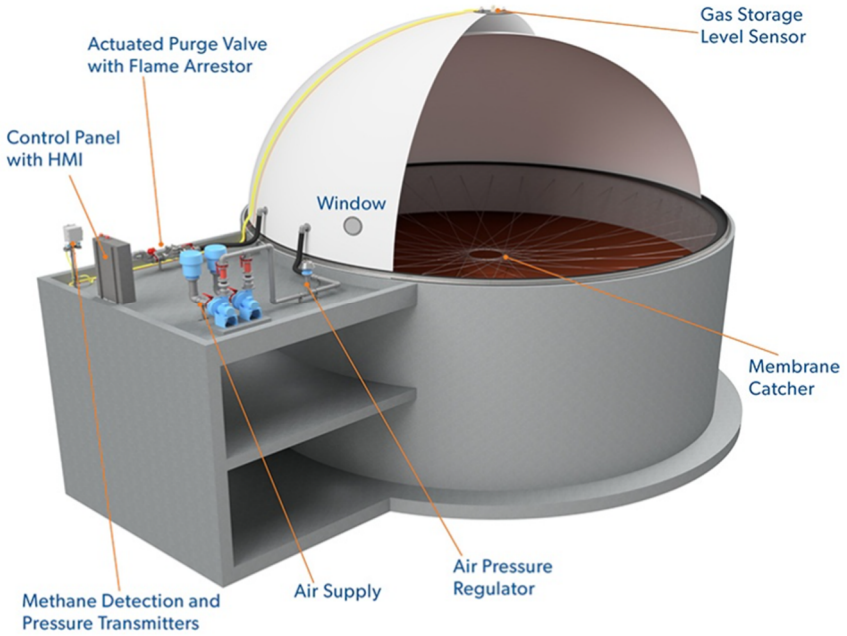 **Example of the WesTech DuoSphere Membrane Gas Holder Cover**
Reference images	 **Example of the Ovivo Ultrastore Membrane Gasholder Cover**
Operation and maintenance impacts	
Power consumption	5 hp fan system (for air chamber between membranes)
Minimizes construction disruption	Typically allows for quicker installation compared to steel covers (fixed or floating) and would require a smaller staging area during construction.

Reduces process complexity	Gas holder cover requires a blower system for exterior air barrier that is not required on other cover technologies.
Access	Cover has fewer options for digester access and will require a new pressure relief system not mounted on the top. Side outlets for process piping and manway access.
Other	A different type of gas membrane cover is available from the submersible mixer manufacturer that would allow the mixing equipment to be mounted from the top of digester.
O&M requirements	Gas holder membrane cover may require additional routine maintenance, such as manufacturer recommended monthly check in of the external membrane integrity and fan system. Membrane requires replacement every 15 years.
Process flexibility	
Process capability	No change in digestion process capability.
Process impacts	
Digestion and biogas storage	Allows for large amounts of gas storage (2 to 3 days) and provides flexibility for gas and liquid storage volume.
Mixing	Will not work with any top mounted mixing systems.
Central Kitsap Wastewater Treatment Plant impacts	
Space constraints	Require additional space to house fan/blower system.
Minimizes process risks	Membrane covers are prone to foam buildup. The gas storage can be advantageous to other systems that require very consistent biogas production.
Control noise and odors	Improves odors control. Noise from blower system will be minimal.
Familiarity with technology	Membrane gas cover is a new technology for CKTP, but is a relatively well established technology for digesters in general.
Reduced technology risk	Membrane cover is a less established technology than fixed and floating covers
Vendor Cost Quotations:	
Ovivo	$503,000 for one (1) 65-ft diameter Ultrastore cover (model 2MH-½-TM-65). Includes inner and outer membranes, air control system, membrane catcher system, etc. Does not account for installation.
WesTech	$705,000 for one (1) 65-ft diameter DuoSphere cover. Includes inner and outer membranes, air control system, membrane catcher system, valves for air control system, etc. Does not account for installation.

Fixed Digester Cover

General description	This alternative scope includes: • Fixed steel cover for digesters. Covers can be painted carbon steel or stainless steel.
Technology	• Ovivo, Walker Process, and WesTech are primary vendors for fixed digester covers.

Process drawings
Vendor layouts:

ITEM	DESCRIPTION
1	DIGESTER TANK WALL
2	ERECTION BEAM
3.1	GAS TAKEOFF PIPE (TOP SIDE DESIGN)
3.2	GAS TAKEOFF PIPE (UNDER SIDE DESIGN)
4	COVER SUPPORT
5	BEARING PLATE
6	THRUST RING
7	CENTER COMPRESSION RING
8	COVER PLATE
9	GAS BONNET (24")
10	SIDE SKIRT
11	NAME PLATE
12	EMERGENCY PRESSURE RELIEF HATCH (36")
13	SAMPLE TUBE
14	DUAL PRESSURE AND VACUUM RELIEF VALVE WITH SAFETY SELECTOR VALVE
15	MANHOLE (36")
16	MANHOLE (42")
17	MIXER PORT

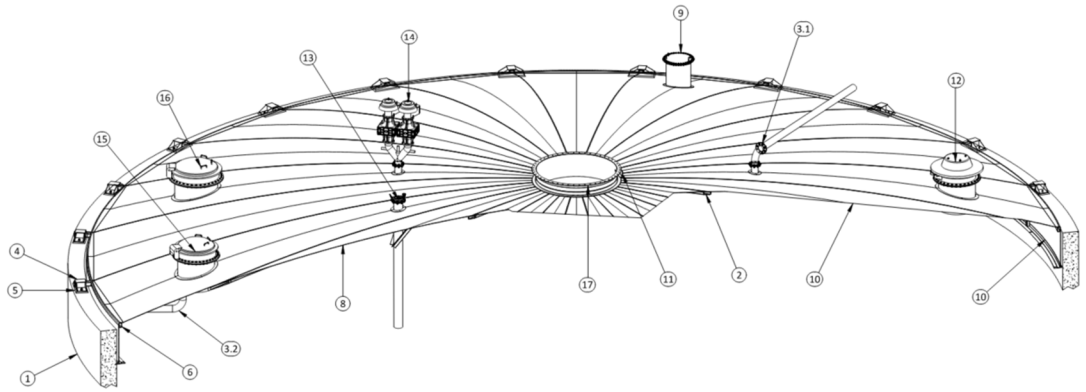

Ovivo Fixed Steel Cover Drawing

Process drawings

Vendor layouts:

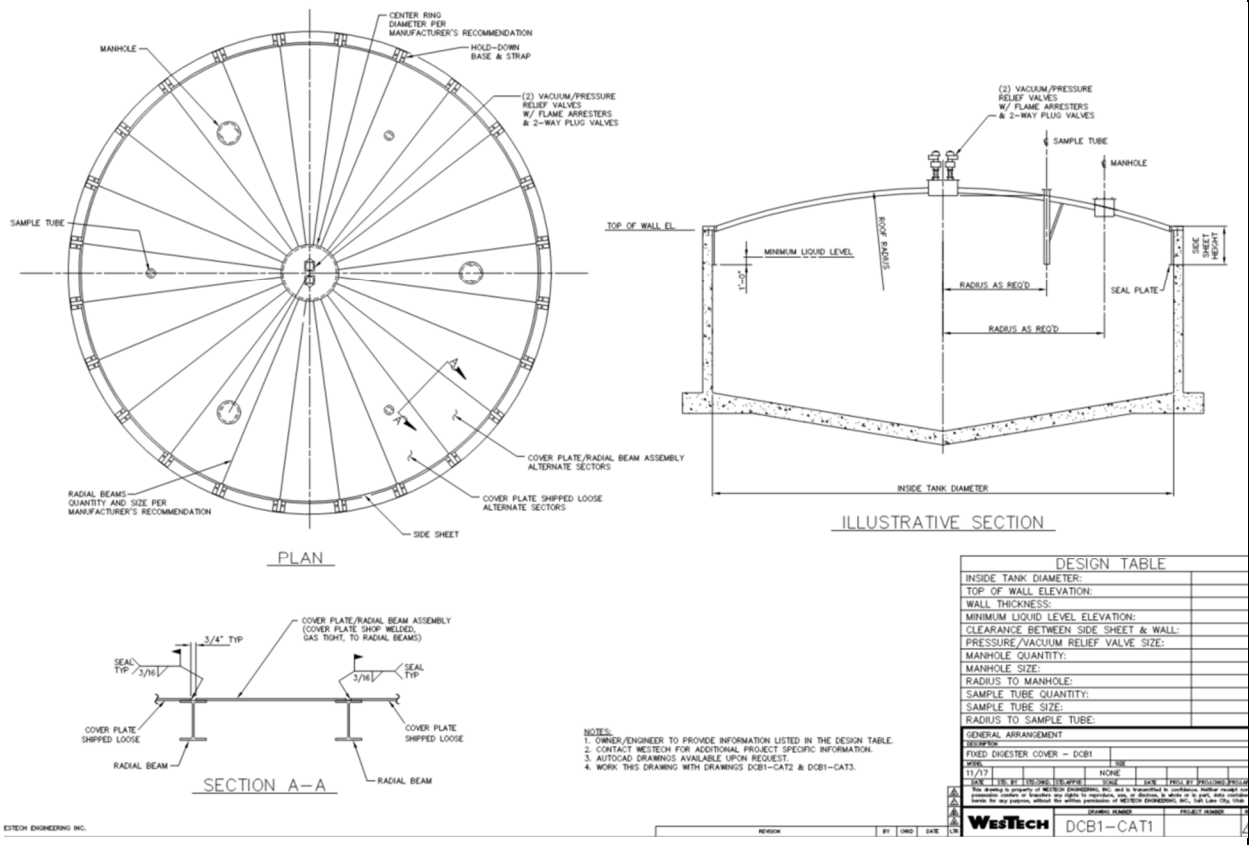

WesTech Fixed Steel Cover Drawing

Process description	Fixed covers are dished upward and anchored to the top or side of the tank wall. The frame consists of arched radial beams or sometimes trusses that extend from a center ring to the skirt plate near the tank wall. These covers work very well for constant-level digesters. If tanks levels vary rapidly, fixed covers will not provide gas storage. Fixed covers work well with virtually any mixing technology. The side seal is traditionally a metal skirt with packing seal, though manufacturers have developed a membrane edge seal gasket with caulking that allows for easier, external replacement. All access points and gas safety equipment can be mounted on top.
Maintenance required	Primary maintenance will include the following: • Coating of digester covers every 10-20 years (only required for carbon steel covers)

Reference images	 **Example of Ovivo Fixed Steel Cover** **Example of Ovivo Fixed Steel Cover**
Reference images	 **Example of WesTech Fixed Steel Cover**
Operation and maintenance impacts	
Power consumption	No power consumption associated with the fixed cover.
Minimizes construction disruption	Larger staging area required and longer installation period, compared to gasholder membrane cover.

Reduces process complexity	Fixed covers are easier to operate and maintain than gas membrane covers and floating covers.
Access	Fixed steel covers can include all necessary access ports.
Other	Insulation recommended for final installed cover.
O&M requirements	Minimal routine O&M, besides insulation and seal replacement. Cover recoating every 10-20 years if carbon steel construction. Recoating after may be costly and would require tank to be offline for extended period. Alternatively, fixed stainless steel cover does not require coating but is more expensive in initial capital expenditure.
Process flexibility	
Process capability	No change in digestion process capability. Matches existing system.
Process impacts	
Digestion and biogas storage	No significant gas storage.
Mixing	Will work with any mixing system.
Central Kitsap Wastewater Treatment Plant impacts	
Space constraints	No additional footprint needed for fixed covers.
Minimizes process risks	The speed at which liquid is drawn out of the variable-level digester must be slow enough for fixed covers to work within gas production limitations if negative pressure conditions might be anticipated. How critical this is can relate to natural gas backups and whether biogas is used to operated critical equipment. Foam control can be integrated with the system within mixing technology design, top mounted draw off of liquid stream, and recirculated flow spray nozzle.
Control noise and odors	Fixed covers provide good odor control and produce no noise.
Familiarity with technology	Fixed covers are a familiar technology to CKTP staff.
Reduced technology risk	Fixed covers are a well-established technology.
Vendor Cost Quotations:	

Ovivo	• Fixed Steel 65-ft diameter Cover (Model 65 F1):
	  ○ Carbon Steel: $494,000
	  ○ 304 Stainless Steel: $1,457,000
	• Ultra Fixed Steel 65-ft diameter Cover (Model 65 U1); membrane seal instead of side sheet (skirt) and annular filler material. Support from digester walls with anchors in shear as opposed to tension on top of digester wall
	  ○ Carbon Steel: $571,000
	  ○ 304 Stainless Steel: $1,303,000
	
	None of the options include installation. Mild Steel options do not include coating cost.

WesTech	• Fixed 65-ft diameter Cover (Model DCB1): ○ Carbon Steel: $615,000 Does not include installation or coating cost.

Floating Digester Cover

General description	This alternative scope includes: • Floating steel cover for digesters. Covers can be carbon steel or stainless steel.
Technology	• Ovivo, Walker Process, and WesTech are primary vendors for fixed digester covers.

Process drawings
Vendor layouts:

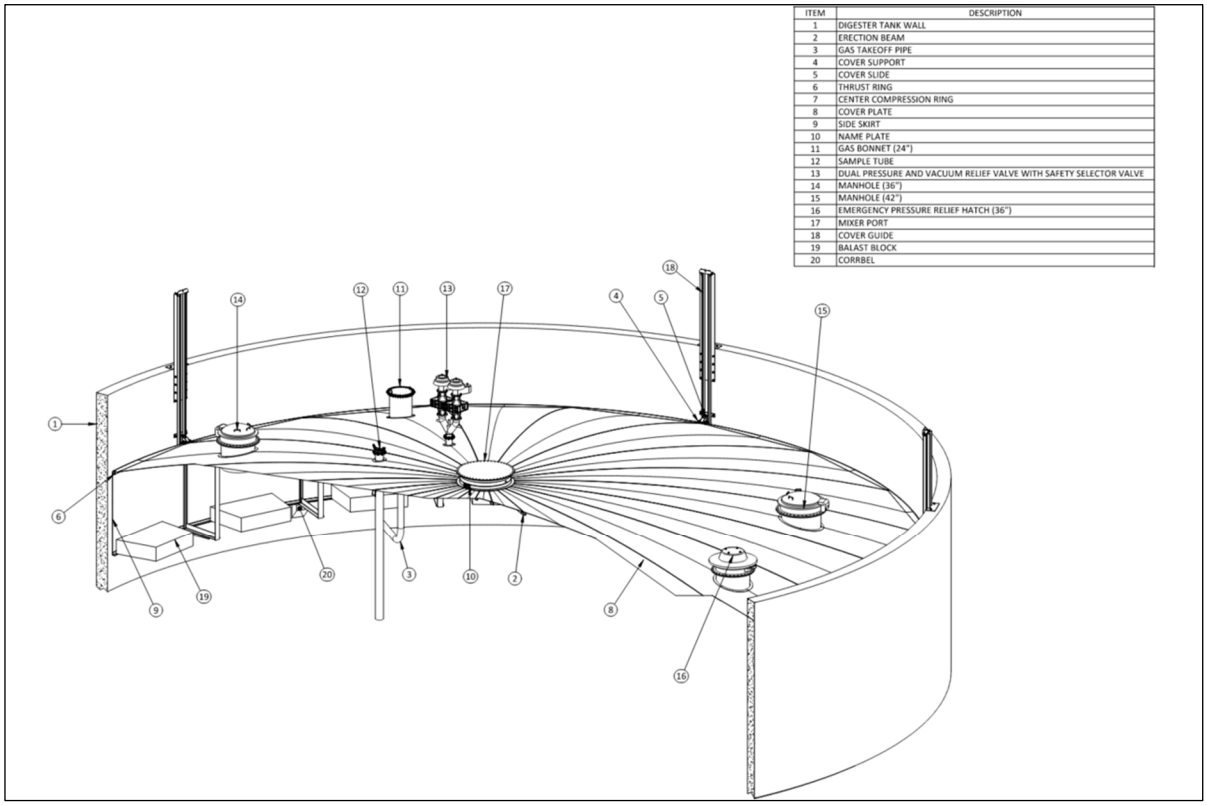

ITEM	DESCRIPTION
1	DIGESTER TANK WALL
2	ERECTION BEAM
3	GAS TAKEOFF PIPE
4	COVER SUPPORT
5	COVER SLIDE
6	THRUST RING
7	CENTER COMPRESSION RING
8	COVER PLATE
9	SIDE SKIRT
10	NAME PLATE
11	GAS BONNET (24")
12	SAMPLE TUBE
13	DUAL PRESSURE AND VACUUM RELIEF VALVE WITH SAFETY SELECTOR VALVE
14	MANHOLE (36")
15	MANHOLE (42")
16	EMERGENCY PRESSURE RELIEF HATCH (36")
17	MIXER PORT
18	COVER GUIDE
19	BALAST BLOCK
20	CORRBEL

Ovivo Floating Steel Cover Drawing

Process description	Floating covers float directly on the sludge or can be designed as gas holders. Their primary function is to allow variable sludge levels. A floating cover can be designed as radial beam (single sheet plate) or truss style (embodies both a ceiling plate and a roof plate, forming an attic space, in which the trusses are located). Guides are mounted to the tank exterior to allow the cover's vertical travel. UHMWPE slides or rollers are mounted on the cover to travel within the guides. Floating covers can provide a modest amount of gas storage and can maintain pressures if tanks levels change more rapidly. The side seal is a liquid seal and can create additional odors.

Maintenance required	Primary maintenance will include the following: • Regular checking of odor release, gas leak, and foam buildup on the digester cover. • Check rails systems to confirm smooth operation and consistent cover level.
Reference images	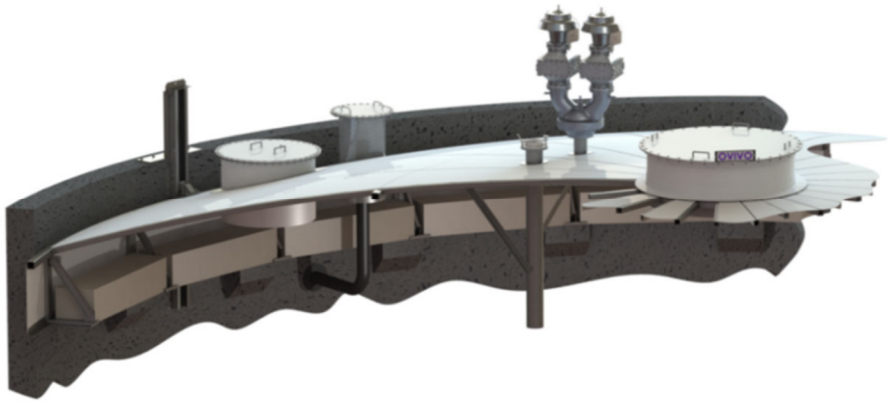 **Example of Ovivo Floating Steel Cover** **Example of Ovivo Floating Steel Cover**

Reference images	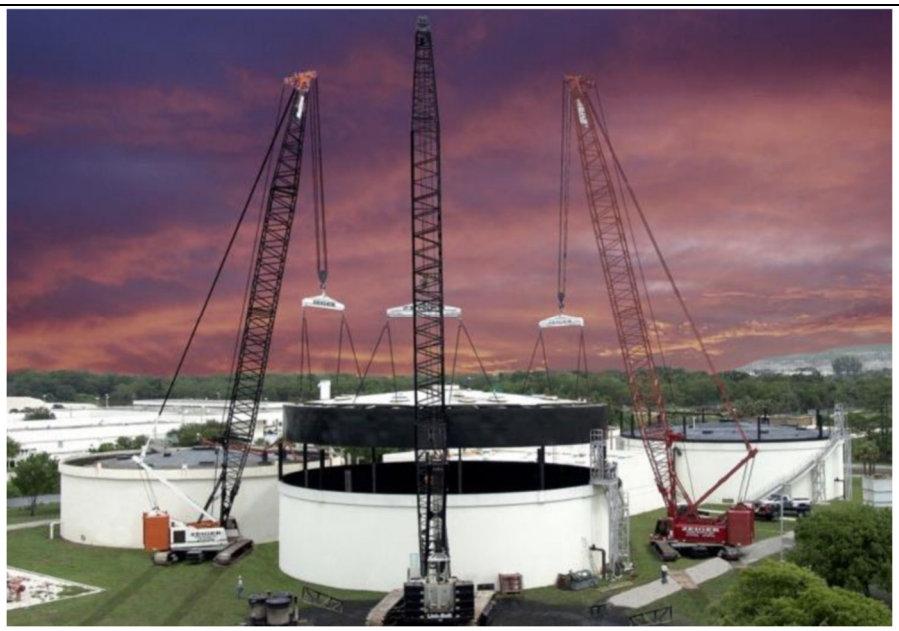 **Example of WesTech Floating Steel Cover**
Operation and maintenance impacts	
Power consumption	No power consumption associated with the floating cover.
Minimizes construction disruption	Larger staging area required and longer installation period, compared to gasholder membrane cover.
Reduces process complexity	Floating covers require additional maintenance compared to fixed covers.
Access	Floating covers can include all necessary access ports top mounted, similar to fixed covers.
Other	Cannot be coupled with submersible turbine mixer. Linear motion mixer shaft has to consider the fluctuation of the cover. Risk of cover tilting.
O&M requirements	Similarly to fixed covers, recoating would be needed every 10-20 years. Additional maintenance required to prevent corrosion on cover guides. Alternatively, floating stainless steel cover does not require coating but costs more in initial capital. Piping connections to the cover can use flex piping and hose that should be maintained and replaced over time. Swivel joint pipe connections allows rigid pipe use in lieu of flexible piping.
Process flexibility	
Process capability	No change in digestion process capability.
Process impacts	
Digestion and biogas storage	Provides some gas storage (8 to 16 hours) while minimizing area for foam.
Mixing	Will work with some top mounted mixing systems.
Central Kitsap Wastewater Treatment Plant impacts	
Space constraints	No additional footprint needed for floating covers.
Minimizes process risks	Lower risk associated with liquid level fluctuation inside digesters, when compared to fixed covers.
Control noise and odors	Floating covers are more prone to odor release from annular space between cover and tank wall.

Familiarity with technology	CKTP staff has not operated floating covers before.
Reduced technology risk	Floating covers are a well-established technology.
Vendor Cost Quotations:	

Ovivo	• Floating Steel 65-ft diameter Cover (Model 65 G1V):
	  o Carbon Steel: $714,000
	  o 304 Stainless Steel: $1,937,000
	
	Cost does not include installation and coating.

WesTech	• Floating Steel 65-ft diameter Cover (Model DCB34): o Carbon Steel: $645,000 Cost does not include installation and coating.

Pumped Mixing

General description	This alternative scope includes: • Pumped mixing system with three new chopper pumps (2 duty + 1 standby) for each pair of digesters; total of 6 pumps for 4 digesters.
Technology	• Vaughan Rotamix system used as basis of design for mixing system (often a sole source).

Process drawings
Vendor layouts:

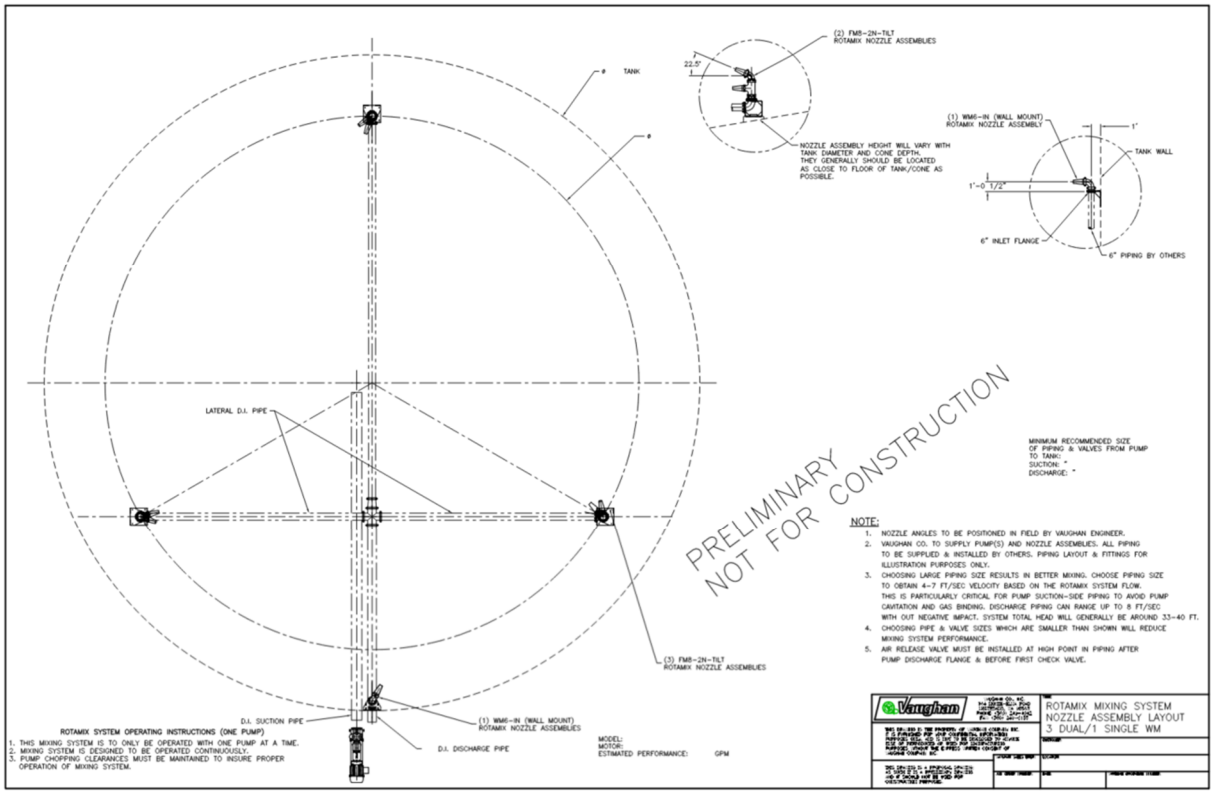

Vaughan Rotamix System Drawing

Process description	The Rotamix dual-zone mixing system uses centrifugal pumps to recirculate flow through a series of internal nozzles set in customized positions. The mixing pattern is a combination of both uniform and vortical fields of flow. In a uniform field of flow, the entire contents rotate as a solid unit with the highest velocity at the outside. In a vortical field of flow, fluid velocities are the greatest at the center, thus creating a vertical-axis vortex. Components include centrifugal (chopper) pumps and nozzles, with interconnected piping and valves provided by the contractor. Pumps are normally single speed, though VFDs can be provided.
Maintenance required	Primary maintenance will include the following: • Routine pump maintenance • Replacement of wear parts (impeller, seal, wear plate, etc) every 5 years

Reference images	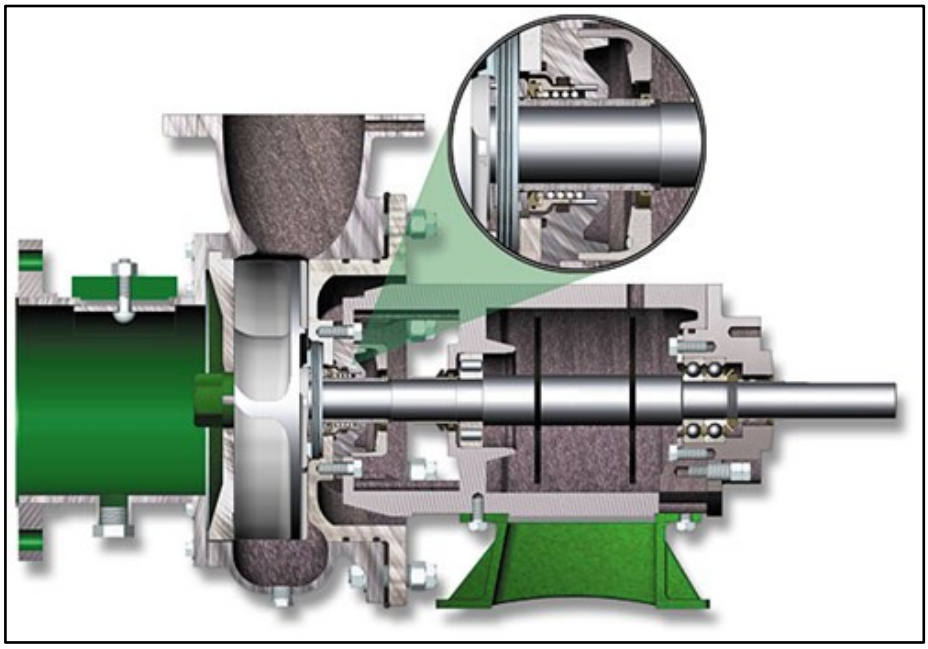 **Example of Rotamix System Chopper Pump** **Example of Rotamix System Nozzle Assemblies**

Operation and maintenance impacts	
Power consumption	50 HP (42 BHP) for each chopper pump; larger power consumption than other mixing systems.
Minimizes construction disruption	Pumps can be installed independently of digester covers, but require footprint outside of that cover.
Reduces process complexity	Pumps are a familiar equipment to CKTP staff and general O&M is less specific than other mixing technologies.

Access	Pumps are installed outside of digesters and can be easily accessed. However, nozzles are not accessible with digesters in operation.
Other	Pumped mixing could be installed for any digester cover type, which is not the case for other mixing technologies. Pumped mixing would also allow for covers to be competitively bid, as the mixing technology would not be associated with the cover type.
O&M requirements	Besides routine pump mixing; pumps would require replacement of wear parts every 5 years per manufacturer's recommendation, and replacement of subassembly (bearings, bearing housing, shaft and mechanical seal) every 10 years.
Process flexibility	
Redundancy	Pumped mixing system would include a duty pump for each digester plus one standby for each pair of digesters (four duty, two standby) to provide redundancy.
Process capability	Promotes mixing of digester contents at 1 in/s for approx. 95% of digester contents, and at 2 in/s for approx. 55% of contents
Process impacts	
Mixing Performance:	Pumped mixing has similar mixing performance (% of digester contents mixed at certain velocity) to linear motion mixer, but lower performance than submersible turbine mixers.
Central Kitsap Wastewater Treatment Plant impacts	
Space constraints	Space within digester complex would be required for pump installation.
Minimizes process risks	Allows for pump redundancy, simple and familiar technology. Operational risks include nozzle clogging (plugging from solids or precipitation of struvite) and gas binding.
Control noise and odors	Pumps would generate more noise compared to other mixing technologies.
Familiarity with technology	CKTP staff is very familiar with technology. The system has multiple installs throughout the United States.
Reduced technology risk	Pumped mixing is a well-established technology.
Vendor Cost Quotations:	
Vaughan	$170,000 Includes: nozzle assembly for one 0.65MG digester, (2) chopper pumps (1 duty + 1 standby), (1) air release valve to be installed at pump discharge

Linear Motion Mixing	
General description	This alternative scope includes: • Central, top mounted Linear Motion (LM) Mixer for each digester.
Technology	• Ovivo LMM system used as basis of design for mixing system (sole source).

Process drawings
Vendor layouts:

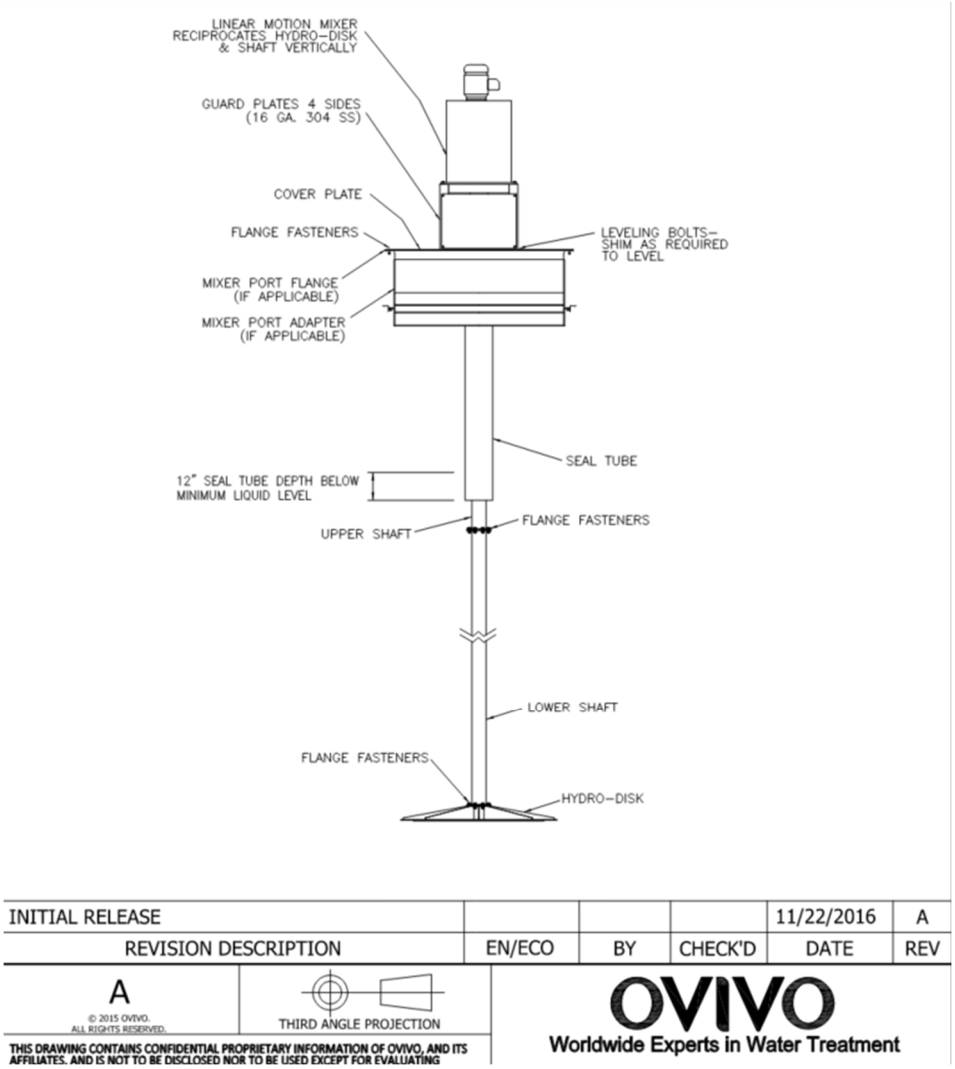

Ovivo Linear Motion Mixing Drawing

Process description	LM mixers provide homogeneous mixing by creating a turbulent liquid-core of micro and macro eddy currents. These currents are accelerated rapidly through the central opening of an oscillating ring-shaped hydro-disk. This disk moves up and down through the mixed liquid and creates the distinctive displacement-mixing action of the LM mixer. A single gear box and drive are top mounted outside of the liquid to allow for maintenance access. Systems are normally single speed motors.
Maintenance required	Primary maintenance will include the following: • Motor and gear box service and inspection.
Reference images	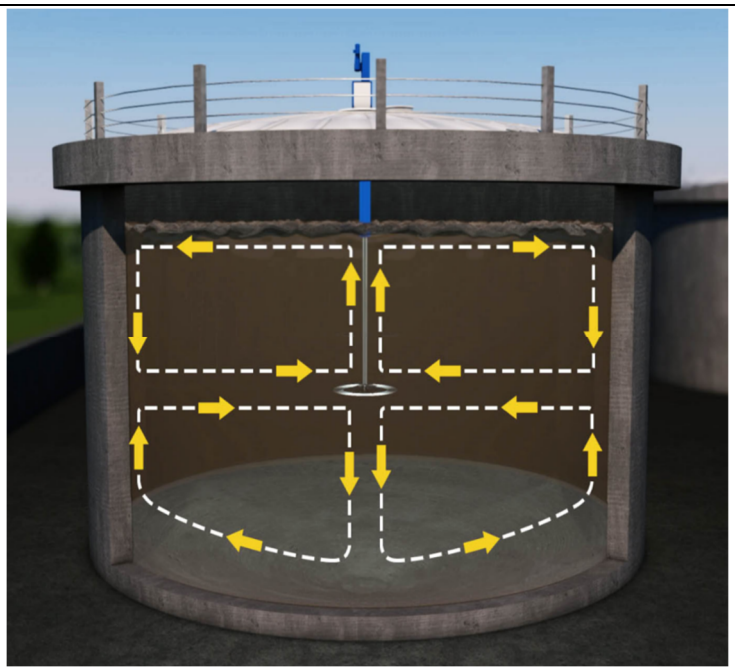 **Example of Ovivo Linear Motion Mixing Operation**

Reference images	 **Example of Ovivo Linear Motion Mixing**
Operation and maintenance impacts	
Power consumption	7.5 Hp for each mixer (one per digester); relatively low power consumption
Minimizes construction disruption	No difference than other mixing technologies. Mixer can only be installed after installation of digester cover.
Reduces process complexity	LM mixers are less complex than pump mixing or submersible turbine mixers. They can only be used with fixed or floating covers.
Access	Access to equipment via tank cover. Motor and gearbox are easily accessible from outside the tank. Mixing components, such as ring-shaped hydro-disk are installed inside tank and are not easily accessed – entire equipment would have to be lifted from tank to get access to mixing components.
Other	LM mixer is a sole source and can benefit from procurement of cover with the same manufacturer to provide single source responsibility (Ovivo).
O&M requirements	Simple motor and gear box, with access from top of the digester. Removal of the entire unit requires a crane, though no motors or service parts are located in the liquid.
Process flexibility	
Redundancy	No redundancy would be available for equipment. Shelf spare gearbox, motor, slide rails, slide blocks, roller assembly, and auto greasers.
Process capability	Promotes mixing of digester contents at 1 in/s for approx. 85% of digester contents, and at 2 in/s for approx. 40% of contents
Process impacts	
Mixing Performance	Similar mixing performance (% of digester contents mixed at certain velocity) to pumped mixing systems and less aggressive mixing compared with submersible turbine mixers.
Central Kitsap Wastewater Treatment Plant impacts	
Space constraints	No additional footprint needed as the LM mixer system is mounted on digester cover. Access to equipment inside tank would require additional labor compared to other mixing technologies.

Minimizes process risks	Does not allow for full redundancy, but system is simple and easy to maintain/repair from the exterior.
Control noise and odors	No significant noise to operators compared to pumped mixing.
Familiarity with technology	LM mixers have not been used by CKTP staff before. The technology has multiple installations through the United States.
Reduced technology risk	LM is a newer technology than pumped mixing, but has many installations throughout the United States and is becoming well established.
Vendor Cost Quotations:	
Ovivo	$314,000. Price for (1) mixer (model LM12/7.5/72); one mixer needed for 0.65MG digester. Cost does not include installation.

Submersible Turbine Mixing	
General description	This alternative scope includes: • Top mounted submersible turbine mixing for each digester.
Technology	• Anaergia OmniMix PSM 1500 used as basis of design for mixing system (sole source).

Process drawings

Vendor layouts:

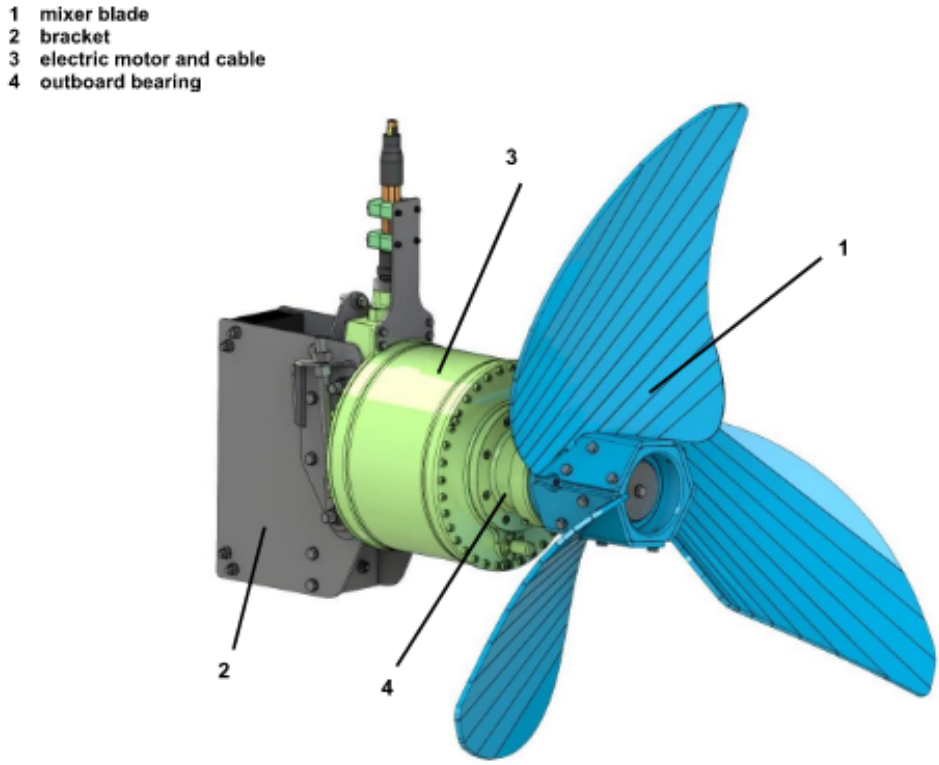

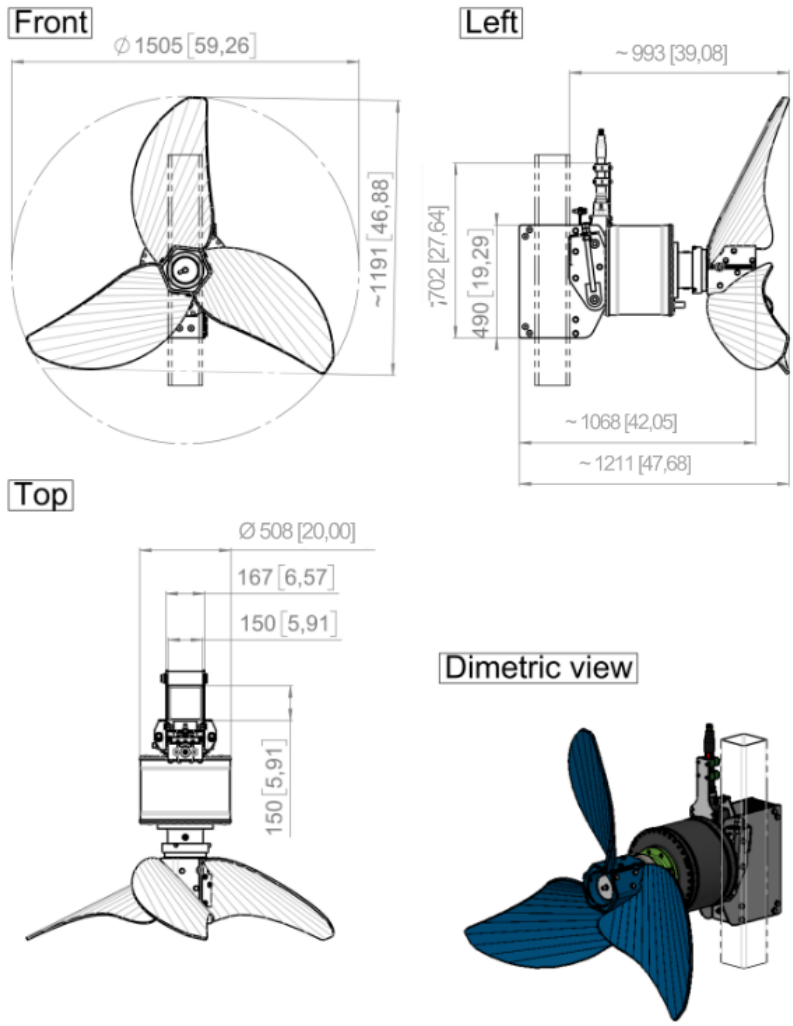

Process description	The Anaergia OmniMix PSM 1500 provides high efficiency mixing through its design with a Dynamic Mixer Controller (DMC) variable speed and torque control that adjusts to the medium. Its mixed blade design reduces friction losses in the flow and generates substantial thrust and circulation capacity relative to the electrical power utilized. The system also can draw conclusions regarding the physical properties of the mixing medium by leveraging the responses output to the user by the control system (depending on the interface design). Overall, the mixer has a robust and low-maintenance design. The mixer is guided on a square guide tube, and its operating height and mixing direction within a tank can be adjusted manually through a pivot & height adjustment element, and via a hydraulic motor. Power is switched on via the central plant control system or the automatic DMC and is controlled in manual or automatic mode.

Maintenance required	Maintenance tasks include:
	• Daily inspection
	  o Check for unnatural operating behavior (noises, vibration, etc.)
	• Annual maintenance tasks, maximum after 6,000 operating hours
	  o Check cable for defects, chafing, stretch marks, abrasion kinks
	  o Check pull rope for wear, contamination, and corrosion
	  o Check that threaded connections are tight
	  o Check submersible mixer for corrosion and leaks
	  o Motor bracket for wear
	  o Check power consumption, damage to motor
	  o Check the motor housing for contamination (cooling will be negatively affected)
	  o Check roller bearings for generation of noise
	  o Check rope for contamination and damage
	  o Check mixer blade for deformation, damage and wear
	  o Replace shaft seal and bushing; check mechanical seal
	• Maintenance tasks to be performed every two years, maximum after 12,000 operating hours
	  o Replace mechanical seal

Reference images	 **OmniMix Mixer & Service Box**

Reference images	 **Mixer Access via Service Box** **OmniMix installed on Fixed Roof**
Operation and maintenance impacts	
Power consumption	10kW/13.4hp (2.5 kW/3.35hp per digester)
Minimizes construction disruption	No difference than other mixing technologies. The mixer hatch must be constructed into the digester roof and the mixer installed once the cover is installed.
Reduces process complexity	The mixers can be adjusted to different positions for different purposes (i.e. positioned closer to the floor to resuspend grit) which adds operational complexity and flexibility. Mixers operate to achieve constant torque, so system can operate in variable conditions (i.e. 4% instead of 6% TS) in addition to being operated at different positions. The mixer can be used with fixed covers (most common) and also specially designed gas membrane covers (with mixer unit mounted at edge of cover.
Access	The mixer is guided on a square guide tube and can be accessed via the hatch on the digester roof without first needing to drain the digester. The digester liquid level is raised to provide a gas seal around the access hatch, which can then be opened to service the mixer with appropriate gas monitoring.

Other	Due to the roof hatch design, this mixing technology is not compatible with floating digester covers. Sole source mixing technology that must be coordinated with a typical cover provider (such as Ovivo or Westech).
O&M requirements	In addition to maintenance tasks described above, the mixer blades will need to be replaced approximately every 10 years and the mixer motor will need to be replaced approximately every 20 years.
Process flexibility	
Redundancy	Only one (1) mixer is needed per 0.65 MG digester, so no redundancy. However, equipment is easily accessible through hatch and can be accessed without needing to drain the digester.
Process capability	Achieves over 92% of digester contents mixed at a velocity above 4 in/s.
Process impacts	
Mixing Performance	Highest mixing performance compared to pumped mixing and LM mixing.
Central Kitsap Wastewater Treatment Plant impacts	
Space constraints	No additional footprint needed as OmniMix PSM is mounted in the digester and utilizes the cover space for access.
Minimizes process risks	Does not allow for full redundancy.
Control noise and odors	No significant noise with motor and mixer normally submerged.
Familiarity with technology	The OmniMix has not been used by CKTP staff before. It has a small number of installations in the United States.
Reduced technology risk	OmniMix PSM mixing technology is the newest technology of the those evaluated. Roughly 120 installs in North America since 2018.
Vendor Cost Quotation	
Anaergia	Price for four (4) OmniMix PSM 1500 mixers with accessories and four (4) service boxes (sized for one per 0.65 MG digester). Note that capital costs are dependent on the selected roof type due to the mounting platform design: • Membrane Roof: $1,082,410 • Fixed Roof: $850,176

Project Alternatives Workshop

Title	PR000848 Solids Upgrade - Digester Covers
Owner	County of Kitsap
Facility Name	Wastewater Reclamation Facilities
Location	Kitsap County, WA

7/24/2023

Attendees:

Graham, Dennis	Martin, Nick	Neal, Richard	Pickering, Matt	Sheridan, Chris
Cairns, Amara	Chapman, Matt	Koch, John	Parmenter, Adam	Staples, Andrew
Thompson, Luke	Tolentino Lauar, Mathe	Zahller, Jeff		

Criteria Pairwise Comparisions

Legend:

- ↑ is extremely more important than
- ↑ is much more important than
- ↗ is more important than
- → is as important as
- ↘ is less important than
- ↓ is much less important than
- ↓ is extremely less important than

Criteria No.		2	3	4	5	6	7
1	Community Impacts	↗	↓	↓	↓	↓	↘
2	Anticipates Potential Future Regulations		↓	→	↓	↓	↓
3	Operation and Maintenance Requirements			↑	→	→	↗
4	Resource Responsibility				↘	↓	→
5	Resilient System					↑	↗
6	Readily Implementable						↑
7	Non-Proprietary Equipment						

Criteria Weighting Summary

1	**Resilient System** Proven Technology, Reliable Equipment and process, Redundant Capacity, Minimal Equipment Downtime, Operational Flexibility, Optimizes use of available space and infrastructure	34%
2	**Readily Implementable** Standard Construction Methods, Minimal Operations Disruptions, Readily attainable permits, Short Design & Construction Period, No Long Lead Time Products	24%
3	**Operation and Maintenance Requirements** Leverages Automation, Operational Simplicity, Consistent with Current Operations, Improves working environment and safety, Improves performance of impacted processes	21%
4	**Non-Proprietary Equipment** Equipment is readily available and open source	7%
5	**Resource Responsibility** Energy Aware, Minimizes Chemical Consumption, Repurposing Existing Facilities, Non-Potable Availability, Reduced net GHG emissions	7%
6	**Community Impacts** Reduces Odor, Noise, Traffic, Visual impacts, Spills, Septage Hauler Accomodations	3%
7	**Anticipates Potential Future Regulations** Considers current best understanding of regulatory direction	3%

Project Alternatives

1	GAS HOLDING MEMBRANE WITH PUMPED MIXING	LARGER GAS STORAGE PROPERTIES. MORE REGULAR COVER REPLACEMENT AND EQUIPMENT MAINTENANCE. FLEXIBLE LIQUID LEVEL. EQUIPMENT LOCATED AT “GROUND” LEVEL. EASY TO MAINTAIN. TYPICAL PUMP/VALVE O&M, OPTIONS FOR
2	GAS HOLDING MEMBRANE WITH SUBMERSIBLE TURBINE MIXER	LARGER GAS STORAGE PROPERTIES. MORE REGULAR COVER REPLACEMENT AND EQUIPMENT MAINTENANCE. FLEXIBLE LIQUID LEVEL. NEW TECH.
3	FIXED COVER WITH PUMPED MIXING	SIMPLE DESIGN AND MAINTENANCE. ACCESS AND PROTECTIVE VALVING MOUNTED ON TOP. NO REAL GAS STORAGE. EQUIPMENT LOCATED AT “GROUND” LEVEL. EASY TO MAINTAIN. TYPICAL PUMP/VALVE O&M, OPTIONS FOR REDUNDANCY, HIGH HORSEPOWER
4	FIXED COVER WITH LINEAR MOTION MIXER	SIMPLE DESIGN AND MAINTENANCE. ACCESS AND PROTECTIVE VALVING MOUNTED ON TOP. NO REAL GAS STORAGE.
5	FIXED COVER WITH SUBMERSIBLE TURBINE MIXER	SIMPLE DESIGN AND MAINTENANCE. ACCESS AND PROTECTIVE VALVING MOUNTED ON TOP. NO REAL GAS STORAGE.
6	FLOATING COVER WITH PUMPED MIXING	
7	FLOATING COVER WITH LINEAR MOTION MIXER	

Alternative Scoring Detail

Legend

- ● Very Strong - 9
- ◕ Strong - 7
- ◑ Moderate - 5
- ◔ Low - 3
- ○ Very Low - 1

Criteria

		Community Impacts	Anticipates Potential Future Regulations	Operation and Maintenance Requirements	Resource Responsibility	Resilient System	Readily Implementable	Non-Proprietary Equipment			
1	GAS HOLDING MEMBRANE WITH PUMPED MIXING	◑	◕	●	◑	●	◑	◕			
2	GAS HOLDING MEMBRANE WITH SUBMERSIBLE TURBINE MIXER	◑	◕	◔	◕	◔	○	◔			
3	FIXED COVER WITH PUMPED MIXING	◑	◑	◕	◔	●	◕	◕			
4	FIXED COVER WITH LINEAR MOTION MIXER	◑	◑	◕	◔	◕	◕	◑			
5	FIXED COVER WITH SUBMERSIBLE TURBINE MIXER	◑	◑	◔	◔	◑	◕	◔			
6	FLOATING COVER WITH PUMPED MIXING	○	◔	◑	◔	◑	◑	◕			
7	FLOATING COVER WITH LINEAR MOTION MIXER	○	◔	◔	◔	◔	◑	◑			

Alternative Final Scores

	Alternative	Score	Capital Cost	Annual O&M	Net Present Value
1	GAS HOLDING MEMBRANE WITH PUMPED MIXING	74	$12,798,000		$18,946,000
3	FIXED COVER WITH PUMPED MIXING	73	$14,412,000		$20,140,000
4	FIXED COVER WITH LINEAR MOTION MIXER	65	$16,732,000		$21,787,000
6	FLOATING COVER WITH PUMPED MIXING	48	$16,451,000		$22,514,000
5	FIXED COVER WITH SUBMERSIBLE TURBINE MIXER	48	$15,016,000		$19,629,000
7	FLOATING COVER WITH LINEAR MOTION MIXER	36	$18,771,000		$24,697,000
2	GAS HOLDING MEMBRANE WITH SUBMERSIBLE TURBINE MIXER	30	$15,065,000		$20,739,000

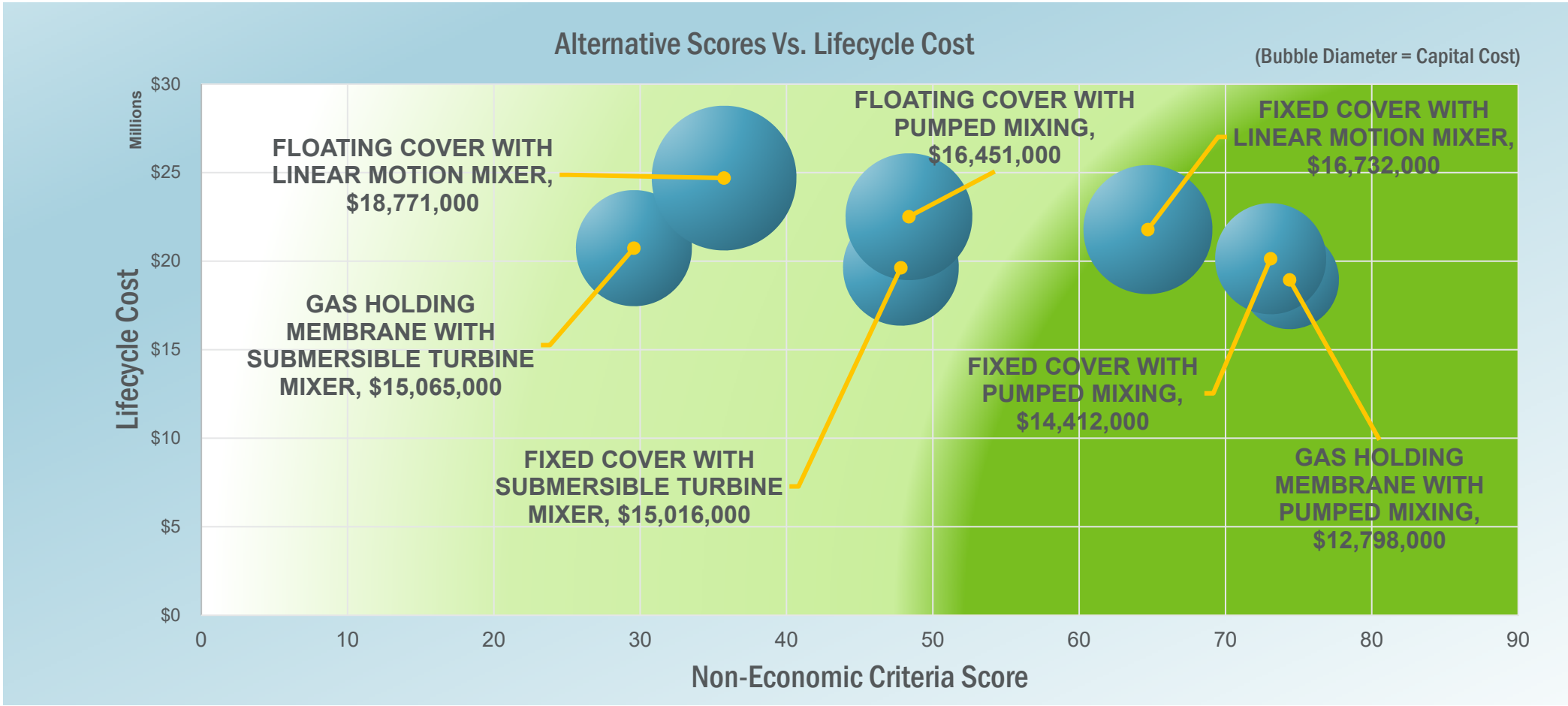
Alternative Scores Vs. Lifecycle Cost
(Bubble Diameter = Capital Cost)
Lifecycle Cost
Millions
$30
$25
$20
$15
$10
$5
$0
0
10
20
30
40
50
60
70
80
90
Non-Economic Criteria Score
FLOATING COVER WITH LINEAR MOTION MIXER, $18,771,000
GAS HOLDING MEMBRANE WITH SUBMERSIBLE TURBINE MIXER, $15,065,000
FLOATING COVER WITH PUMPED MIXING, $16,451,000
FIXED COVER WITH SUBMERSIBLE TURBINE MIXER, $15,016,000
FIXED COVER WITH LINEAR MOTION MIXER, $16,732,000
FIXED COVER WITH PUMPED MIXING, $14,412,000
GAS HOLDING MEMBRANE WITH PUMPED MIXING, $12,798,000

Project Alternatives Workshop

Title	PR000848 Solids Upgrade - Digester Configuration Options
Owner	County of Kitsap
Facility Name	Wastewater Reclamation Facilities
Location	Kitsap County, WA

7/24/2023

Attendees:

Graham, Dennis	Martin, Nick	Neal, Richard	Pickering, Matt	Sheridan, Chris
Cairns, Amara	Chapman, Matt	Koch, John	Parmenter, Adam	Staples, Andrew
Thompson, Luke	Tolentino Lauar, Mathe	Zahller, Jeff		

Criteria Pairwise Comparisions

Legend:

- ↑ is extremely more important than
- ↑ is much more important than
- ↗ is more important than
- → is as important as
- ↘ is less important than
- ↓ is much less important than
- ↓ is extremely less important than

Criteria No.		2	3	4	5	6	7
1	Community Impacts	↗	↓	↓	↓	↓	↘
2	Anticipates Potential Future Regulations		↓	→	↓	↓	↓
3	Operation and Maintenance Requirements			↑	→	→	↗
4	Resource Responsibility				↘	↓	→
5	Resilient System					↑	↗
6	Readily Implementable						↑
7	Non-Proprietary Equipment						

Criteria Weighting Summary

1	**Resilient System** Proven Technology, Reliable Equipment and process, Redundant Capacity, Minimal Equipment Downtime, Operational Flexibility, Optimizes use of available space and infrastructure	34%
2	**Readily Implementable** Standard Construction Methods, Minimal Operations Disruptions, Readily attainable permits, Short Design & Construction Period, No Long Lead Time Products	24%
3	**Operation and Maintenance Requirements** Leverages Automation, Operational Simplicity, Consistent with Current Operations, Improves working environment and safety, Improves performance of impacted processes	21%
4	**Non-Proprietary Equipment** Equipment is readily available and open source	7%
5	**Resource Responsibility** Energy Aware, Minimizes Chemical Consumption, Repurposing Existing Facilities, Non-Potable Availability, Reduced net GHG emissions	7%
6	**Community Impacts** Reduces Odor, Noise, Traffic, Visual impacts, Spills, Septage Hauler Accomodations	3%
7	**Anticipates Potential Future Regulations** Considers current best understanding of regulatory direction	3%

Project Alternatives

1	SINGLE 1.3 MG DIGESTER	Simple operation, potential <20 days in future with unit out of service, larger equipment
2	TWO 0.65 MG DIGESTERS	Flexibile operation modes, redundancy
3	DO NOTHING (EMERGENCY FIXES AND CAPACITY RISK)	Occurrence and need for mitigation of failures, on-going repair efforts, eventual re-construction

Alternative Scoring Detail

Legend

- ● Very Strong - 9
- ◕ Strong - 7
- ◑ Moderate - 5
- ◔ Low - 3
- ○ Very Low - 1

Criteria

		Community Impacts	Anticipates Potential Future Regulations	Operation and Maintenance Requirements	Resource Responsibility	Resilient System	Readily Implementable	Non-Proprietary Equipment			
1	SINGLE 1.3 MG DIGESTER	◑	◕	◕	◑	◑	◑	◑			
2	TWO 0.65 MG DIGESTERS	◑	●	◕	◑	●	◕	◑			
3	DO NOTHING (EMERGENCY FIXES AND CAPACITY RISK)	○	○	○	○	○	◕	◔			

Alternative Final Scores

	Alternative	Score	Capital Cost	Annual O&M	Net Present Value
2	TWO 0.65 MG DIGESTERS	74	$16,943,000		$22,479,000
1	SINGLE 1.3 MG DIGESTER	55	$11,610,000		$15,678,000
3	DO NOTHING (EMERGENCY FIXES AND CAPACITY RISK)	26	$8,489,000		$39,463,000

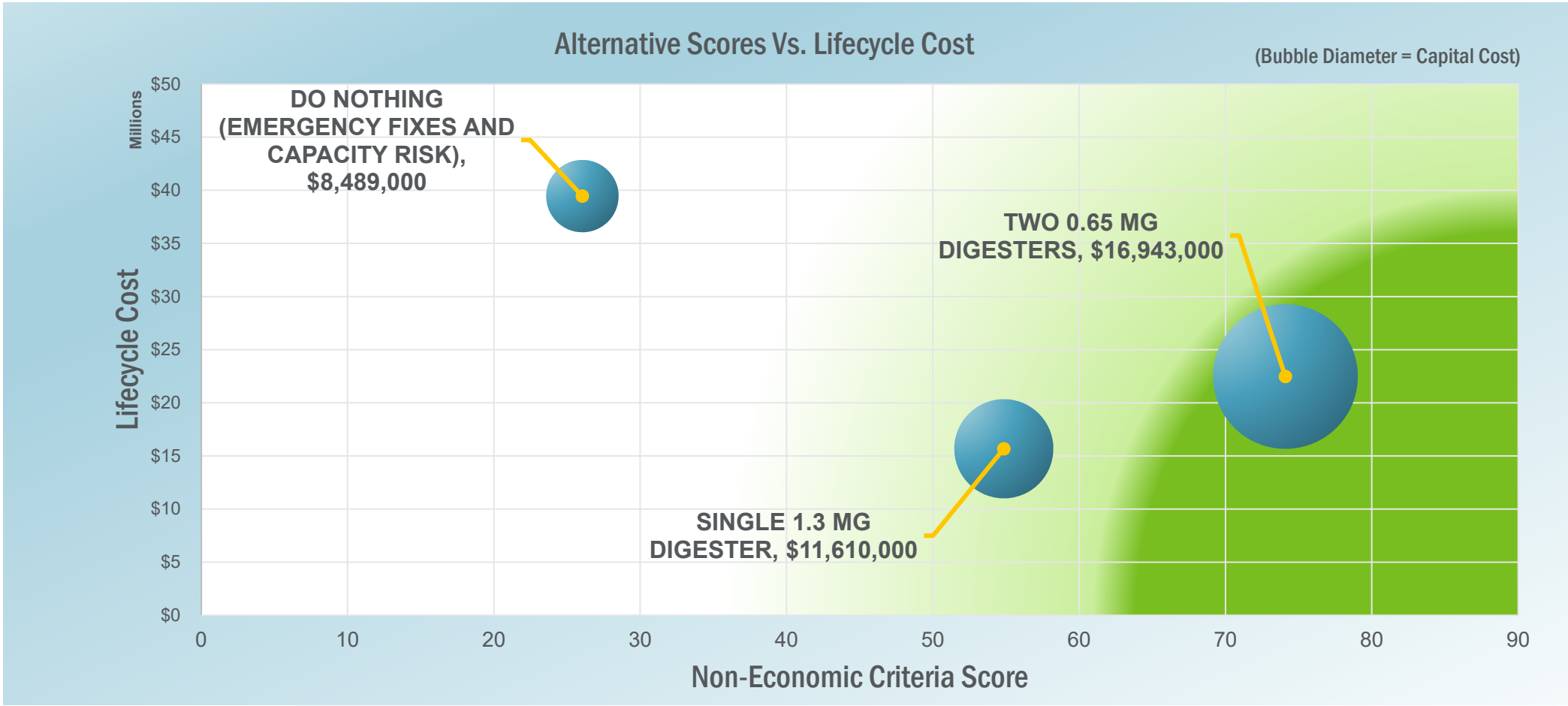
Alternative Scores Vs. Lifecycle Cost
(Bubble Diameter = Capital Cost)
Lifecycle Cost
Millions
$50
$45
$40
$35
$30
$25
$20
$15
$10
$5
$0
0
10
20
30
40
50
60
70
80
90
Non-Economic Criteria Score
DO NOTHING (EMERGENCY FIXES AND CAPACITY RISK), $8,489,000
TWO 0.65 MG DIGESTERS, $16,943,000
SINGLE 1.3 MG DIGESTER, $11,610,000

Project Alternatives Workshop

Title	PR000848 Solids Upgrade - Thickening Equipment
Owner	County of Kitsap
Facility Name	Wastewater Reclamation Facilities
Location	Kitsap County, WA

7/24/2023

Attendees:

Graham, Dennis	Martin, Nick	Neal, Richard	Pickering, Matt	Sheridan, Chris
Cairns, Amara	Chapman, Matt	Koch, John	Staples, Andrew	Thompson, Luke
Tolentino Lauar, Mathe	Zahller, Jeff			

Criteria Pairwise Comparisions

Legend:

- ↑ is extremely more important than
- ↑ is much more important than
- ↗ is more important than
- → is as important as
- ↘ is less important than
- ↓ is much less important than
- ↓ is extremely less important than

Criteria No.		2	3	4	5	6	7
1	Community Impacts	↗	↓	↓	↓	↓	↘
2	Anticipates Potential Future Regulations		↓	→	↓	↓	↓
3	Operation and Maintenance Requirements			↑	→	→	↗
4	Resource Responsibility				↘	↓	→
5	Resilient System					↑	↗
6	Readily Implementable						↑
7	Non-Proprietary Equipment						

Criteria Weighting Summary

1	**Resilient System** Proven Technology, Reliable Equipment and process, Redundant Capacity, Minimal Equipment Downtime, Operational Flexibility, Optimizes use of available space and infrastructure	34%
2	**Readily Implementable** Standard Construction Methods, Minimal Operations Disruptions, Readily attainable permits, Short Design & Construction Period, No Long Lead Time Products	24%
3	**Operation and Maintenance Requirements** Leverages Automation, Operational Simplicity, Consistent with Current Operations, Improves working environment and safety, Improves performance of impacted processes	21%
4	**Non-Proprietary Equipment** Equipment is readily available and open source	7%
5	**Resource Responsibility** Energy Aware, Minimizes Chemical Consumption, Repurposing Existing Facilities, Non-Potable Availability, Reduced net GHG emissions	7%
6	**Community Impacts** Reduces Odor, Noise, Traffic, Visual impacts, Spills, Septage Hauler Accomodations	3%
7	**Anticipates Potential Future Regulations** Considers current best understanding of regulatory direction	3%

Project Alternatives

1	RDT THICKENING (FKC) – 3 UNITS	SLOW SPEED, SIMPLE OPERATION WITH EASILY SERVICEABLE COMPONENTS. UNMANNED OPERATION. EXCELLENT INSTALLATION BASE, ALL FORMS OF SLUDGE (INCLUDING SEPTAGE).
2	RDT THICKENING (FKC) – 2 UNITS	SLOW SPEED, SIMPLE OPERATION WITH EASILY SERVICEABLE COMPONENTS. UNMANNED OPERATION. EXCELLENT INSTALLATION BASE, ALL FORMS OF SLUDGE (INCLUDING SEPTAGE). LIMITED TURNDOWN.
3	RDT THICKENING (HUBER) – 3 UNITS	SLOW SPEED, SIMPLE OPERATION WITH EASILY SERVICEABLE COMPONENTS. UNMANNED OPERATION. SIMILAR TECHNOLOGY TO CURRENT. LESS DIRECT EXPERIENCE WITH SEPTAGE.
4	RDT THICKENING (HUBER) – 2 UNITS	SLOW SPEED, SIMPLE OPERATION WITH EASILY SERVICEABLE COMPONENTS. UNMANNED OPERATION. SIMILAR TECHNOLOGY TO CURRENT. LESS DIRECT EXPERIENCE WITH SEPTAGE. LIMITED TURNDOWN.
5	CENTRIFUGE THICKENING (CENTRYSIS) – 2 SMALL UNITS	LOWER FOOTPRINT DESIGN. GOOD CAPTURE EFFICIENCY, LOW POLYMER USE. HIGH HORSEPOWER AND OPERATING SPEED. GENERALLY MANNED OPERATION. MINIMAL SEPTAGE HISTORY. MORE COMPLEX MAINTENANCE AND REBUILD.
6	CENTRIFUGE THICKENING (CENTRYSIS) – 2 LARGE UNITS	LOWER FOOTPRINT DESIGN. GOOD CAPTURE EFFICIENCY, LOW POLYMER USE. HIGH HORSEPOWER AND OPERATING SPEED. GENERALLY MANNED OPERATION. MINIMAL SEPTAGE HISTORY. MORE COMPLEX MAINTENANCE AND REBUILD. LIMITED

Alternative Scoring Detail

Legend

- ● Very Strong - 9
- ◕ Strong - 7
- ◑ Moderate - 5
- ◔ Low - 3
- ○ Very Low - 1

Criteria

		Community Impacts	Anticipates Potential Future Regulations	Operation and Maintenance Requirements	Resource Responsibility	Resilient System	Readily Implementable	Non-Proprietary Equipment			
1	RDT THICKENING (FKC) – 3 UNITS	◑	◑	◕	◕	◕	◕	◑			
2	RDT THICKENING (FKC) – 2 UNITS	◑	◑	●	◕	◑	◕	◑			
3	RDT THICKENING (HUBER) – 3 UNITS	◑	◑	◑	◕	◑	◑	◑			
4	RDT THICKENING (HUBER) – 2 UNITS	◑	◑	◕	◕	◔	◑	◑			
5	CENTRIFUGE THICKENING (CENTRYSIS) – 2 SMALL UNITS	◑	◑	○	◔	◔	◔	◑			
6	CENTRIFUGE THICKENING (CENTRYSIS) – 2 LARGE UNITS	◑	◑	○	◔	◔	◔	◑			

Alternative Final Scores

	Alternative	Score	Capital Cost	Annual O&M	Net Present Value
1	RDT THICKENING (FKC) – 3 UNITS	67	$5,855,000		$10,980,000
2	RDT THICKENING (FKC) – 2 UNITS	65	$5,024,000		$9,917,000
3	RDT THICKENING (HUBER) – 3 UNITS	51	$6,240,000		$11,907,000
4	RDT THICKENING (HUBER) – 2 UNITS	49	$5,447,000	$0	$10,811,000
6	CENTRIFUGE THICKENING (CENTRYSIS) – 2 LARGE UNITS	28	$7,865,000	$0	$14,569,000
5	CENTRIFUGE THICKENING (CENTRYSIS) – 2 SMALL UNITS	28	$6,050,000	$0	$11,427,000

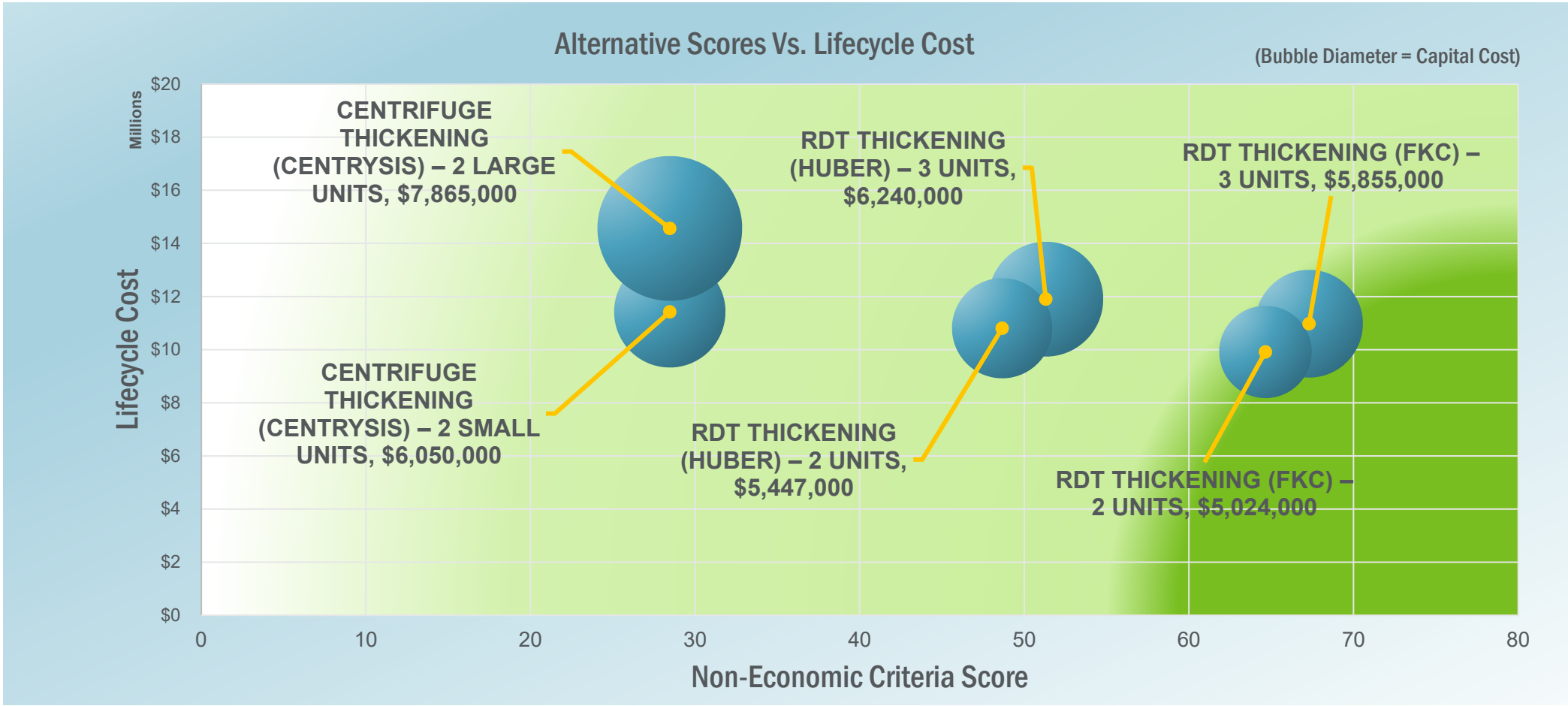
Alternative Scores Vs. Lifecycle Cost
(Bubble Diameter = Capital Cost)
Lifecycle Cost
Millions
$20
$18
$16
$14
$12
$10
$8
$6
$4
$2
$0
0
10
20
30
40
50
60
70
80
Non-Economic Criteria Score
CENTRIFUGE THICKENING (CENTRYSIS) – 2 LARGE UNITS, $7,865,000
CENTRIFUGE THICKENING (CENTRYSIS) – 2 SMALL UNITS, $6,050,000
RDT THICKENING (HUBER) – 3 UNITS, $6,240,000
RDT THICKENING (HUBER) – 2 UNITS, $5,447,000
RDT THICKENING (FKC) – 3 UNITS, $5,855,000
RDT THICKENING (FKC) – 2 UNITS, $5,024,000

Appendix C. Septage and FOG Workshop Summary

CENTRAL KITSAP TREATMENT PLANT (CKTP)
PLANT SOLIDS AND LIQUID HAULED WASTE UPGRADES
WORKSHOP 6: SEPTAGE AND FOG EQUIPMENT – 08/23/2023

MEETING MINUTES

ATTENDEES:

CKTP STAFF:

- Chris Sheridan, Utility Operations Manager
- Nick Martin, Construction Manager
- Rich Neal, Operations Lead
- Randy Bolton
- Nate, Instrumentation
- John Yates, Facilities Manager
- Matt Pickering, Lab Manager
- Floyd Bayless, Construction Manager
- Dennis Graham, Maintenance
- Chris W, Maintenance

HDR STAFF:

- Jeff Zahller
- Jarrett Moran
- Andrew Staples
- John Koch
- Matt Chapman
- Luke Thompson
- Amara Cairns
- Matheus Tolentino Lauar

DISCUSSION:

- INTENT OF WORKSHOP IS TO DEVELOP SEPTAGE, FOG, AND ODOR CONTROL RECOMMENDATIONS
- RECAP FROM PREVISOUS WORKSHOP ON DIGESTER AND THICKENING EQUIPMENT
    - RECAP OF CRITERIA WEIGHTING FOR PAIRWISE ANALYSIS
    - NATURAL GAS/CASCADE PROPOSAL STILL NEEDS RESOLUTION

1. **SEPTAGE TREATMENT**
    a. **GENERAL:**

- SEPTAGE EQUIPMENT IS RELATIVELY COMMON AMONG VENDORS AND ALL PACKAGE SYSTEMS WILL INCLUDE SCREENING, GRIT REMOVAL, AND RESIDUAL GREASE SKIMMING.
- ALL SEPTAGE OPTIONS WILL INCLUDE TWO CUSTOMED ENGINEERED FEATURES:
    - EQUALIZATION TANK WITH MIXING AND PUMPING (AS DETERMINED IN PREVIOUS WORKSHOPS).
    - UPSTREAM ROCK VAULT – DICUSSION DURING THE WORKSHOP SUGGESTED WE NEED A WAY TO COLLECT ROCKS AND SCREENINGS IN A LARGE (1-2 INCH) BAR SCREEN PROTECTED BOX. DOWNSTREAM OF THIS WILL BE THE INFLUENT TO THE SEPTAGE EQUIPMENT. UPSTREAM WILL BE REQUIRED TO BE CLEANED BY HAULERS AND WILL PROTECT CKTP SYSTEMS FROM PRESSURIZED DISCHARGES THAT CLOG THE CURRENT LAKESIDE UNIT.
- REVIEW OF THREE VENDORS (VEOLIA, LAKESIDE, HUBER) VIA PAIRWISE LED TO INITIAL SELECTION OF LAKESIDE AS BASIS OF DESIGN, WITH HUBER AS AN ALTERNATIVE THAT SHOULD BE CONSIDERED ONCE CONTRACTOR IS ONBOARD AND CAN PROVIDE INSIGHTS INTO PRICING.
- KITSAP WOULD LIKE US TO CONFIRM LEAD TIMES FOR HUBER VS LAKESIDE AND TO VERIFY THAT PLC (COMPACT LOGIX) AND PROGRAM (STUDIO 5000) ARE OPEN SOURCE AND COMPATIBLE WITH KITSAP STANDARDS.
- OTHER KEY FEATURES:
    - FLOW NEEDS TO BE METERED FROM EACH TRUCK.
    - FULLY REDUNDANT DUAL TREATMENT TRAINS.
    - KEYCARD SYSTEM SO TRUCK, TIME, VOLUME, ARE ALL KNOW AND CAN BE CORRELATED TO PH READING, ETC. BILLING AND INVOICE AT THE STATION ARE NOT NEEDED.
        - NO PROPRIETARY TYPE OF KEYCARD SYSTEM IS PREFERRED.
    - IF AT ALL POSSIBLE, WANT THE SYSTEM TO BE GRAVITY FED TO MINIMIZE PUMPING.
    - AN EMERGENCY BYPASS PIPE WILL BE INLUDED THAT WILL ALLOW SEPTAGE TO BE ROUTED TO THE HEADWORKS. HOWEVER, THIS WILL ONLY INCLUDE A BYPASS LINE TO A VAULT WITH A CONNECTION FOR A PORTABLE PUMP. TO BE USED ONLY IN AN EMERGENCY.
- **DECISION: PROCEED WITH LAKESIDE AS BASIS OF DESIGN, WITH DESIGN OF UPSTRAM ROCK/SCREEN VAULT AND DOWNSTREAM EQUALIZATION. INCLUDING EMERGENCY BYPASS LINE/VAULT.**
- **ACTION ITEMS:**
    - **CONFIRM LEAD TIMES ON HUBER AND LAKESIDE EQUIPMENT**
    - **CONFIRM CONTROLS OPTIONS, PLC, AND PROGRAMING FLEXIBILITY WITH HUBER AND LAKESIDE**

2. FOG TREATMENT

a. GENERAL:

- FOG HANDLING AND TREATMENT OPTIONS CAN VARY SIGNIFICANTLY:
    - TREATMENT ALL THE WAY TO A MARKETABLE PRODUCT (BIOFUEL SOURCE) OR SIMPLE SCREENING/MACERATION PRIOR TO HEATING AND FEEDING TO DIGESTER.

        - SCREENING FOR FOG IS DESIRED, AS HAULING TRUCKS USED FOR FOG ARE THE SAME AS USED FOR SEPTAGE AND THERE MAY BE RAGS AND OTHER SOLIDS ON FOG HAULS.
    - REVIEWED FOUR OPTIONS:
        - GREASEZILLA – FULL TREATMENT PACKAGE THAT TAKES MATERIAL FROM RAW FOG TO A BIOFUEL PRECURSOR. VENDOR HAS INDICATED HIGH ROI AND THE POTENTIAL TO PROVIDE BOTH THE EQUIPMENT AND THE INSTALLATION FOR FREE, WITH A GUARANTEE OF PRODUCT PURCHASE.
        - LAKESIDE MODIFIED SCREEN (HOT WATER) FOR FOG.
        - 'BEAST' SCREEN SYSTEM DESIGNED FOR FOG.
        - CUSTOM ENGINEERED SYSTEM USING INLINE MACERATION FOLLOWED BY HEATING/MIXING AND PUMPING TO THE DIGESTERS.
    - GREASEZILLA HAS DEFINITE POTENTIAL FOR CKTP AND IS A TESTED SYSTEM THROUGH OTHER PLANTS (SUCH AS HRSD IN VIRGINIA). HOWEVER, NEED TO VET SPECIFIC FLOWS AND POTENTIAL PAYBACK AND DETAILS WITH THE VENDOR.
    - LEAVING GREASEZILLA ASIDE, PAIRWISE ANALYSIS SUGGESED THE 'BEAST' UNIT WAS LIKELY THE BEST OPTION TO PROCEED WITH FOR DESIGN. THE SCREEN IS WELL TESTED WITH FOG AND CAN HANDLE SIGNIFICANT RAGS AND ROCKS IF NEEDED. IT ALSO SERVES AS A PRECURSOR TO THE GREASEZILLA SYSTEM AT HRSD AND CONSEQUENLTY HAS POTENTIAL TO EXPAND IN THAT DIRECTION AS NEEDED. THE UNIT ALSO SEEMS TO OPEN UP THE POSSIBILTY TO USE IT FOR OFFLOADING GREASE FROM VACTOR TRUCKS USED BY COUNTY TO CLEAN WET WELLS.
    - MACERATION WAS NOT THE PREFERRED APPROACH AND SO THE ENGINEERED SOLUTION RANKED A BIT LOWER.
    - WANT METERED OFFLOADING SIMILAR TO SEPTAGE.
    - **DECISION: PROCEED WITH BEAST UNIT AS BASIS OF DESIGN, WITH HEATING/MIXING PRIOR TO PUMPING TO DIGESTER. MAY NEED A BUILDING FOR A PORTION OF THE EQUIPMENT.**
    - **ACTION ITEMS:**
        - **CONFIRM ADDITIONAL QUESTIONS AND CKTP FLOW RATES WITH GREASEZILLA**

3. ODOR CONTROL, CENTRATE, SITE LAYOUT

a. ODOR CONTROL:

- HAD TIME TO REVIEW GENERAL PROS/CONS OF CARBON SCRUBBER SYSTEMS AND INORGANIC BIOFILTERS.
- NEED SYSTEMS FOR H2S DOMINANT FLOWS (THICKENING/FOG/SEPTAGE) VERSUS CENTRATE STORAGE (AMMONIA)
- BIOFILTERS TEND TO BE MORE EXPENSIVE UP FRONT, BUT HAVE GOOD LIFE CYCLE COST PROPERTIES AND TEND TO HAVE LONGER (10-15 YEAR) MEDIA LIFE
- CARBON LESS EXPENSIVE CAPITAL COST, NO WATER USE, BUT CAN INVOLVE MORE CARBON CHANGEOUTS
- COUNTY HAS INORGANIC BIOFILTER (BOHN) AND CARBON SYSTEMS.
- PAIRWISE ON H2S SYSTEMS SUGGESTED SLIGHT PREFERENCE FOR BIOFILTER.

- **<u>DECISION:</u> PROCEED WITH INORGANIC BIOFILTER AS BASIS OF DESIGN FOR PROJECT.**

b. CENTRATE:

- REVIEWED TWO OPTIONS FOR CENTRATE STORAGE USING GRAVITY FILTER.
    - OPTION 1 WOULD UTILIZE EXISTING CENTRATE AND SEPTAGE SUMPS TO GET CENTRATE TO THE THICKENER, THEN A NEW LINE TO GRAVITY IT BACK TO THE WET WELL. THEN BACK TO THE FRONT OF THE PLANT.
    - OPTION 2 WOULD UTILIZE THE NEW IN PLANT PUMP STATION FOR CENTRATE RECIRCULATION WHILE LEAVING THE EXISTING PATHWAY IN PLACE.
- REVIEW WITH STAFF INDICATED THAT OPTION 2 WAS PREFERRED.
- **<u>DECISION:</u> PROCEED WITH OPTION 2 AS BASIS OF DESIGN FOR PROJECT.**

c. SITE LAYOUT:

- SHORT REVIEW AT END OF WORKSHOP ON FOUR POTENTIAL OPTIONS FOR ARRANGING THE FACILITIES ONSITE.
- STAFF NOTED THE FOLLOWING COMMENTS:
    - BUILDING NEW DIGESTERS INTO THE EAST SLOPE OF THE SOLIDS AREA SEEMED TO BE A GOOD PLACEMENT.
    - AVOID BUILDINGS DIRECTLY SOUTH OF THE PROCESS BUILDING AS IT CA INTERFERE WITH SOLIDS TRUCKS.
    - THE THICKEING BUILDINGS DIRECTLY SOUTH OF EXISTING DIGESTERS AND WEST OF GENERATOR SEEMED TO BE A GOOD PLACEMENT.
    - SEPTAGE AND FOG WILL NEED TO LIKELY BE BUILT INTO THE SLOPE OF EITHER THE LOWER LEVEL (WEST SIDE OF EAST PLANT ROAD) OR INTO THE SLOPE UP TO THE NEW PROPERTY (EAST SIDE OF EAST PLANT ROAD)
- **<u>DECISION:</u> CONTINUE DEVELOPMENT OF LAYOUTS WITH FEEDBACK FROM ABOVE.**

Greasezilla[SM] FOG Receiving and Separation Center	
General Description	• Patented separation technology treats FOG by circulating a hydronic thermal process through the grease, which promotes stratification and separation to develop biofuel (brown grease) with a moisture content of less than 1 percent. Pasteurized water drains back into the plant stream and the "batter" can be fed into anaerobic digestion.
Technology	• HSS 20K-2-M Dual Reactor / Boiler & Control System.

Vendor Layouts:

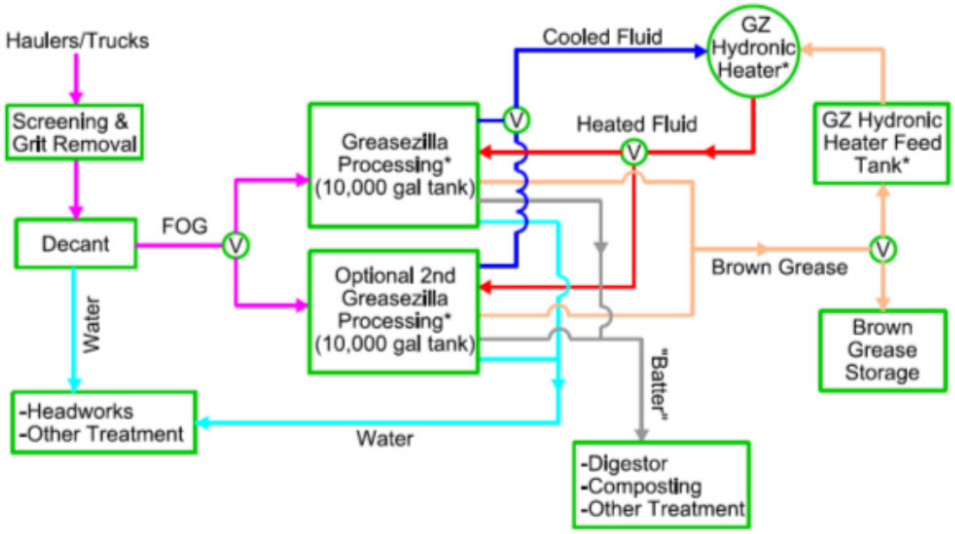

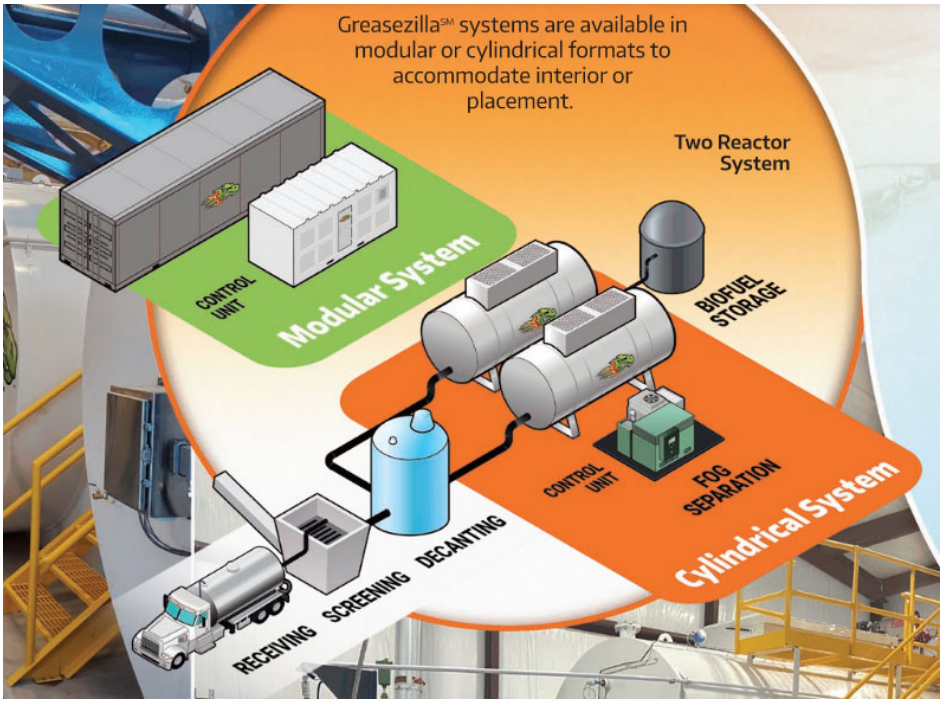

Vendor Layouts:

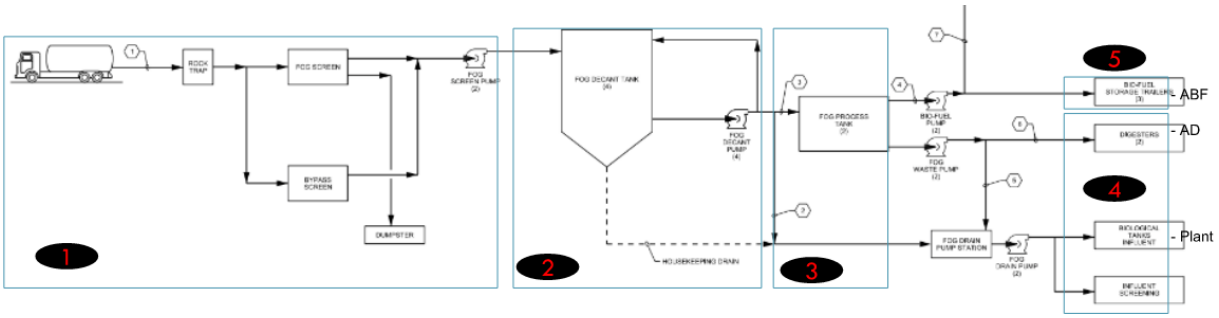

FOG Processing Center Stages

1. Receiving & Screening
2. Decant Separation
3. FOG Separation
4. Advanced Biofuel & Effluent Discharge
5. Advanced Biofuel (Greasezilla® Fuel) Offtake Storage for Sale

Process Description	FOG receiving, screening, decanting, and a patented and self-contained system of mechanical separation, thermal treatment, and advanced filtration to convert FOG into recyclable biofuel (brown grease). The hydronic thermal separating process removes 98-99% of the water and utilizes 5% of the biofuel produced to run the heating process.

Reference Images	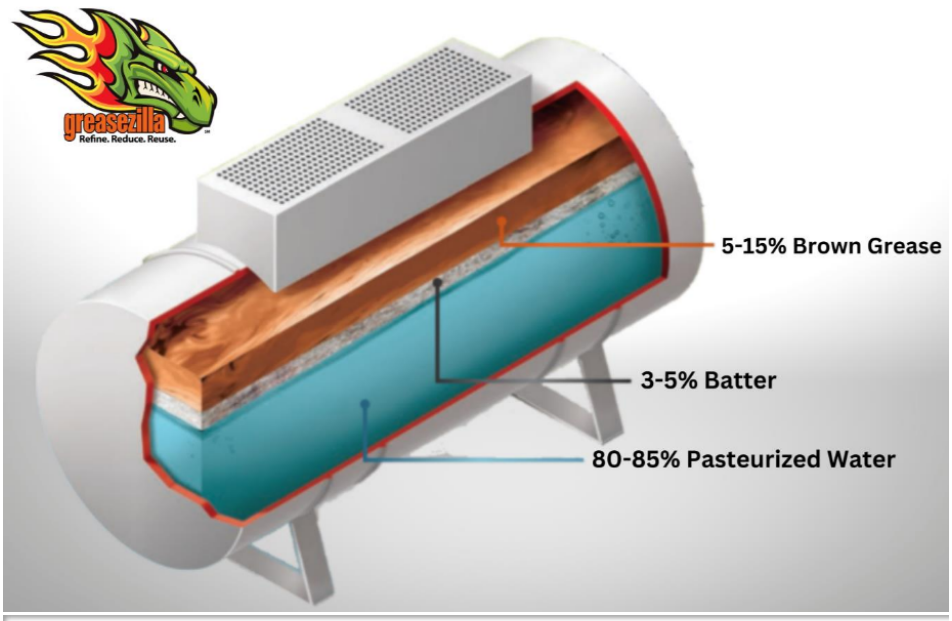 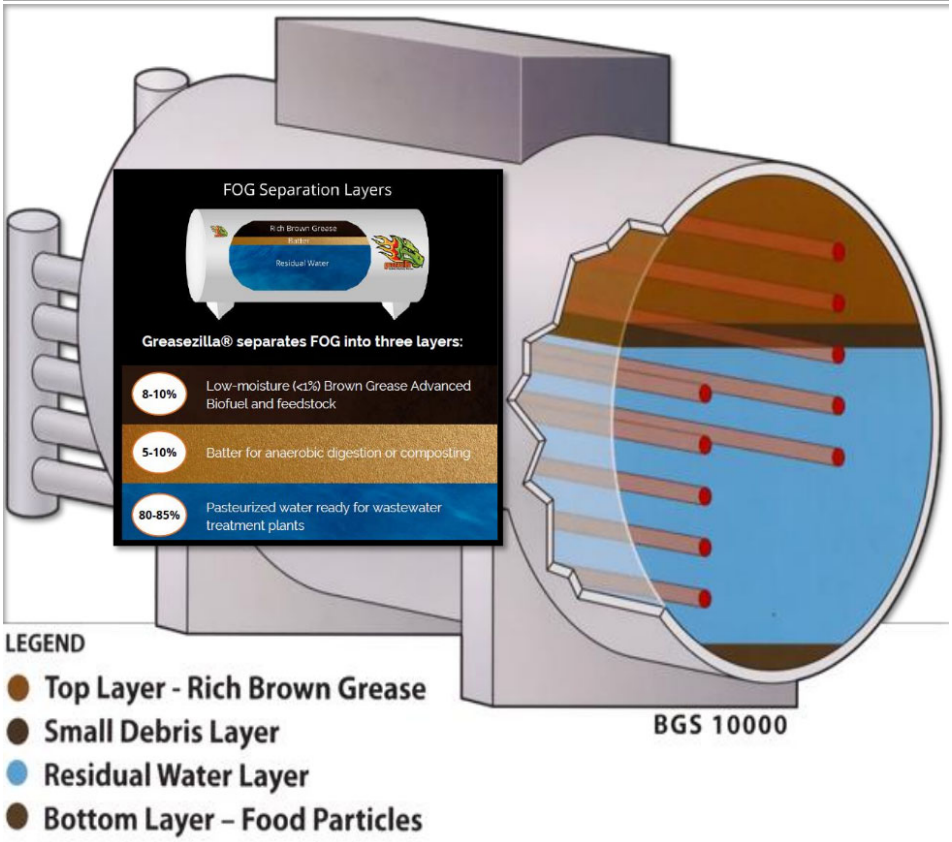

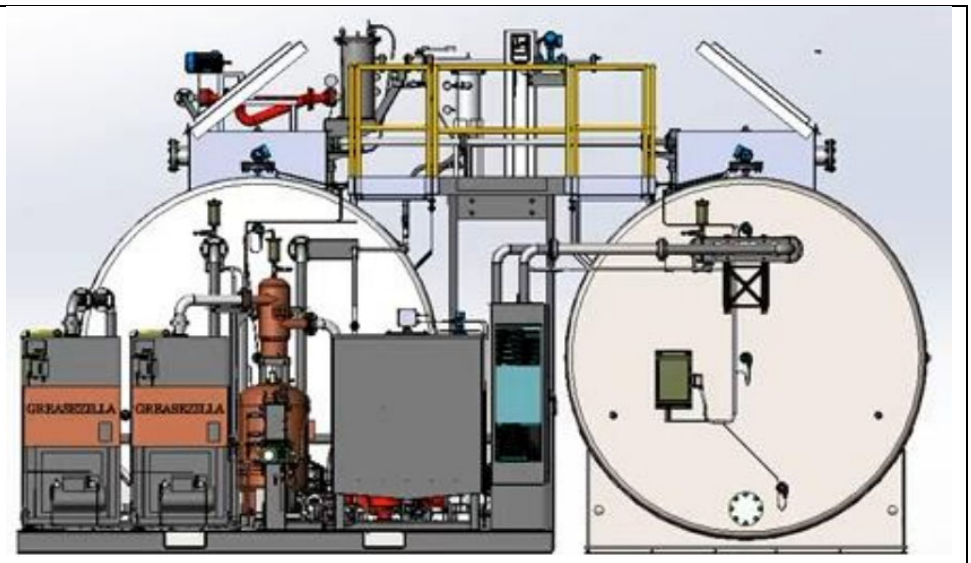

Cylindrical **Stationary** Format Interior Placement

Enclosed Format **Moveable** Interior, Exterior Placement, Export

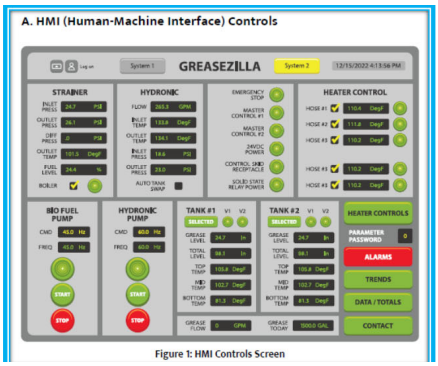

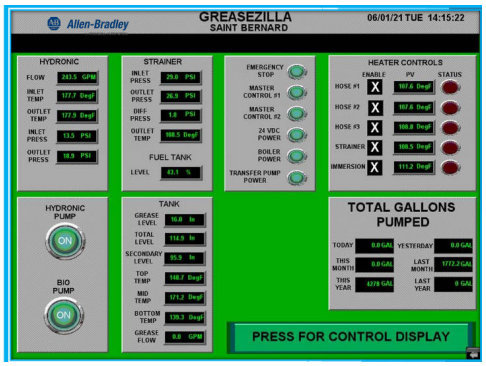

Operation and Maintenance Impacts	
Power Consumption	240V, single phase (480V, three phase is available).
Minimizes Construction Disruption	There are no significant differences in construction disruption between the proposed technologies.
Reduces Process Complexity	Operationally, this is a highly automated system w/ no chemical additions, etc. The technology is approximately 10 years old with a patented process.
Access	Packaged system incorporates access to necessary components.
O&M Requirements	Automated, low maintenance; but more operational components compared to other options. Daily Boiler & Boiler Feed System Maintenance, Daily Offtake Pumping System Maintenance, Daily General System Maintenance.
Process flexibility	
Redundancy	None. Ability to bypass to decant tank / wet well.
Process Capability	Minimum Flow: None Maximum Flow: 400 GPD
Process impacts	
Biogas Production	Lose the ability to feed majority of volume of FOG to digester (still able to feed "Batter" and more concentrated FOG to digesters).
Central Kitsap Wastewater Treatment Plant impacts	
Space Constraints	Dependent upon cylindrical stationary or enclosed moveable format. Each option less than 1,000 SF and can be installed indoors or outdoors.
Minimizes Risks	Greasezilla^{SM} has been in business for 10 years and has a U.S. Patent for brown grease separation. Technology currently in use by large Virginia utility; Hampton Roads Sanitation District (HRSD).
Control Noise and Odors	Noise: Minimal Odor: Enclosed equipment that can be connected to odor control equipment
Familiarity with Technology	Unfamiliar; but not new technology for FOG treatment.
Reduced Technology Risk	Approximately 25 installations in the United States.
Vendor Cost Quotations	
Greasezilla^{SM}	• Greasezilla^{SM} HSS 20K-2-M: $1,285,000
	• Greasezilla^{SM} Screening System w/ Screw: $150,000 • 20,000 Gal Decant Tank w/ Progressive Cavity Pump: $130,000

SAVI (formally Enviro-Care) BEAST Septage Receiving Station	
General Description	• Specially designed screening and separation unit specifically intended for FOG.
Technology	• SAVI Beast Septage Receiving Station Model VFA- 1200-DM.

Vendor Layouts:

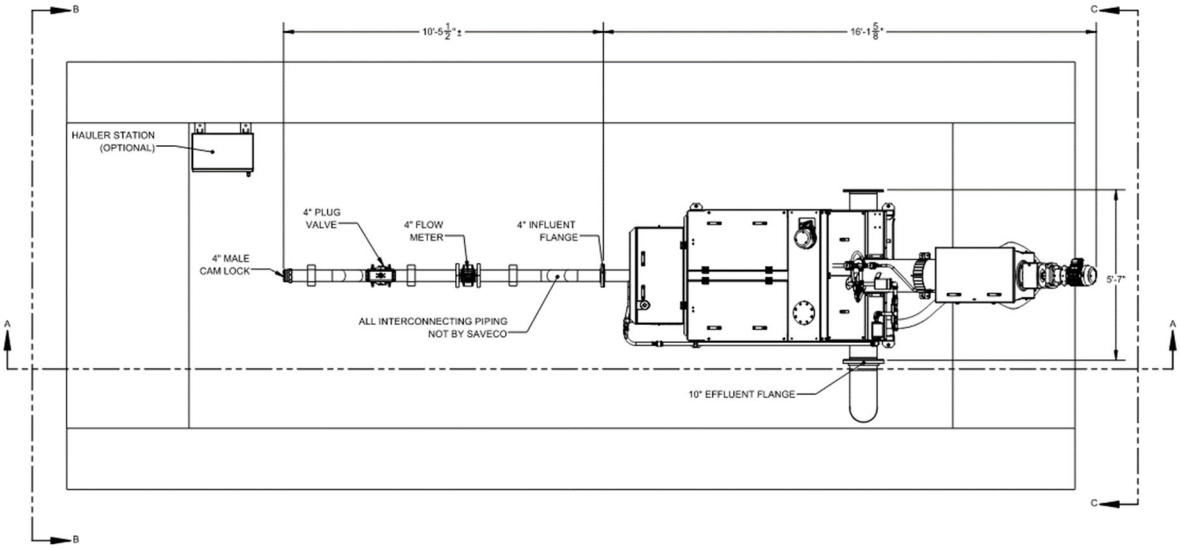

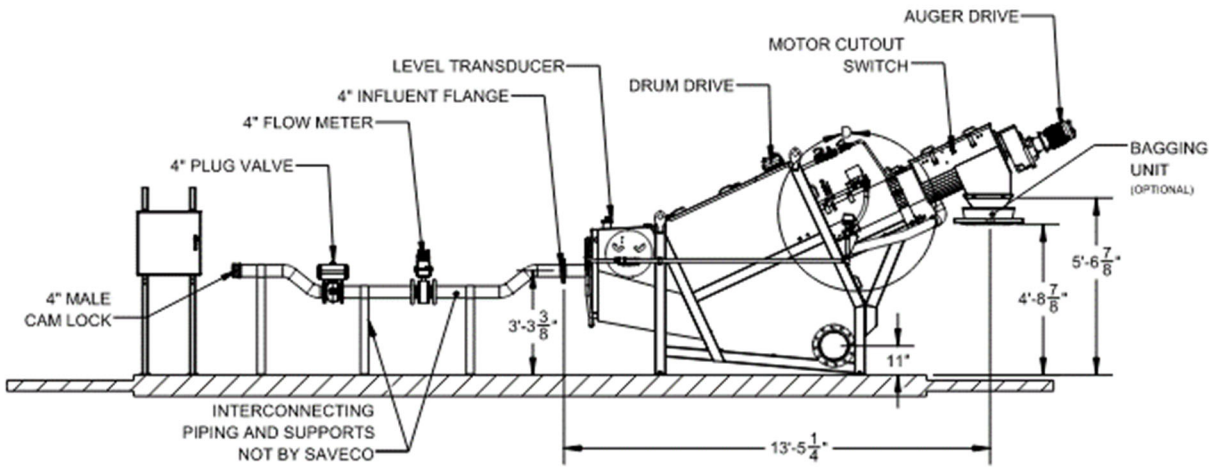

Vendor Layouts:

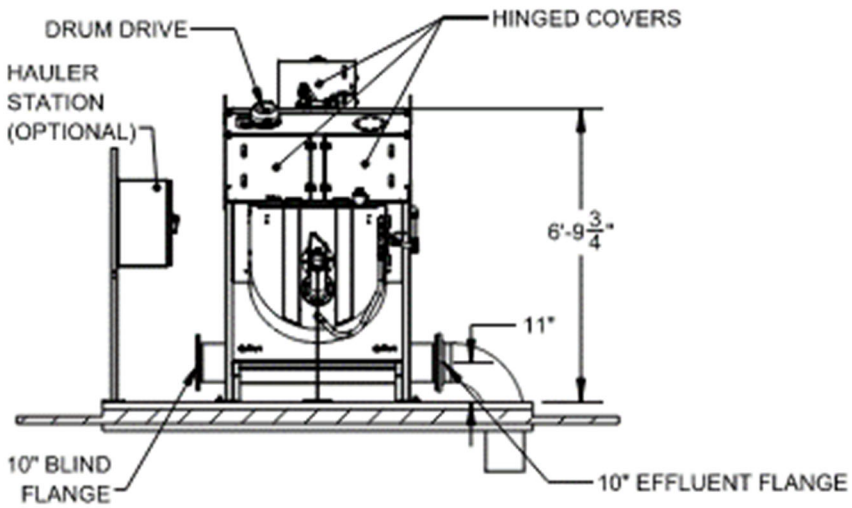

Process Description	The SAVI Beast Septage Receiving Station receives FOG through the inlet pipe and flows through a plug valve, magnetic flow meter, and into a 6 mm screen. The unit contains a unique two-stage tank design with curved and sloped inlet promotes debris sedimentation. The screen is supported at the drive, eliminating support arms and minimizing the potential for ragging problems. Dual drive system (screen basket and auger operate independently) allows for the speed of the auger to be increased to provide faster debris removal and the speed of the screen basket to be decreased to improve capture efficiency. The BEAST unit eliminates the need for in-line grinders or rock traps.

Reference Images	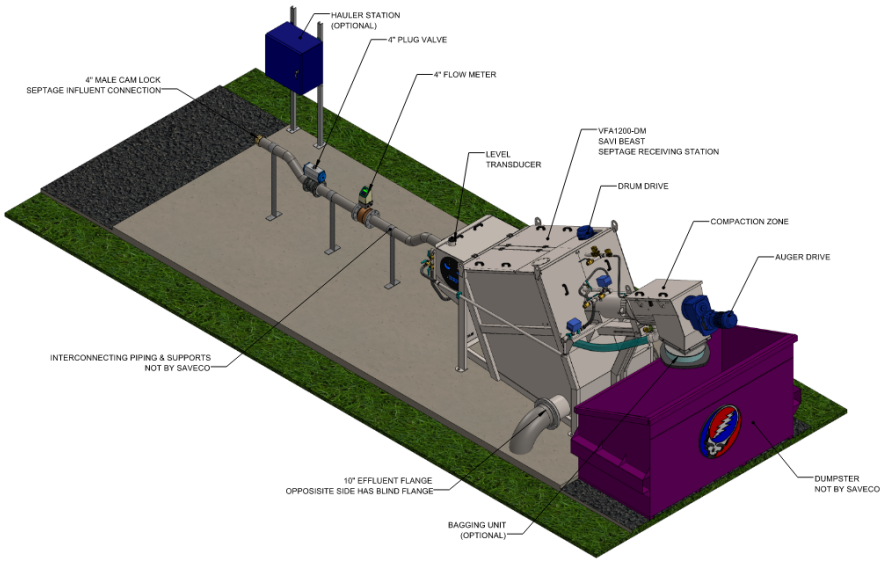 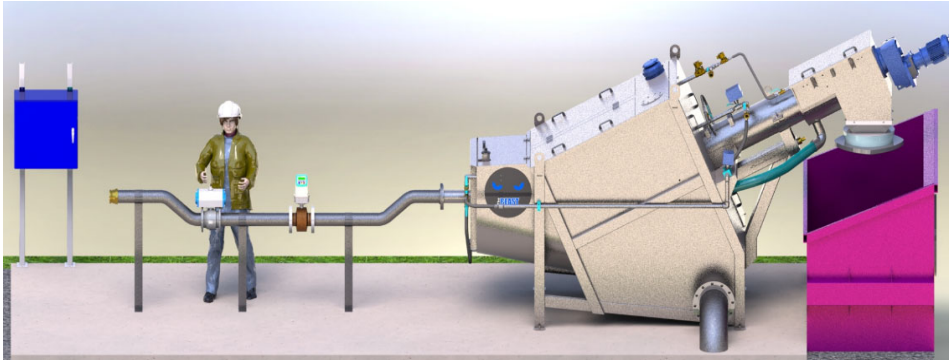
Operation and Maintenance Impacts	
Power Consumption	Drum Screen Motor: 2 HP / Shafted Screw Motor: 2 HP
Minimizes Construction Disruption	There are no significant differences in construction disruption between the proposed technologies.
Reduces Process Complexity	Operationally, all proposed alternatives have similar process complexity.
Access	No issues with access.
O&M requirements	Similar to septage screening systems (Lakeside Raptor, etc.).
Process Flexibility	
Redundancy	None
Process Capability	Minimum Flow: None Maximum Flow: 660 GPD
Process impacts	
None	

Central Kitsap Wastewater Treatment Plant impacts	
Space Constraints	26’ L X 8’ H x 6’ W
Minimizes Risks	300 installations worldwide.
Control Noise and Odors	Noise: Minimal Odor: Enclosed equipment that can be connected to odor control equipment
Familiarity with Technology	Screening system similar to current Lakeside unit.
Reduced Technology Risk	Commonly used packaged system, similar to other vendors.
Vendor Cost Quotations	
SAVI	• SAVI Beast Septage Receiving Station Model VFA- 1200-DM: $239,000 Options: o Beast Unit local electricals to be suitable for a Class I, Division 1, Group D hazardous area: $2,600 o Beast Unit Outdoor Freeze Protection: $13,300 o Discharge Bagging Device: $2,000 o Hauler Station, Flow Meter and Flo-Logic Software Package: 47,900 o Base Station including Flow Meter and Inlet Gate Valve (price includes deduct for pinch valve and Item A-4 flow meter): $45,700 o Hauler Remote Indication Station: $2,650

Veolia SEPRAPAC®	
General description	• Fully automated pre-engineered unit that includes receiving, screening, grit removal, and FOG removal (residual FOG), automatic billing, and various instrumentation/monitoring.
Technology	• SEPRAPAC® SCS (Septage Combined System) • SEPRAPAC® SRS (Septage Screen Only)

Vendor Layouts:

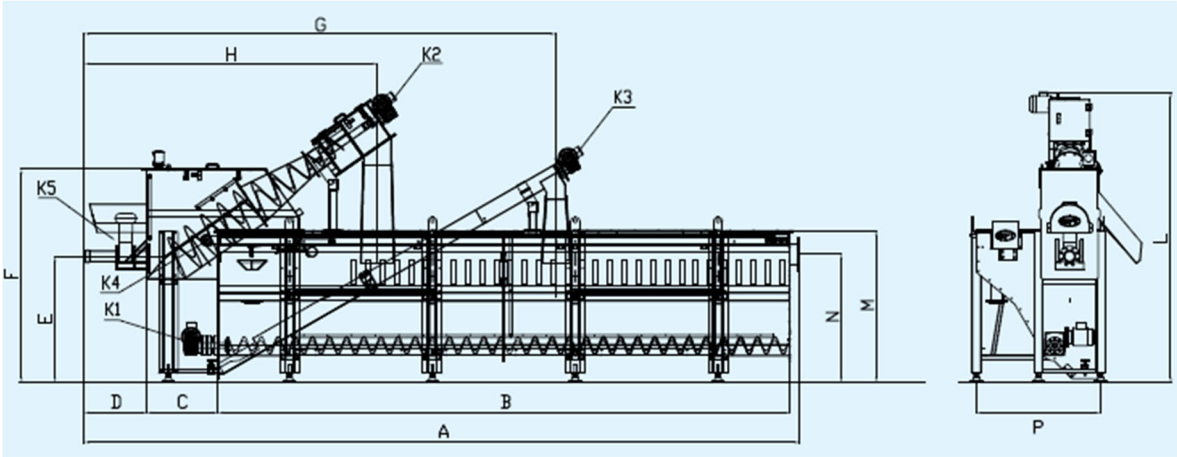

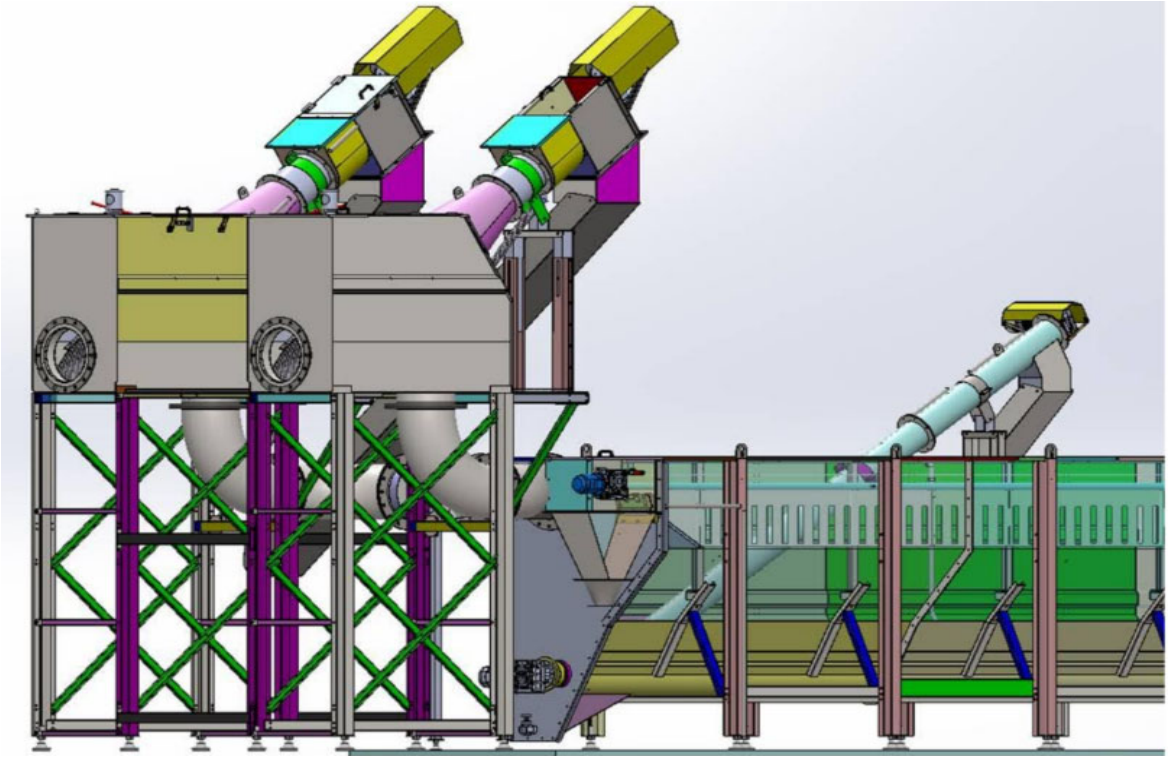

Vendor Layouts:

Process Description	The Veolia septage receiving station receives flow through the inlet connection, custom-engineered rock trap, knife slide gate, magnetic flow meter, electric actuator and plug valve, and into a shaftless spiral screen with 6 mm perforations. The unit includes a compaction zone for screenings dewatering and volume reduction (up to 40% solids) and is capable of handling 2 to 3% solids concentration. Unit provides grit removal (up to 95%, >70 mesh). The unit can include additional spray wash for higher organics removal (up to 75% solids washing efficiency). The unit can include a Cancoppas billing system with access key reader: • User identifies him/herself with ID number or ID card. • The billing can be set per discharge or per volume, as required. • The payment can be made from a prepaid account linked to the ID card. • A physical receipt printer is available as an option, or the invoice can be sent by email (or both). Instrumentation (pH, TSS, Conductivity, etc.). Allows pre-sampling to accept or reject loads.

Reference Images	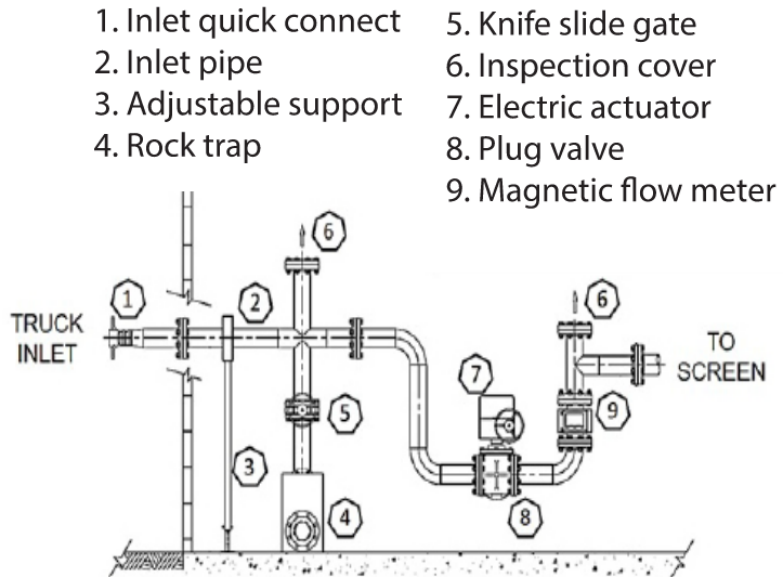 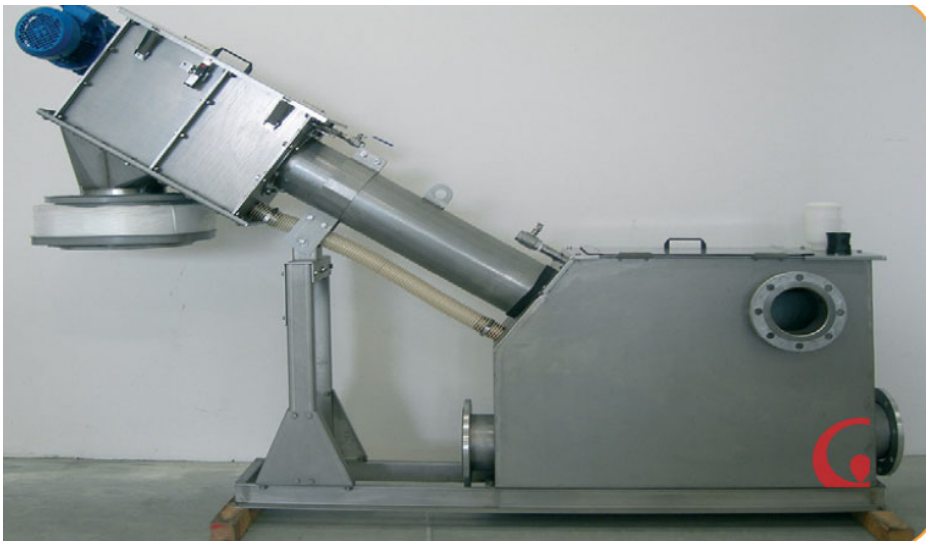

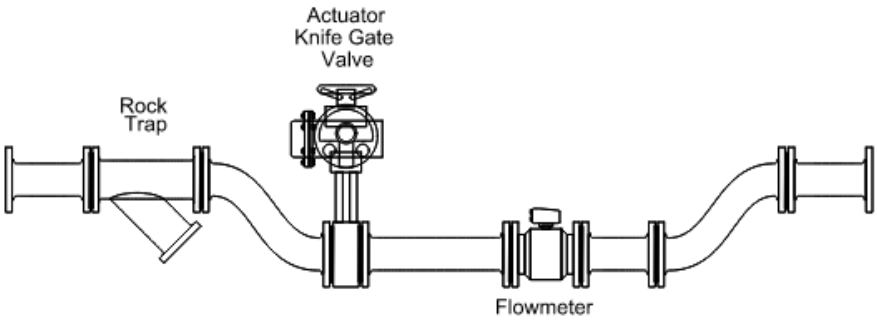
Actuator
Knife Gate
Valve
Rock
Trap
Flowmeter

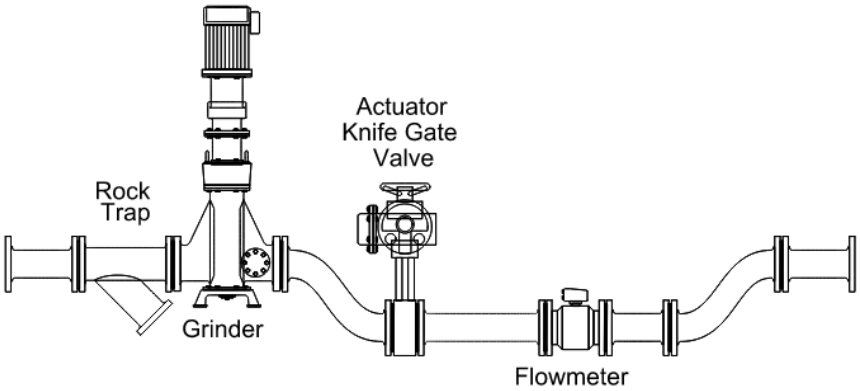
Actuator
Knife Gate
Valve
Rock
Trap
Grinder
Flowmeter

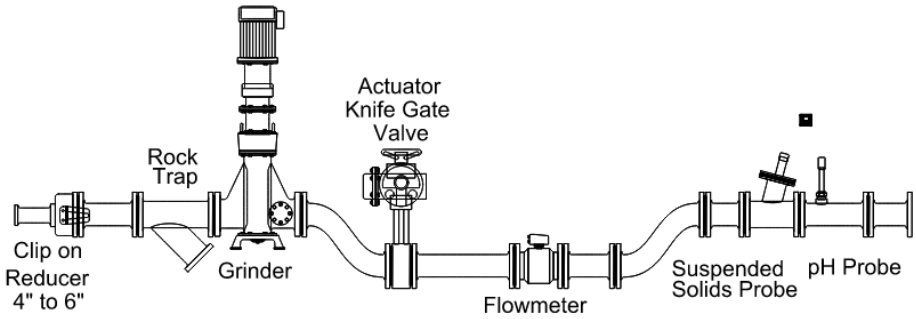
Actuator
Knife Gate
Valve
Rock
Trap
Clip on
Reducer
4" to 6"
Grinder
Flowmeter
Suspended
Solids Probe
pH Probe

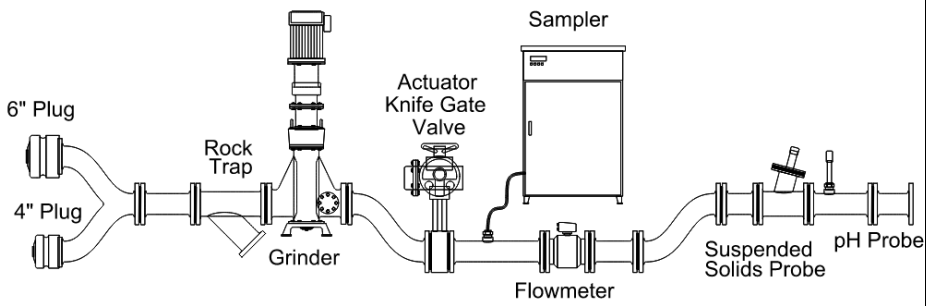
Sampler
Actuator
Knife Gate
Valve
6" Plug
Rock
Trap
4" Plug
Grinder
Flowmeter
Suspended
Solids Probe
pH Probe

WaSP.Se

Operation and Maintenance Impacts	
Power Consumption	Screen: 0.75 HP (SRS 20) / 1.5 HP (SRS 28)
Minimizes Construction Disruption	There are no significant differences in construction disruption between the proposed technologies.
Reduces Process Complexity	Operationally, all proposed alternatives have similar process complexity.
Access	Access to auger motors may require the use of a metal platform.
O&M Requirements	Cleaning brushes (check the wear): 100 hours Screen basket efficiency: 100 hours Washing system efficiency: Weekly Bolts fixing (check the tightness of holts and anchors): 6 months Absence of clogging in the compaction zone: Weekly Absence of blockage in the screening outlet: Weekly Absence of blockage liquid return pipe (from compaction zone): Weekly Tightness of wear liars: Weekly Gearbox (oil level, leakage, etc.): Monthly Electric motor (cooling fan conditions, bearing conditions. etc.): Monthly Screw conditions (check the wear): 6 months Wear bar conditions (check the wear): 6 months
Process Flexibility	
Redundancy	None. Proposed bypass to Headworks (intercept flow upstream from screen).
Process Capability	Minimum Flow: None Maximum Flow: 220 GPM (SRS 20) or 440 GPM (SRS 28) Discharge Time (truck dependent): 10 to 24 mins (SRS 20) or 5 to 12 mins (SRS 28)
Process Impacts	
Wash Water	Tank Zone (16 GPM @ 70 psi) / Screening Zone (16 GPM @ 70 psi) / Transport Zone (16 GPM @ 70 psi) / Compaction Zone (13 GPM @ 45 psi)
Central Kitsap Wastewater Treatment Plant impacts	
Space Constraints	Approximate dimensions: 24’ L x 10’ H x 3’ W
Minimizes Risks	Established technology; however, no installation in North America for the SEPRAPAC Type SCS (only in Europe). A few “screen-only” (SEPRAPAC® SRS) in North America.
Control Noise and Odors	Noise: Minimal Odor: Enclosed equipment that can be connected to odor control equipment
Familiarity with Technology	Screening system similar to current Lakeside unit.
Reduced Technology Risk	Commonly used packaged system, similar to other vendors.
Vendor Cost Quotations	
Veolia	SEPRAPAC® SCS (Septage Combined System): $275,000 • Second Screen and Piping Modification: $60,000 • Automatic Billing and Monitoring System with Instrumentation: $35,000
	SEPRAPAC® SRS (Septage Screen Only): $160,000 • Automatic Billing and Monitoring System with Instrumentation: $35,000

Lakeside Raptor® Septage Complete Plant	
General Description	• Fully automated pre-engineered unit that includes receiving, screening, grit removal, and skims residual FOG.
Technology	• Raptor® Septage Complete Plant Model 31SCPA-0.25.

Vendor Layouts:

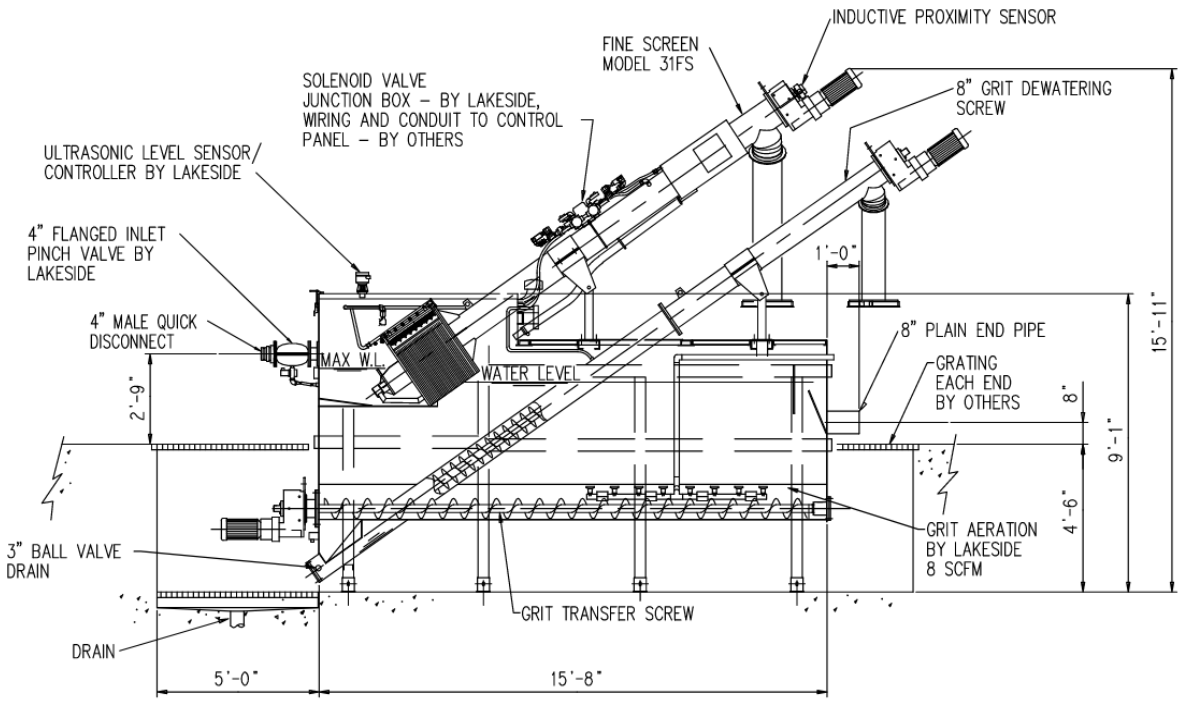

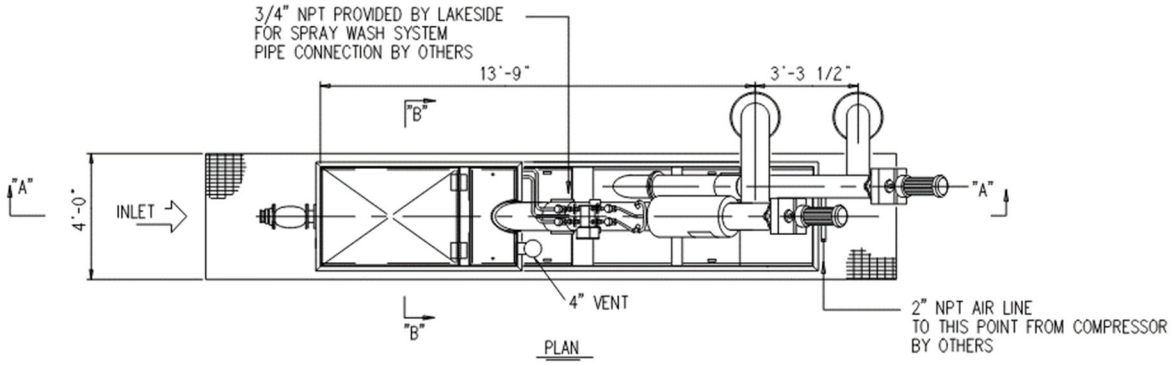

Vendor Layouts:

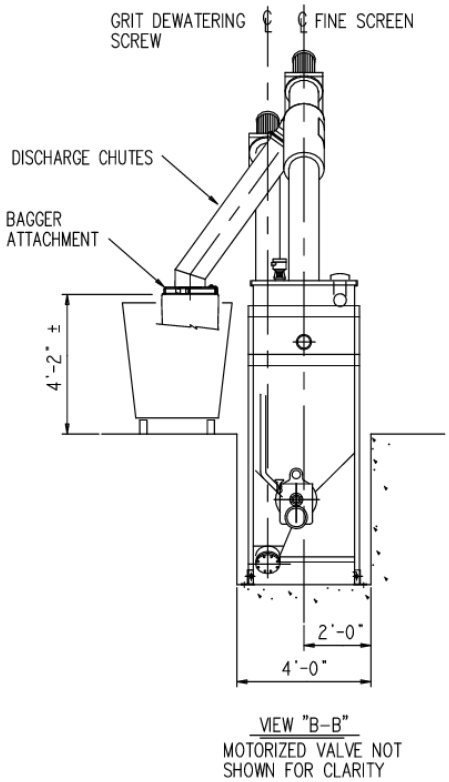

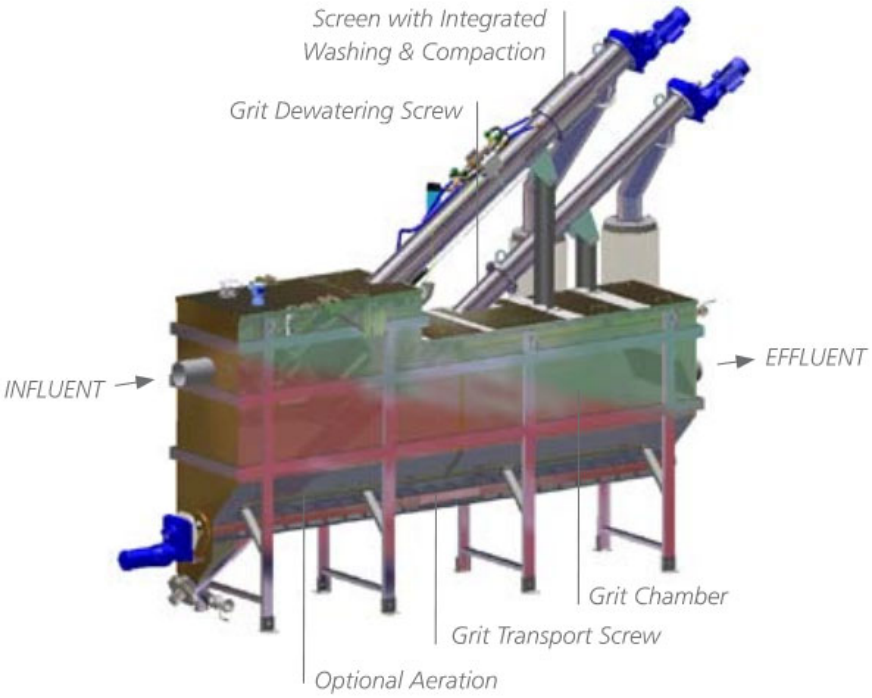

Process Description	The Lakeside Raptor septage receiving station receives flow through the inlet connection and valve, custom-engineered rock trap, magnetic flow meter, pH sensor, screening with washing and compacting, grit removal screws, and aeration headers in a stainless-steel tank. Screened material is transported to a central screw conveyor and washed, then compacted and dewatered (up to 40% solids). The unit provides grit removal (up to 90% through >65 mesh). The grit chamber includes aeration to keep organics suspended and allow grit to settle, regardless of flow. The grit chamber can also be equipped with an optional grease trap. Excess grease can be removed manually, or a motorized skimmer can be provided. The unit also includes the Raptor® Acceptance Control System (RACS): • Creates and manages customer and truck account information • Controls sampling • Controls access on a truck-by-truck basis • Tracks number and sizes of loads for each hauler, and assigns PIN numbers • Provides invoicing and report generation

Reference Images	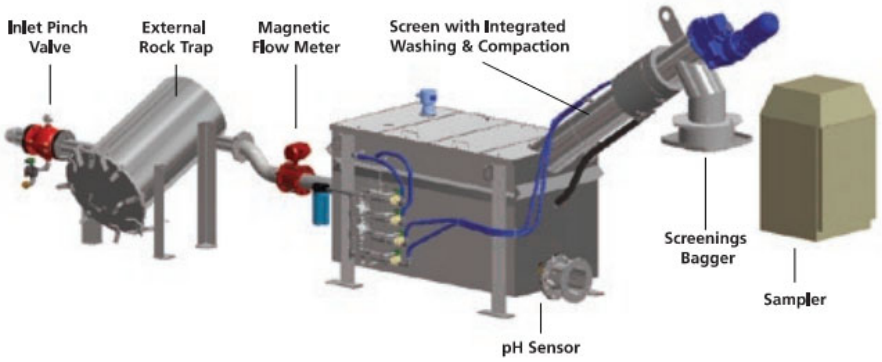

Operation and Maintenance Impacts	
Power Consumption	Fine Screen: 2 HP Grit Transfer Screw: 1 HP Grit Dewatering Screw: 2 HP Blower Assembly: 2 HP

Minimizes Construction Disruption	There are no significant differences in construction disruption between the proposed technologies.
Reduces Process Complexity	Operationally, all proposed alternatives have similar process complexity.
Access	Access to auger motors may require the use of a metal platform.
O&M Requirements	O&M requirements are similar to the Veolia SEPRAPAC® SCS System and Huber ROTAMAT® Ro 3.3 Septage Receiving Station.
Process Flexibility	
Redundancy	None. Proposed bypass to Headworks (intercept flow upstream from screen).
Process Capability	Minimum Flow: None Maximum Flow: 400 GPM
Process Impacts	
Wash Water	25 GPM at 60 psi
Central Kitsap Wastewater Treatment Plant impacts	
Space Constraints	21’ L X 16’ H X 4’ W
Minimizes Risks	Established technology and manufacturer. Existing equipment provided by same manufacturer.
Control Noise and Odors	Noise: Minimal Odor: Enclosed equipment that can be connected to odor control equipment.
Familiarity with Technology	Screening system similar to current Lakeside unit, includes grit removal and grease skimming, which are not new technologies.
Reduced Technology Risk	Commonly used packaged system, similar to other vendors.
Vendor Cost Quotations	

Lakeside	• Lakeside Raptor® Septage Complete Plant Model 31SCPA-0.25: $388,000
	• Optional Components:
	  o Screenings and Grit Baggers: $2,600
	  o Explosion Proof Design Package: $10,000
	  o RACS Control Station with Flow Meter: $33,800
	  o RACS Management and Accounting System w/ PC Computer: $21,000
	  o Grease Collection System: $50,000
	  o Weather Protection Package: $24,000

Huber - ROTAMAT® Ro 3.3 Septage Receiving Station w/ Grit Removal	
General Description	• Fully automated pre-engineered unit that includes receiving, screening, grit removal, automatic billing, and various instrumentation/monitoring.
Technology	• ROTAMAT® Ro 3.3

Vendor Layouts:

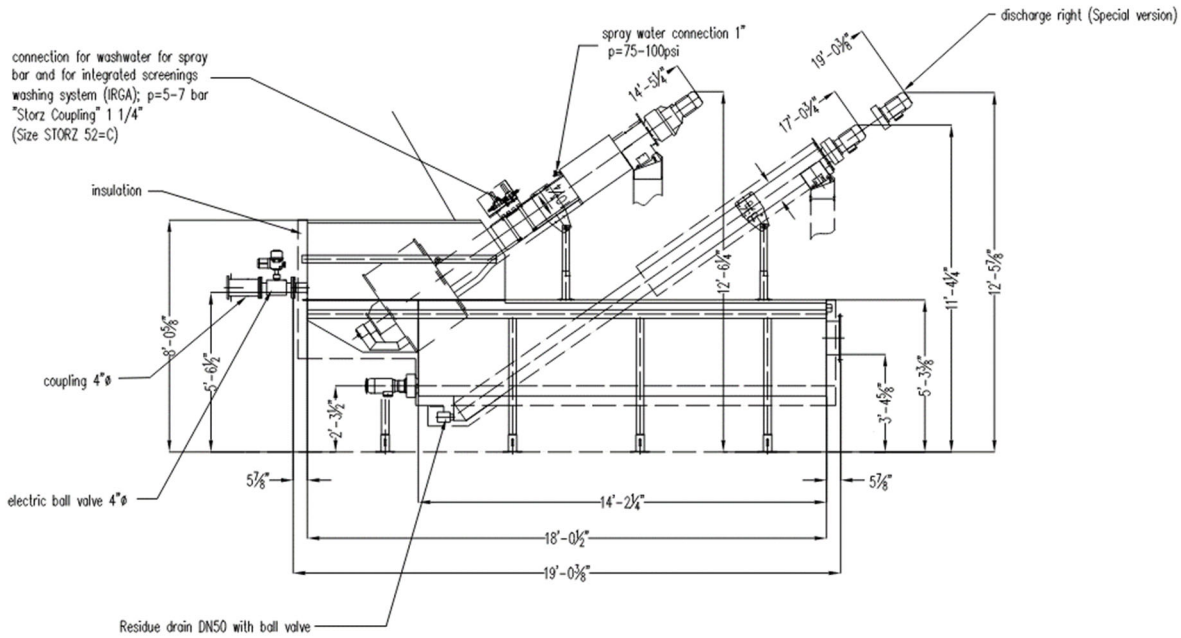

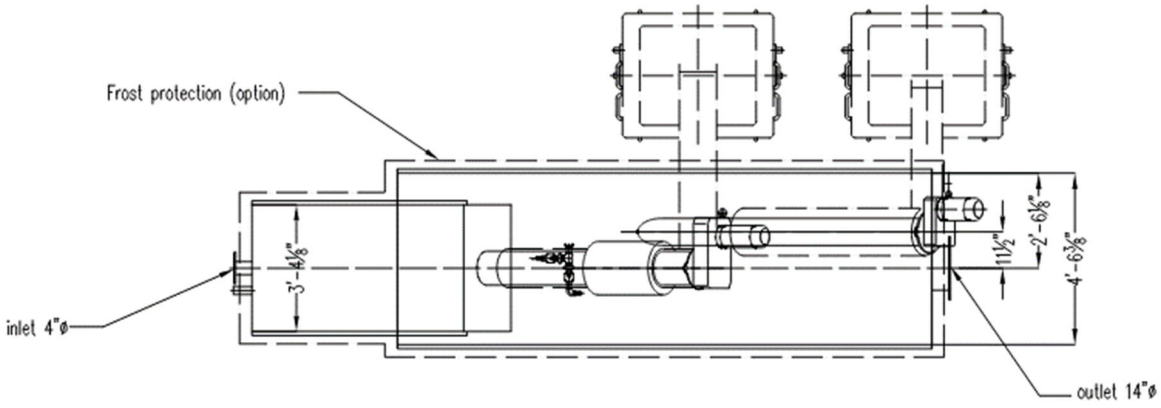

Vendor Layouts:

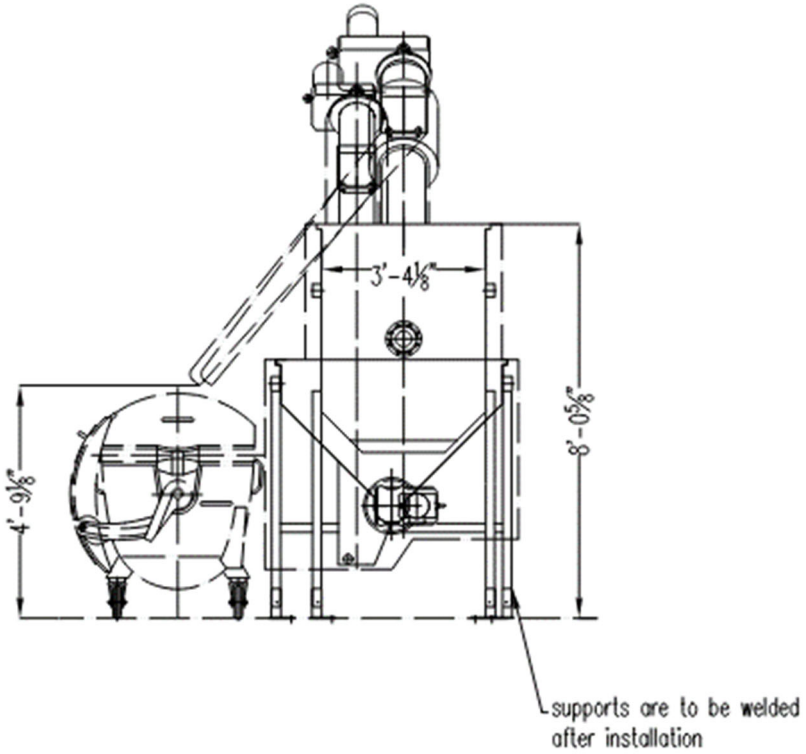

Process Description	The Huber ROTAMAT® Ro 3.3 septage receiving station receives septage flow through the inlet connection and electric actuated valve, custom-engineered rock trap, and into the cylindrical bar screen inside the tank. A rake and auger remove screened material and pushes them up into the auger tube, where they are dewatered and compacted. An optional screenings washer is available to further reduce weight and volume by washing out organics. Instrumentation includes pH meter, TSS meter, card reader, etc. The unit also includes the Port-A-Logic Hauler Station: • Manages the overall receiving facility and trucks operation • Collects data about load while controlling the equipment and valves when a truck is offloading • Performs customer identification, metering, data recording and data storage as well as invoicing. • pH measurement and automatic sampling can also be incorporated to prevent disposal of harmful sludge or record of details of such incidents

Reference Images	

Operation and Maintenance Impacts	
Power Consumption	Screen Motor is 1.5HP or 2.0HP; Horizontal Grit Screw is 0.75hp, Inclined Screw is 1.5hp.
Minimizes Construction Disruption	There are no significant differences in construction disruption between the proposed technologies.
Reduces Process Complexity	Operationally, all proposed alternatives have similar process complexity.
Access	Access to auger motors may require the use of a metal platform.
O&M Requirements	O&M requirements are similar to the Veolia SEPRAPAC® SCS System and Lakeside Raptor® Septage Complete Plant.
Process flexibility	
Redundancy	Available, not proposed. Proposed bypass to Headworks (intercept flow upstream from screen).
Process Capability	Minimum Flow: None Maximum Flow: 400 GPM
Process Impacts	
Washwater	75-100 psi
Central Kitsap Wastewater Treatment Plant impacts	
Space Constraints	19’ L X 12.5’ H X 4.5’ W
Minimizes Risks	Established technology and manufacturer. Existing equipment provided by same manufacturer.
Control Noise and Odors	Noise: Minimal Odor: Enclosed equipment that can be connected to odor control equipment
Familiarity with Technology	Screening system similar to current Lakeside unit, includes grit removal and grease skimming, which are not new technologies.
Reduced Technology Risk	Commonly used packaged system, similar to other vendors.

Vendor Cost Quotations	
Huber	• ROTAMAT® Ro 3.3 Septage Receiving Station: $350,000

Inorganic Biofilter	
General description	This alternative scope includes: • Inorganic biofilter with engineered media. • In ground vessel (earthen berm or concrete walls) with designed lateral/diffuser system that is open to atmosphere • Redundant fans (duty/standby), pre-wetting system, biofilter irrigation system, biofilter drainage system, and appurtenances. • Target for H2S and reduced sulfur compounds. Some suppliers (Bohn) can have a single odor control system that is capable of treating H2S and NH3.
Technology	• BIOREM, ECS Environmental Solutions, GES Biotek, Bioair, Pureair or approved equal for inorganic engineered media. • Bohn may be considered but operating conditions of the media are significantly different than Suppliers listed above.

Process drawings

Similar layouts:

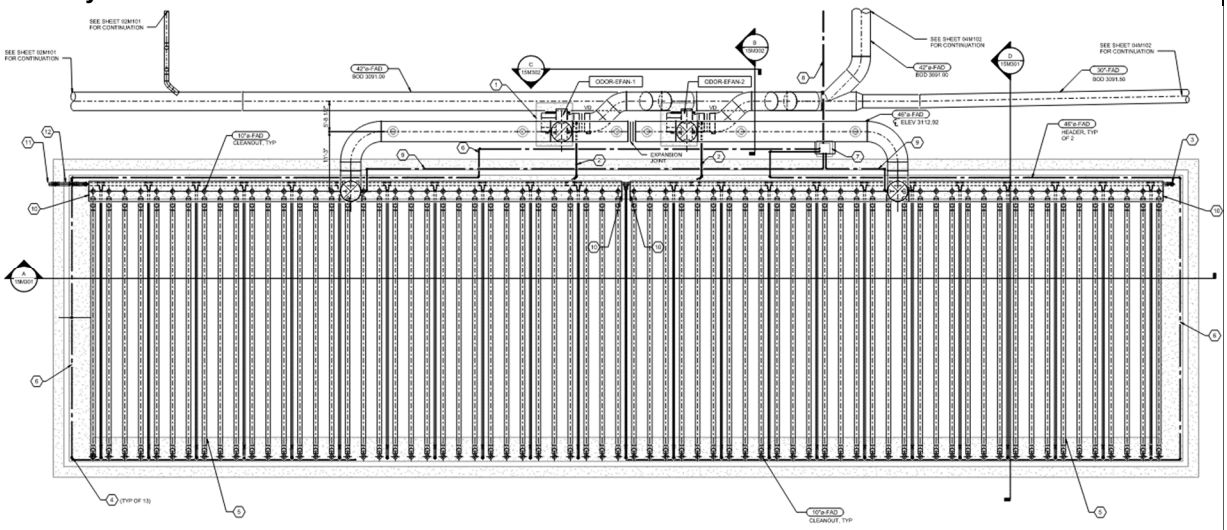

Billings, MT Biofilter Plan

Process drawings

Similar layouts:

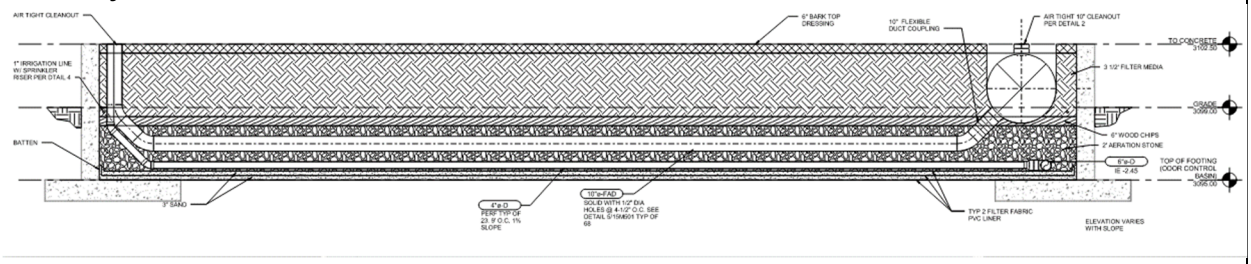

Billings, MT Biofilter Section

Process description	Odorous air is collected from the various sources via duty/standby fans and ductwork. Air is then passes through a lateral/diffuser system, evenly distributes air to the bottom of the biofilter media, the odorous air passes through the media before being released to the atmosphere. On the discharge of the fans, the odorous air is pre-wetted before passing through the biofilter media, this aids in creating an optimal environment for the bacteria growing on the biofilter media that consume the odorous compounds. Additionally, a surface irrigation system will be installed as another means of wetting the biofilter bed. Lastly, a drainage system will be provided to drain excess water away from the biofilter bed.
Design Parameters	
Empty Bed Residence Time (EBRT)	45 to 90 seconds
Volumetric Loading Rate (VLR)	3 to 10 cfm/sf
Media pressure loss	½ to 1 in W.C./ft of media
Leachate	1 to 2 pH
Maintenance required	Primary maintenance will include the following: • Typical fan maintenance including regular inspections, bearing lubrication, and sheave adjustment. • Latera/diffuser hydro jetting, as needed (every 5-12 years approximately). • Weed control on surface of biofilter bed. • Media replacement, minimum expected life of 10 years. • Maintaining surface irrigation and pre-wetting systems.

Reference images	 **Billings, MT Biofilter**
Reference images	 **Billings, MT Biofilter**
Operation and maintenance impacts	
Power consumption	7.5 hp for each fan.

Removal Efficiencies	Hydrogen Sulfide (H_2S) – 99% removal or less than 0.1 ppm at outlet. Odor units – 90% removal or less than 600 OU at outlet. <u>Bohn Filter:</u> Hydrogen Sulfide (H_2S) – 99% removal or less than 0.1 ppm at outlet with H_2S peaks up to 200 ppm Ammonia (NH_3) – 90% removal or less than 5 ppm at outlet with NH_3 peaks up to 100 ppm
Cover access	Open to atmosphere, can walk on media for maintenance only
Water Consumption	Approximately 100 gpd.[NA1] Operator adjustable and seasonal usage.
O&M requirements	Requires fan maintenance, weeding, and hydro jetting.
Process flexibility	
Operational plan	System requires acclimation period upon startup and is intended to run continuously. Fans assumed to be duty/standby.
Treatment Plant impacts	
Space constraints	Requires larger footprint than other alternatives. Approximately 600 square feet.
Control noise and odors	Treats odors to acceptable levels on site. Option for noise enclosures on fans.
Familiarity with technology	Yes, familiar with organic biofilters.
Life-cycle cost	
Capital cost	$990,000 to $1,157,000 depending on H2S vs. NH3 treatment
O&M cost	$16,000 to $27,000 annually
Economic analysis assumptions	Lifespan of the media and irrigation system is assumed to be 10 years. This alternative must be combined or duplicated if two separate treatment systems are desired.
Economic assessment	Biofilter installation is generally more expensive than carbon, but requires less frequent media changes.

Carbon Scrubber	
General description	This alternative scope includes: • Carbon adsorption media in a fiberglass reinforced plastic (FRP) tank. • Slab on grade (equipment pad) with fans, tank(s), and appurtenances • Redundant fans (duty/standby) • Typically used on foul air streams of 5 to 10 ppm H2S or less. • Alternative media can be used to target ammonia.
Technology	• Daniel Mechanical, ECS, Evoqua, PureAir, or approved equal • Media can be produced from a variety of sources, vary in capacity, be chemically impregnated to optimize performance. • Many configurations available: single bed, dual bed, vertical-bed and radial flow. Selection is driven by footprint.

Process drawings

Dual bed schematic:

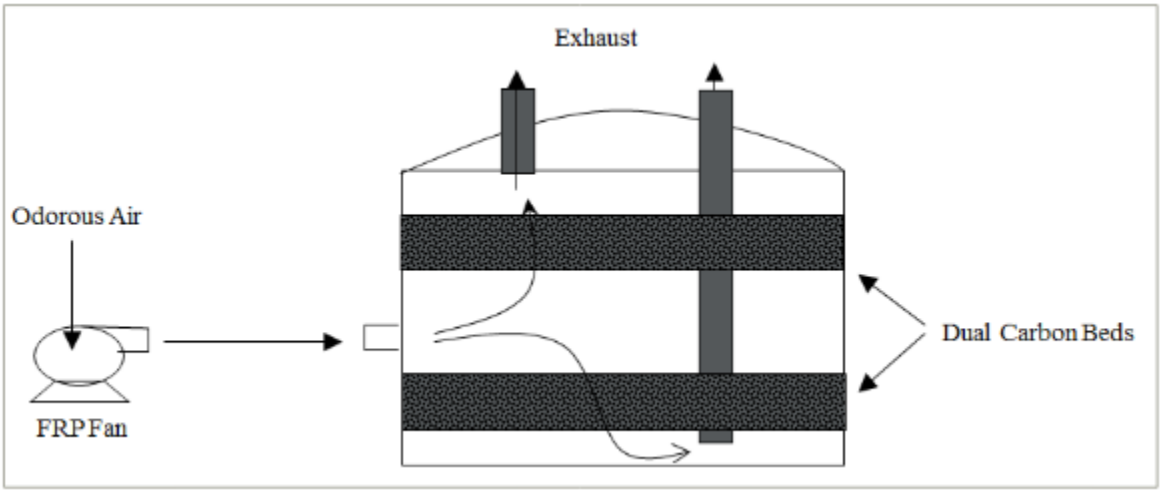

Process drawings

Radial bed schematic:

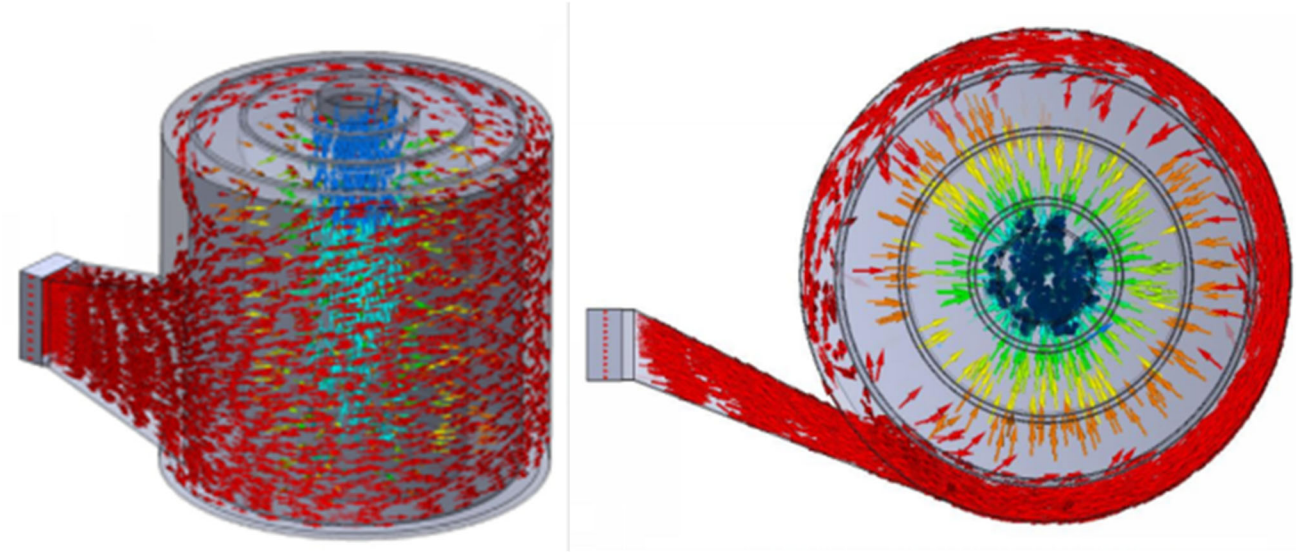

Process description	Odorous air is collected from the various sources via duty/standby fans and ductwork. Air is then passes through the carbon system, the odorous air passes through the media before being released to the atmosphere. The carbon media uses adsorption technology for odor removal, where the odors adhere to or chemically react with the media. Contaminants accumulate on the media surface and require regeneration or replacement once the surface area of the media is covered.
Design Parameters	
Empty Bed Residence Time (EBRT)	2+ seconds
Bed face velocity	50 to 60 fpm
Maximum bed depth	3 ft
Media pressure loss	1 to 2 in W.C./ft of media
Leachate	N/A
Maintenance required	Primary maintenance will include the following: • Typical fan maintenance including regular inspections, bearing lubrication, and sheave adjustment. • Media replacement, 1 – 4 years depending on odorous concentrations.

Reference images	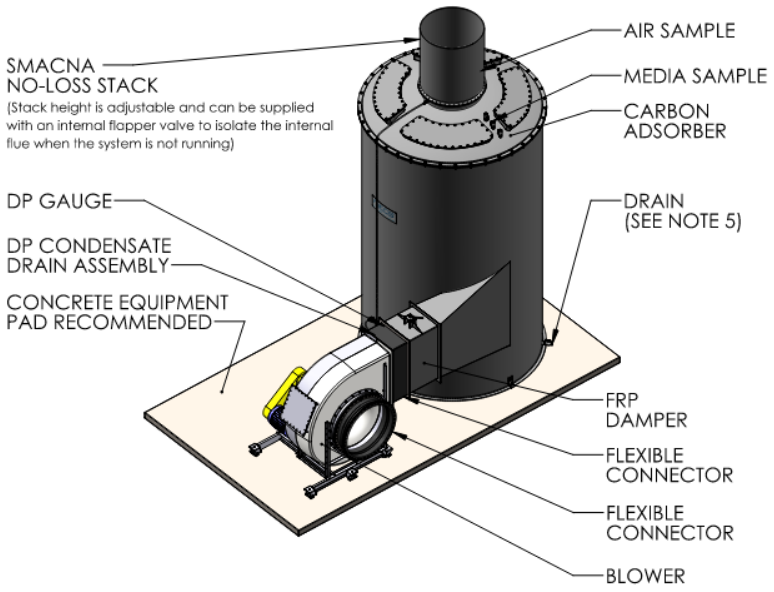 **ECS Carbon Vessel and Fan (VX-30000)**
Reference images	 **Carbon System**
Operation and maintenance impacts	
Power consumption	10 hp for each fan.
Removal Efficiencies	Hydrogen Sulfide capacity (g H2S/cc) – 0.02 to 0.3 depending on media selection (virgin carbon up to high capacity) Ammonia media silicon/aluminum impregnated
Cover access	Closed vessel with exhaust stack and top manhole access.
Water Consumption	0 gpd
O&M requirements	Requires fan maintenance, media inspection/regeneration/replacement
Process flexibility	
Operational plan	System can be turned on and off
Treatment Plant impacts	
Space constraints	Requires smaller footprint than other alternatives. Approximately 250 sf for fan/scrubber.
Control noise and odors	Treats odors to acceptable levels on site. Option for noise enclosure.

Familiarity with technology	Yes.
Life-cycle cost	
Capital cost	$910,000
O&M cost	$17,000-$30,000 annually depending on media replacement frequency and type
Economic analysis assumptions	Lifespan of the carbon media is assumed to be 1 year for ammonia and 2 years for H2S. This life span would need to be validated with some site testing to confirm concentrations and media life during design.
Economic assessment	Carbon installation is generally less expensive than the biofilter, but requires more frequent media changes.

Alternative 3: Single Inorganic Biofilter (Bohn)	
General description	This alternative scope includes: • A single odor control system that is capable of treating H2S and NH3. • Inorganic biofilter with engineered media. • In ground vessel (earthen berm or concrete walls) with designed lateral/diffuser system that is open to atmosphere • Redundant fans (duty/standby), pre-wetting system, biofilter irrigation system, biofilter drainage system, and appurtenances.
Technology	• Bohn is the primary contender in this alternative. Others may be identified as design progresses.

Process drawings

Similar layouts:

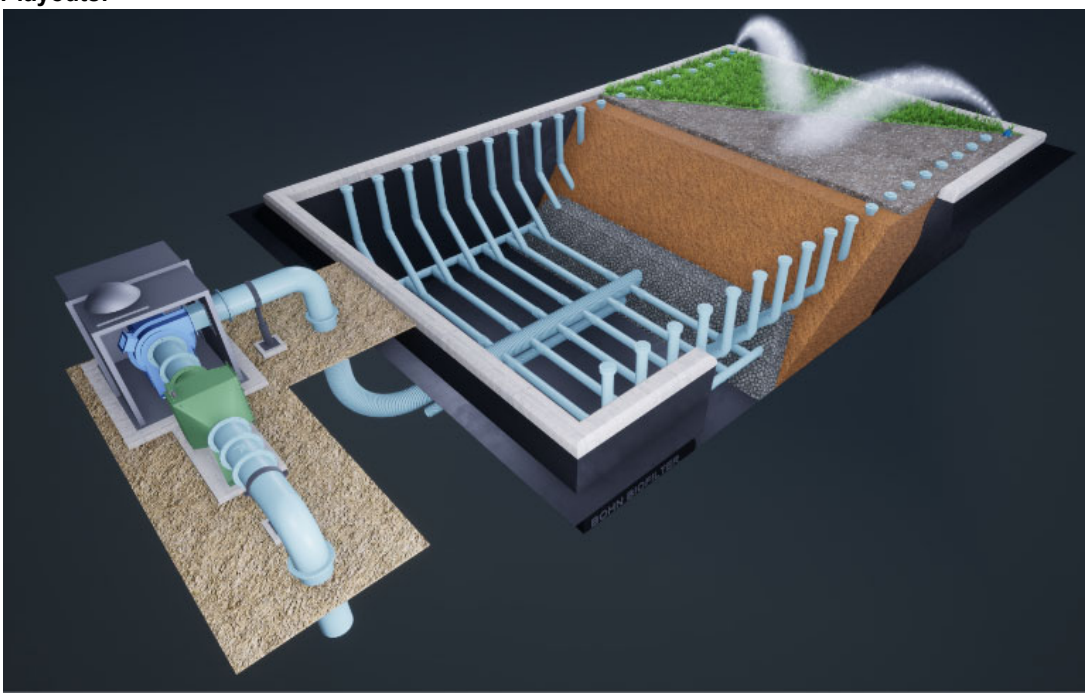

3D Rendering of Bohn Biofilter, Source Bohn proposal

Process drawings

Similar layouts:

Surface options, Source Bohn Proposal

Process description	Odorous air is collected from the various sources via duty/standby fans and ductwork. Air then passes through a lateral/diffuser system, evenly distributes air to the bottom of the biofilter media, the odorous air passes through the media before being released to the atmosphere. On the discharge of the fans, the odorous air is pre-wetted before passing through the biofilter media, this aids in creating an optimal environment for the bacteria growing on the biofilter media that consume the odorous compounds. Additionally, a surface irrigation system will be installed as another means of wetting the biofilter bed. Lastly, a drainage system will be provided to drain excess water away from the biofilter bed.
Design Parameters	
Empty Bed Residence Time (EBRT)	45 to 90 seconds
Volumetric Loading Rate (VLR)	3 to 10 cfm/sf
Media pressure loss	1 to 2 in W.C./ft of media
Drainage	+/- 7 pH
Maintenance required	Primary maintenance will include the following: • Typical fan maintenance including regular inspections, bearing lubrication, and sheave adjustment. • Latera/diffuser hydro jetting, as needed (every 5-12 years approximately). • Weed control on surface of biofilter bed. • Media replacement, minimum expected life of 10 years. • Maintaining surface irrigation and pre-wetting systems.

Reference images	 **Bohn Media Biofilter** **Wenatchee, WA**
Operation and maintenance impacts	
Power consumption	10 hp for each fan.
Removal Efficiencies	Hydrogen Sulfide (H_2S) – 99% removal or less than 0.1 ppm at outlet with H_2S peaks up to 200 ppm Ammonia (NH_3) – 90% removal or less than 5 ppm at outlet with NH_3 peaks up to 100 ppm
Cover access	Open to atmosphere, can walk on media
Water Consumption	TBD. Operator adjustable and seasonal usage.
O&M requirements	Requires fan maintenance, weeding, and hydro jetting.
Process flexibility	
Operational plan	System requires acclimation period upon startup and is intended to run continuously. Fans assumed to be duty/standby.
Treatment Plant impacts	
Space constraints	Requires larger footprint than other alternatives. Approximately 600 square feet.
Control noise and odors	Treats odors to acceptable levels on site. Option for noise enclosures on fans.
Familiarity with technology	Yes, familiar with organic biofilters.
Life-cycle cost	
Capital cost	$1,601,000
O&M cost	$11,500 annually
Economic analysis assumptions	Lifespan of the media and irrigation system is assumed to be 10 years. This alternative does not require any other alternative be paired with it to meet the intent of the design.
Economic assessment	The 20-year net present value is $1.9M.

Project Alternatives Workshop

Title	PR000848 Solids Upgrade - FOG Treatment Options
Owner	County of Kitsap
Facility Name	Wastewater Reclamation Facilities
Location	Kitsap County, WA

8/23/2023

Attendees:

, Nate	Bayless, Floyd	Bolton, Randy	Graham, Dennis	Martin, Nick
Neal, Richard	Pickering, Matt	Sheridan, Chris	W, Chris	Yates, John
Cairns, Amara	Chapman, Matt	Koch, John	Moran, Jarrett	Staples, Andrew
Thompson, Luke	Tolentino Lauar, Mathe	Zahller, Jeff		

Criteria Pairwise Comparisions

Legend:

- ⬆ is extremely more important than
- ↑ is much more important than
- ↗ is more important than
- → is as important as
- ↘ is less important than
- ↓ is much less important than
- ⬇ is extremely less important than

Criteria No.		2	3	4	5	6	7
1	Community Impacts	↗	↓	↓	↓	↓	↘
2	Anticipates Potential Future Regulations		↓	→	↓	↓	↓
3	Operation and Maintenance Requirements			↑	→	→	↗
4	Resource Responsibility				↘	↓	→
5	Resilient System					↑	↗
6	Readily Implementable						⬆
7	Non-Proprietary Equipment						

Criteria Weighting Summary

1	**Resilient System** Proven Technology, Reliable Equipment and process, Redundant Capacity, Minimal Equipment Downtime, Operational Flexibility, Optimizes use of available space and infrastructure	34%
2	**Readily Implementable** Standard Construction Methods, Minimal Operations Disruptions, Readily attainable permits, Short Design & Construction Period, No Long Lead Time Products	24%
3	**Operation and Maintenance Requirements** Leverages Automation, Operational Simplicity, Consistent with Current Operations, Improves working environment and safety, Improves performance of impacted processes	21%
4	**Non-Proprietary Equipment** Equipment is readily available and open source	7%
5	**Resource Responsibility** Energy Aware, Minimizes Chemical Consumption, Repurposing Existing Facilities, Non-Potable Availability, Reduced net GHG emissions	7%
6	**Community Impacts** Reduces Odor, Noise, Traffic, Visual impacts, Spills, Septage Hauler Accomodations	3%
7	**Anticipates Potential Future Regulations** Considers current best understanding of regulatory direction	3%

Project Alternatives

1	FOG Receiving and Separation Center (Greasezilla)	Higher level grease processing Would not go to digester Payback on product More complex components Proprietary
2	Repurposed Raptor Septage Screening (Lakeside)	Repurposed using existing equipment Screening treatment with rock box Heating and pumping to digester
3	Engineered FOG Treatment System (Custom)	Simple design Non-proprietary equipment Maceration instead of screening Heating and pumping to digester
4	BEAST Screening (Enviro-Care)	Combination screening and rock removal in single tank Similar features to Lakeside Heating and pumping to digester

Alternative Scoring Detail

Legend

- ● Very Strong - 9
- ◕ Strong - 7
- ◑ Moderate - 5
- ◔ Low - 3
- ○ Very Low - 1

Criteria

		Community Impacts	Anticipates Potential Future Regulations	Operation and Maintenance Requirements	Resource Responsibility	Resilient System	Readily Implementable	Non-Proprietary Equipment			
1	FOG Receiving and Separation Center (Greasezilla)	○	○	○	○	○	○	○			
2	Repurposed Raptor Septage Screening (Lakeside)	◑	◑	◑	◑	◑	◑	◑			
3	Engineered FOG Treatment System (Custom)	◕	◑	◔	◑	◑	◑	◕			
4	BEAST Screening (Enviro-Care)	◑	◑	◑	◑	◕	◑	◑			

Alternative Final Scores

	Alternative	Score	Capital Cost	Annual O&M	Net Present Value
4	BEAST Screening (Enviro-Care)	57	$1,311,000	$0	$2,417,000
2	Repurposed Raptor Septage Screening (Lakeside)	50	$1,030,000	$0	$1,950,000
3	Engineered FOG Treatment System (Custom)	48	$948,000	$0	$2,334,000
1	FOG Receiving and Separation Center (Greasezilla)	10	$7,016,000	$0	$9,539,000

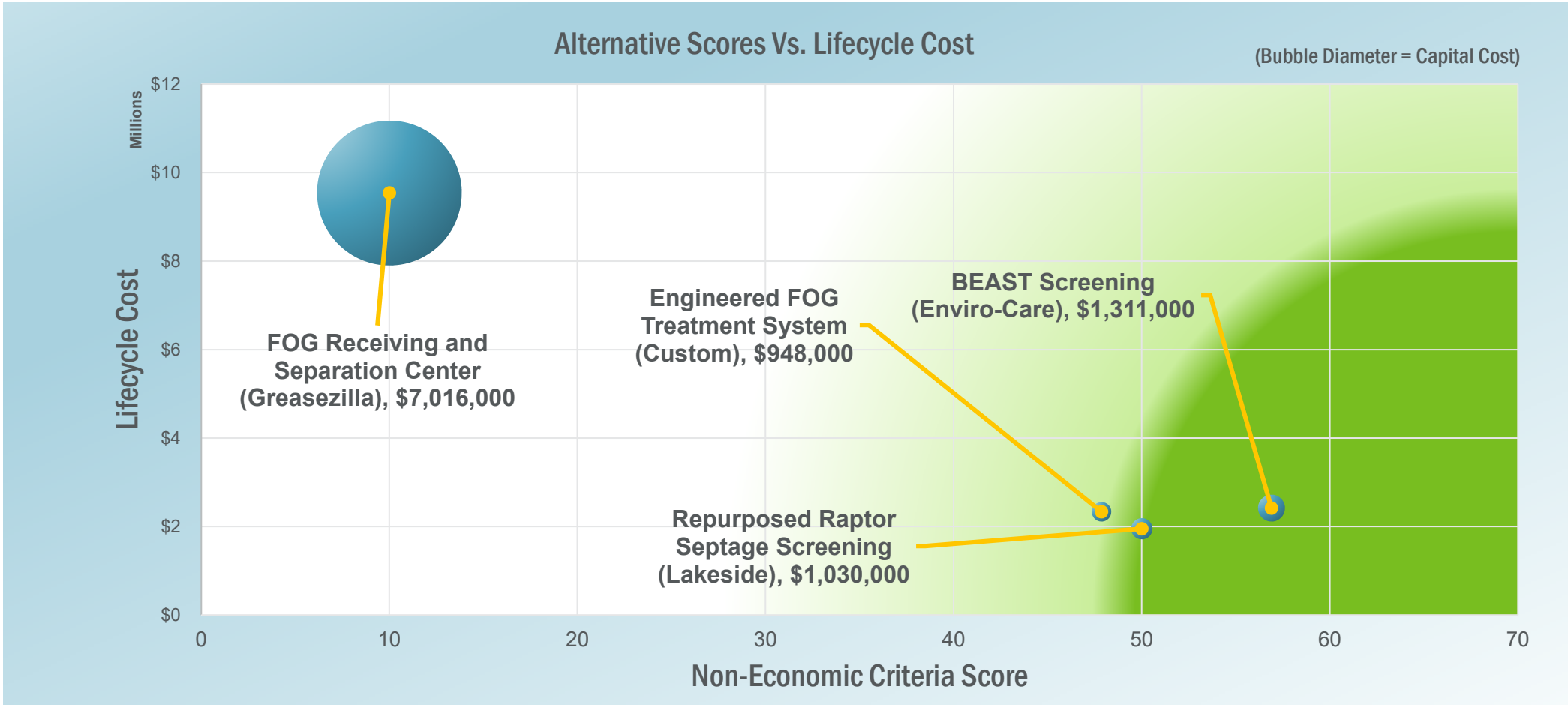
Alternative Scores Vs. Lifecycle Cost
(Bubble Diameter = Capital Cost)
Lifecycle Cost
Millions
$12
$10
$8
$6
$4
$2
$0
0
10
20
30
40
50
60
70
Non-Economic Criteria Score
FOG Receiving and Separation Center (Greasezilla), $7,016,000
Engineered FOG Treatment System (Custom), $948,000
BEAST Screening (Enviro-Care), $1,311,000
Repurposed Raptor Septage Screening (Lakeside), $1,030,000

Project Alternatives Workshop

Title	PR000848 Solids Upgrade - Odor Control (H2S) Options
Owner	County of Kitsap
Facility Name	Wastewater Reclamation Facilities
Location	Kitsap County, WA

8/23/2023

Attendees:

, Nate	Bayless, Floyd	Bolton, John	Graham, Dennis	Martin, Nick
Neal, Richard	Pickering, Matt	Sheridan, Chris	W, Chris	Yates, John
Cairns, Amara	Chapman, Matt	Koch, John	Parmenter, Adam	Staples, Andrew
Thompson, Luke	Tolentino Lauar, Mathe	Zahller, Jeff		

Criteria Pairwise Comparisions

Legend:

- ⬆ is extremely more important than
- ↑ is much more important than
- ↗ is more important than
- → is as important as
- ↘ is less important than
- ↓ is much less important than
- ⬇ is extremely less important than

Criteria No.		2	3	4	5	6	7
1	Community Impacts	↗	↓	↓	↓	↓	↘
2	Anticipates Potential Future Regulations		↓	→	↓	↓	↓
3	Operation and Maintenance Requirements			↑	→	→	↗
4	Resource Responsibility				↘	↓	→
5	Resilient System					↑	↗
6	Readily Implementable						⬆
7	Non-Proprietary Equipment						

Criteria Weighting Summary

1	**Resilient System** Proven Technology, Reliable Equipment and process, Redundant Capacity, Minimal Equipment Downtime, Operational Flexibility, Optimizes use of available space and infrastructure	34%
2	**Readily Implementable** Standard Construction Methods, Minimal Operations Disruptions, Readily attainable permits, Short Design & Construction Period, No Long Lead Time Products	24%
3	**Operation and Maintenance Requirements** Leverages Automation, Operational Simplicity, Consistent with Current Operations, Improves working environment and safety, Improves performance of impacted processes	21%
4	**Non-Proprietary Equipment** Equipment is readily available and open source	7%
5	**Resource Responsibility** Energy Aware, Minimizes Chemical Consumption, Repurposing Existing Facilities, Non-Potable Availability, Reduced net GHG emissions	7%
6	**Community Impacts** Reduces Odor, Noise, Traffic, Visual impacts, Spills, Septage Hauler Accomodations	3%
7	**Anticipates Potential Future Regulations** Considers current best understanding of regulatory direction	3%

Project Alternatives

1	Inorganic Biofilter, H2S	Long life media Larger footprint and capital Simple Operation
2	Carbon Scrubber, H2S	Shorter life media Smaller footprint and capital Simple Operation

Alternative Scoring Detail

Legend

- Very Strong - 9
- Strong - 7
- Moderate - 5
- Low - 3
- Very Low - 1

Criteria

		Community Impacts	Anticipates Potential Future Regulations	Operation and Maintenance Requirements	Resource Responsibility	Resilient System	Readily Implementable	Non-Proprietary Equipment			
1	Inorganic Biofilter, H2S	Moderate	Moderate	Moderate	Strong	Strong	Strong	Strong			
2	Carbon Scrubber, H2S	Moderate	Moderate	Low	Moderate	Strong	Strong	Strong			

Alternative Final Scores

	Alternative	Score	Capital Cost	Annual O&M	Net Present Value
1	Inorganic Biofilter, H2S	65	$990,000	$0	$1,316,000
2	Carbon Scrubber, H2S	59	$909,000	$0	$1,259,000

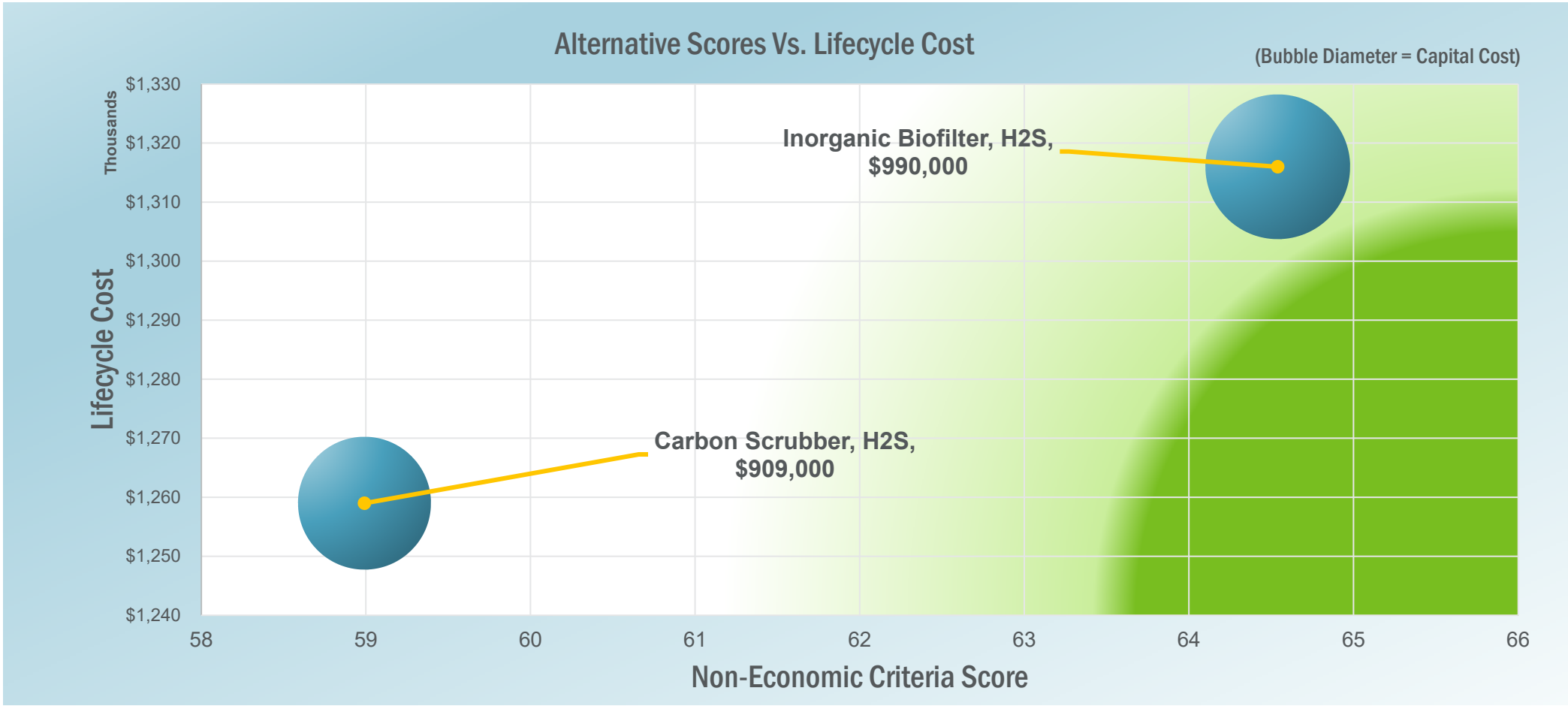
Alternative Scores Vs. Lifecycle Cost
(Bubble Diameter = Capital Cost)
Lifecycle Cost
Thousands
$1,330
$1,320
$1,310
$1,300
$1,290
$1,280
$1,270
$1,260
$1,250
$1,240
58
59
60
61
62
63
64
65
66
Non-Economic Criteria Score
Inorganic Biofilter, H2S, $990,000
Carbon Scrubber, H2S, $909,000

Project Alternatives Workshop

Title	PR000848 Solids Upgrade - Septage Facility Options
Owner	County of Kitsap
Facility Name	Wastewater Reclamation Facilities
Location	Kitsap County, WA

8/23/2023

Attendees:

, Nate	Bayless, Floyd	Bolton, Randy	Graham, Dennis	Martin, Nick
Neal, Richard	Pickering, Matt	Sheridan, Chris	W, Chris	Yates, John
Cairns, Amara	Chapman, Matt	Koch, John	Moran, Jarrett	Staples, Andrew
Thompson, Luke	Tolentino Lauar, Mathe	Zahller, Jeff		

Criteria Pairwise Comparisions

Legend:

- ⇑ is extremely more important than
- ↑ is much more important than
- ↗ is more important than
- → is as important as
- ↘ is less important than
- ↓ is much less important than
- ⇓ is extremely less important than

Criteria No.		2	3	4	5	6	7
1	Community Impacts	↗	↓	↓	↓	↓	↘
2	Anticipates Potential Future Regulations		↓	→	↓	↓	↓
3	Operation and Maintenance Requirements			↑	→	→	↗
4	Resource Responsibility				↘	↓	→
5	Resilient System					↑	↗
6	Readily Implementable						⇑
7	Non-Proprietary Equipment						

Criteria Weighting Summary

1	**Resilient System** Proven Technology, Reliable Equipment and process, Redundant Capacity, Minimal Equipment Downtime, Operational Flexibility, Optimizes use of available space and infrastructure	34%
2	**Readily Implementable** Standard Construction Methods, Minimal Operations Disruptions, Readily attainable permits, Short Design & Construction Period, No Long Lead Time Products	24%
3	**Operation and Maintenance Requirements** Leverages Automation, Operational Simplicity, Consistent with Current Operations, Improves working environment and safety, Improves performance of impacted processes	21%
4	**Non-Proprietary Equipment** Equipment is readily available and open source	7%
5	**Resource Responsibility** Energy Aware, Minimizes Chemical Consumption, Repurposing Existing Facilities, Non-Potable Availability, Reduced net GHG emissions	7%
6	**Community Impacts** Reduces Odor, Noise, Traffic, Visual impacts, Spills, Septage Hauler Accomodations	3%
7	**Anticipates Potential Future Regulations** Considers current best understanding of regulatory direction	3%

Project Alternatives

1	SEPRAPAC SCS (Veolia)	Screening and Degritting No NA Installs Grease removal pH and TSS options Controlled/automated off-loading
2	Raptor Complete Plant (Lakeside)	Screening and Degritting Extension of existing plant equipment Grease removal pH and TSS options Controlled/automated off-loading
3	ROTAMAT RO 3.3 Septage Station (Huber)	Screening and Degritting Similar to Lakeside, has 800 US installs Grease removal pH and TSS options Controlled/automated off-loading

Alternative Scoring Detail

Legend

- Very Strong - 9
- Strong - 7
- Moderate - 5
- Low - 3
- Very Low - 1

Criteria

		Community Impacts	Anticipates Potential Future Regulations	Operation and Maintenance Requirements	Resource Responsibility	Resilient System	Readily Implementable	Non-Proprietary Equipment			
1	SEPRAPAC SCS (Veolia)	Strong - 7	Low - 3	Low - 3	Moderate - 5	Low - 3	Low - 3	Low - 3			
2	Raptor Complete Plant (Lakeside)	Strong - 7	Moderate - 5	Very Strong - 9	Moderate - 5	Strong - 7	Moderate - 5	Low - 3			
3	ROTAMAT RO 3.3 Septage Station (Huber)	Strong - 7	Moderate - 5	Strong - 7	Low - 3	Moderate - 5	Moderate - 5	Low - 3			

Alternative Final Scores

	Alternative	Score	Capital Cost	Annual O&M	Net Present Value
2	Raptor Complete Plant (Lakeside)	65	$1,747,000		$2,872,000
3	ROTAMAT RO 3.3 Septage Station (Huber)	52	$1,258,000		$2,322,000
1	SEPRAPAC SCS (Veolia)	33	$1,159,000		$2,069,000

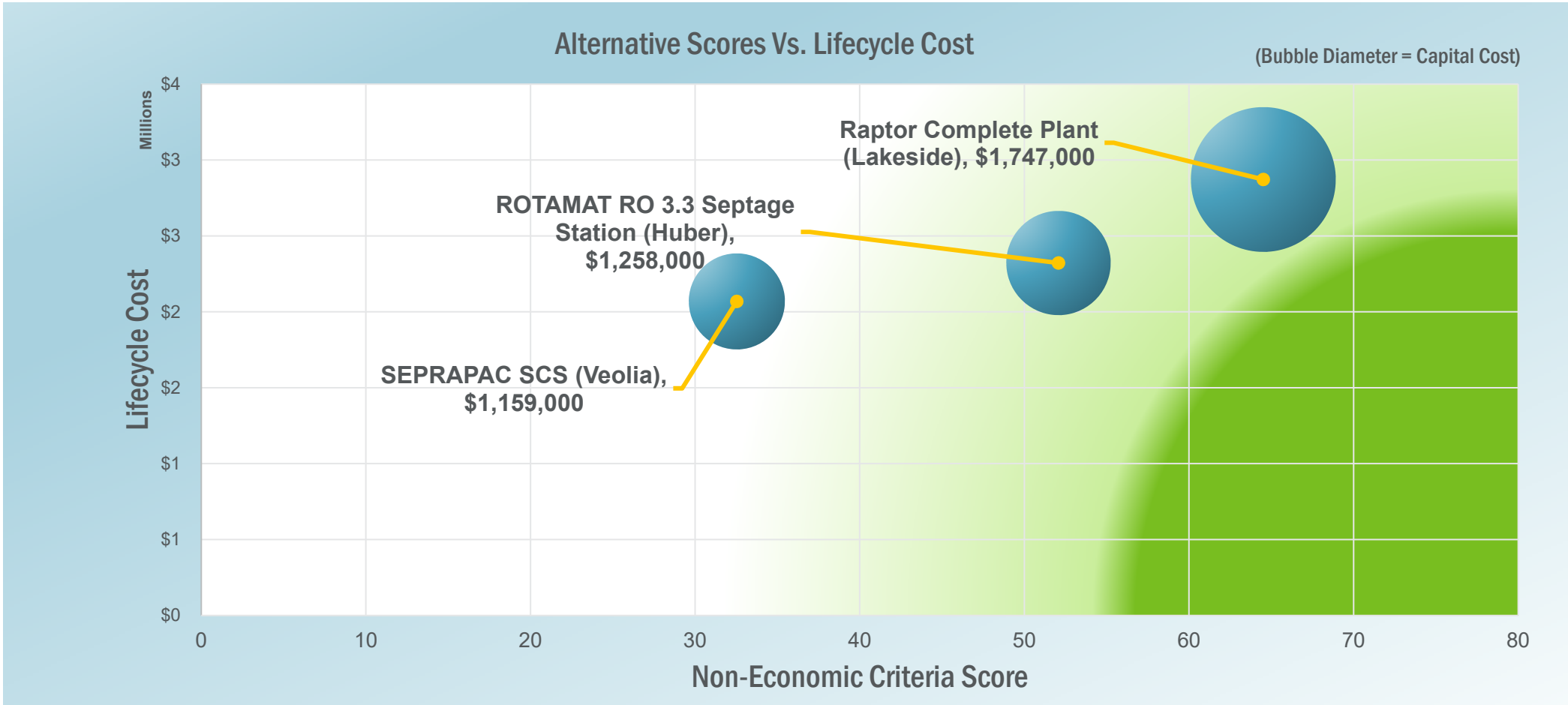
Alternative Scores Vs. Lifecycle Cost
(Bubble Diameter = Capital Cost)
Lifecycle Cost
Millions
$4
$3
$3
$2
$2
$1
$1
$0
0
10
20
30
40
50
60
70
80
Non-Economic Criteria Score
Raptor Complete Plant (Lakeside), $1,747,000
ROTAMAT RO 3.3 Septage Station (Huber), $1,258,000
SEPRAPAC SCS (Veolia), $1,159,000

Appendix D. Operation and Maintenance Building Design Summary

Table of Contents:

- Maintenance Building Draft Layout
- Maintenance Building Architectural Renderings
- Draft Maintenance Building Master Plan Report

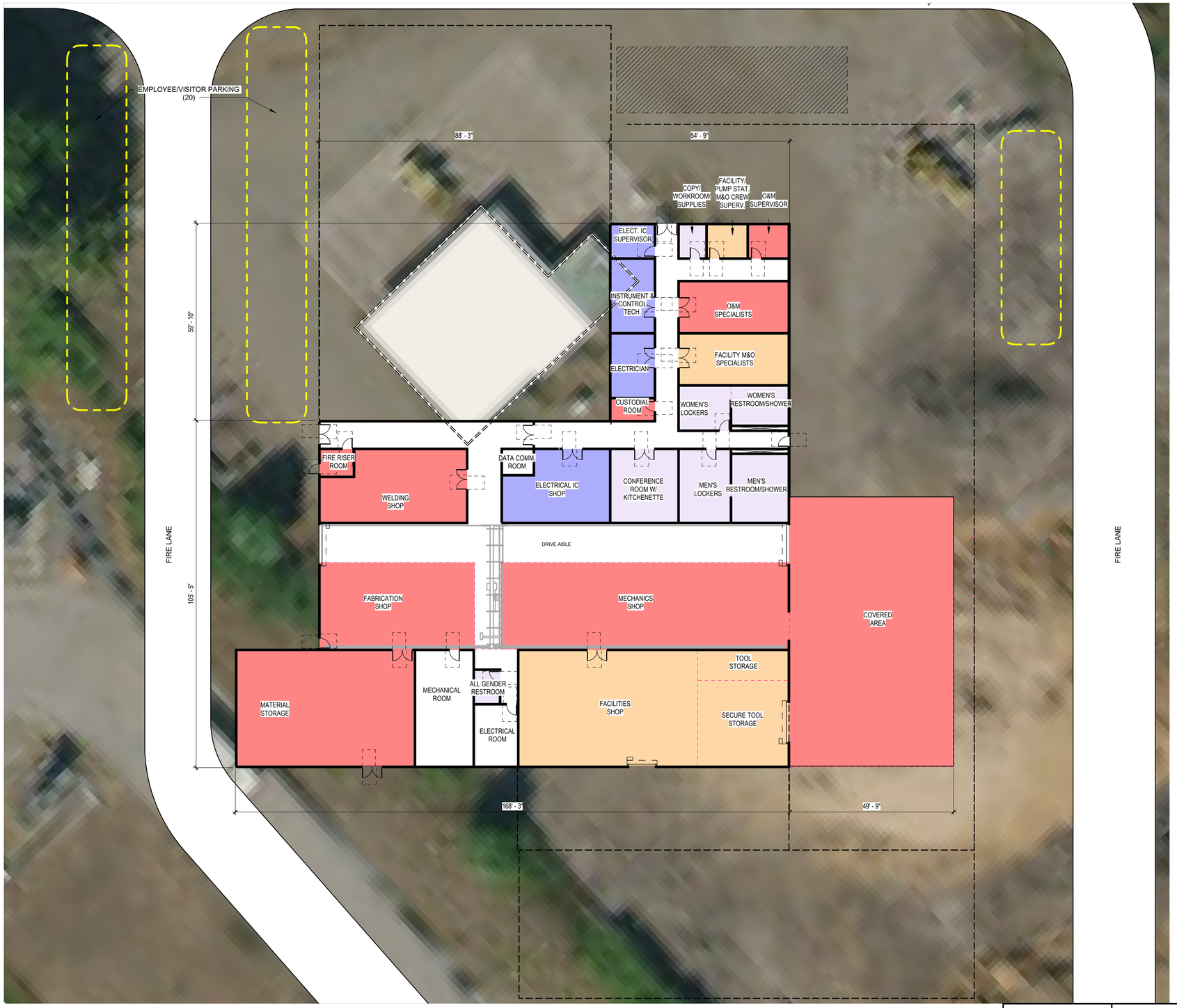

A1 CKTP CONCEPT - F.3 - PHASE 1

1/16" = 1'-0"

16' 0' 16' 32'

SCALE IN FEET

WORKGROUP LEGEND

- ELECTRICIAN IC
- FACILITIES/PUMP STATION M&O
- MECHANICS
- SHARED BY ALL WORKGROUPS

MAINTENANCE BUILDING - PHASE 1

ALL GENDER RESTROOM	75 SF
CONFERENCE ROOM W/ KITCHENETTE	446 SF
COPY/ WORKROOM/ SUPPLIES	80 SF
CUSTODIAL ROOM	85 SF
DATA COMM. ROOM	69 SF
ELECT. IC SUPERVISOR	131 SF
ELECTRICAL IC SHOP	635 SF
ELECTRICAL ROOM	241 SF
ELECTRICIAN	251 SF
FABRICATION SHOP	1229 SF
FACILITIES SHOP	1896 SF
FACILITY M&O SPECIALISTS	506 SF
FACILITY/ PUMP STAT. M&O CREW SUPERV.	120 SF
FIRE RISER ROOM	80 SF
INSTRUMENT & CONTROL TECH.	290 SF
MATERIAL STORAGE	1881 SF
MECHANICAL ROOM	607 SF
MECHANICS SHOP	2292 SF
MEN'S LOCKERS	340 SF
MEN'S RESTROOM/SHOWER	351 SF
O&M SPECIALISTS	506 SF
SECURE TOOL STORAGE	715 SF
TOOL STORAGE	248 SF
WELDING SHOP	886 SF
WOMEN'S LOCKERS	205 SF
WOMEN'S RESTROOM/SHOWER	202 SF
SUBTOTAL:	14,367 SF
CIRCULATION AND DRIVE AISLE:	4,715 SF
***TOTAL ENCLOSED:**	**19,082 SF**

* TOTAL ENCLOSED DOES NOT INCLUDE COVERED AREAS

HDR Engineering, Inc.
929 108th Ave NE #1300
Bellevue, WA 98004
425-450-6200
www.hdrinc.com

DRAWN BY: C. GONZALEZ
CHECKED BY: O. YOUNG
DATE: 11/16/23
SHEET Z-111

KITSAP CKTP HAULWASTE UPGRADES

LOCATION & DESCRIPTION:
12351 Brownsville Hwy NE, Poulsbo, WA 98370
Kitsap County Central Kitsap Wastewater Treatment Plant (CKTP)

SHEET TITLE:
CKTP MAINTENANCE BUILDING - PHASE 1

Autodesk Docs://10367638_CKTP_Solids_and_Liquid_Hauled_Waste_Upgrades_2022/CKTP - MASTER PLAN CHARRETTE_v22.rvt
11/16/2023 4:17:14 PM

FACILITY
EQUIPMENT
CONTAINER FILE

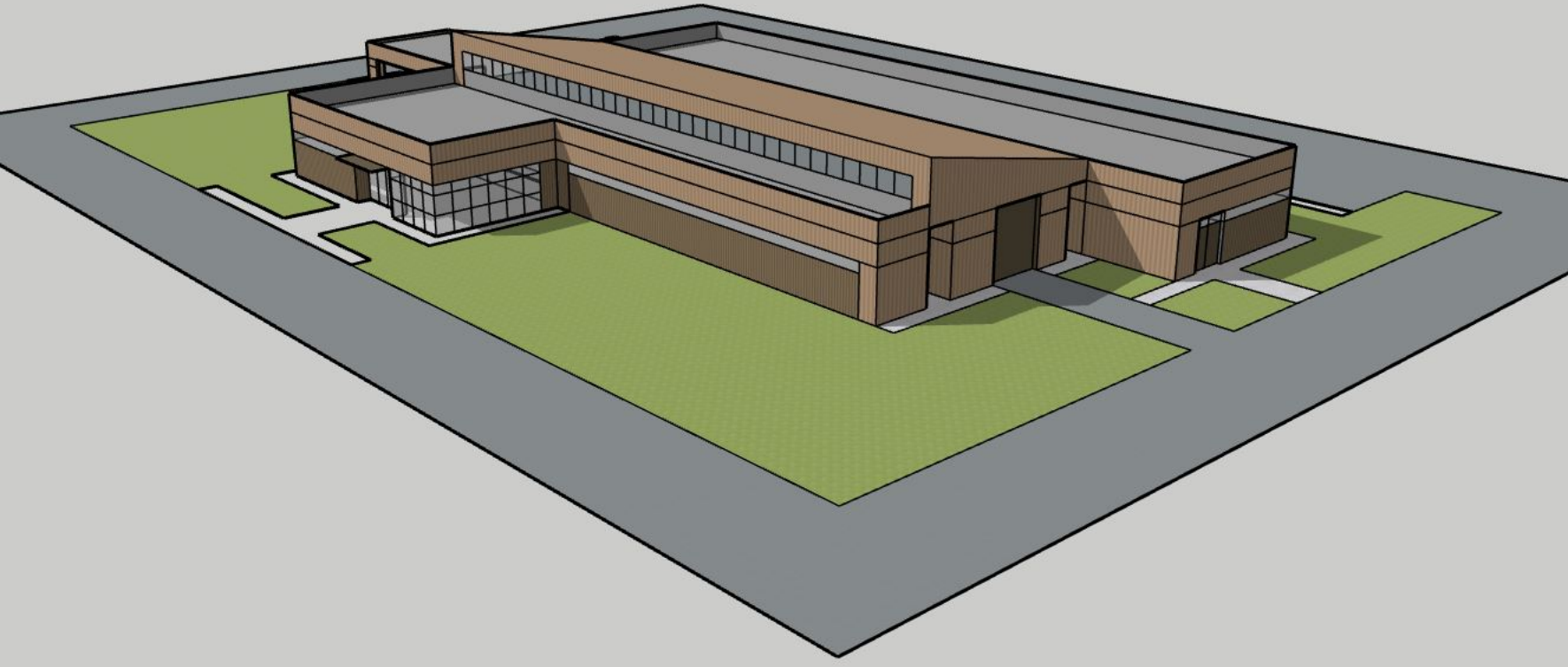

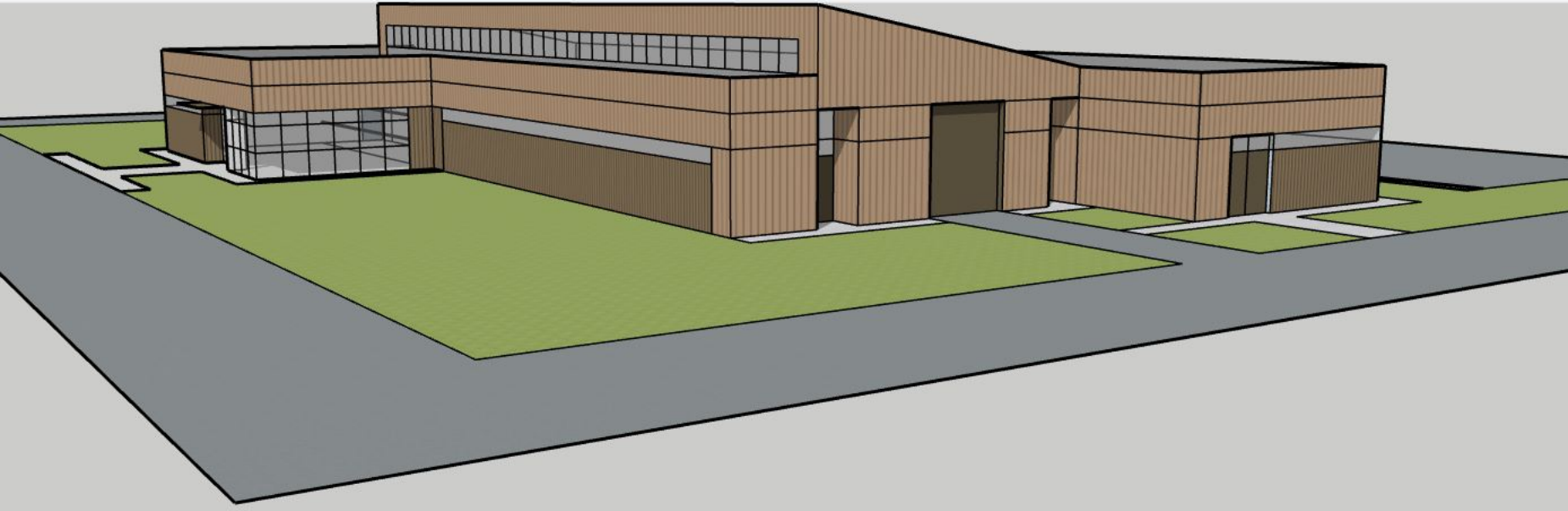

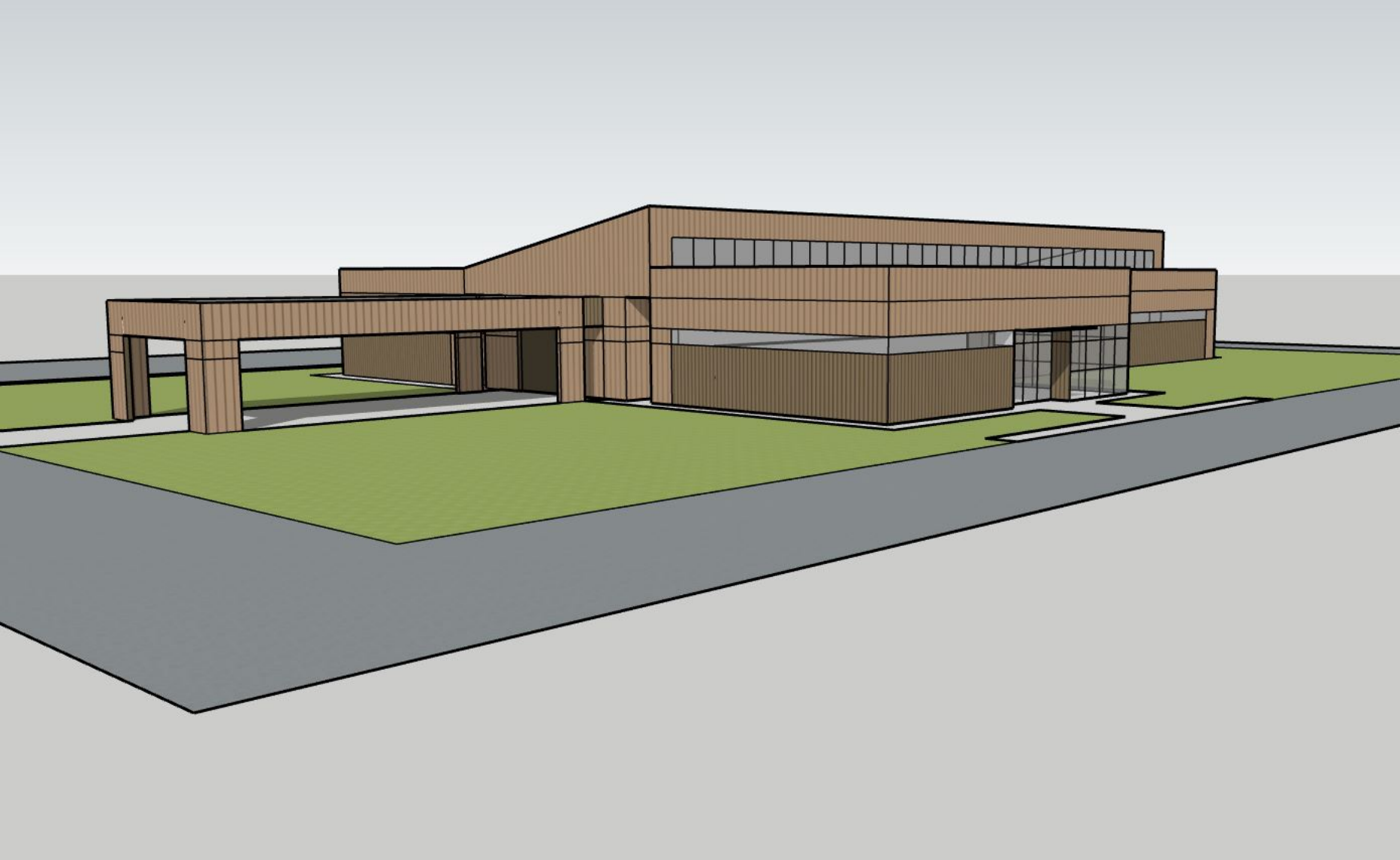

Master Plan Report

Kitsap County Public Works

Server Utility Division

Poulsbo, Washington

September 7, 2023

DRAFT

Contents

1 Section One – Project Overview 1
1.1 Introduction 1
1.2 Site Description 1
1.3 Purpose of Report 3
1.4 The Planning Team 3
1.5 Methodology 4
1.6 Report Overview 4
1.6.1 Section One - Project Overview 4
1.6.2 Section Two - Basis for Design 4
1.6.3 Section Three - Space Needs Program 4
1.6.4 Section Four - Site Master Planning Charrette (To be Developed) 5
1.6.5 Appendices 5
1.7 Acknowledgements 5
2 Section Two – Basis for Design 6
2.1 Introduction 6
2.2 Mechanics 6
2.2.1 Function 6
2.2.2 Staffing 6
2.2.3 Vehicle Parking 7
2.2.4 Key Planning Issues 7
2.3 Electrical IC 9
2.3.1 Function 9
2.3.2 Staffing 9
2.3.3 Vehicle Parking 10
2.3.4 Key Planning Issues 10
2.4 Facilities/Pump Station M&O 11
2.4.1 Function 11
2.4.2 Staffing 11
2.4.3 Vehicle Parking 12
2.4.4 Key Planning Issues 12
2.5 Operators 13
2.5.1 Function 13
2.5.2 Staffing 13
2.5.3 Vehicle Parking 14
2.5.4 Key Planning Issues 14
2.6 Parts Storeroom 15
2.6.1 Staffing 15
2.6.2 Key Planning Issues 16
3 Section Three – Space Needs Program 17
3.1 Introduction 17
3.1.1 Space Needs Office Areas 17
3.2 Vehicle Parking Summary 19
3.3 Planning Ratios 19
3.4 Space Standards 20
3.5 Circulation Factors 20

DRAFT

3.5.1 Interior or Building Circulation 20
3.5.2 Parking Circulation 21
3.5.3 Site Circulation Factor 21
3.6 Space Needs Program and Summary 21
4 Section Four – Site Master Planning Charrette 23
4.1 Introduction 23
4.1.1 Charrette Goals 23
4.2 Charrette Development 23
4.2.1 Pre-Charrette "Hot-Start" 23
4.3 Site Master Plan Charette 24
4.3.1 August 09, 2023 – Presentation One 24
4.3.2 Stakeholders Comments 35
4.3.3 Stakeholder Direction 36
4.3.4 August 09, 2023 – Presentation Two 36
4.4 Post Charrette Activities 41

Tables

Table 2-1. Mechanics Staffing 6
Table 2-2. Mechanics Fleet Vehicles 7
Table 2-3. Employee/Visitor Vehicles 7
Table 2-4. Electrical IC Staffing 10
Table 2-5. Electrical IC Fleet Vehicles 10
Table 2-6. Employee/Visitor Vehicles 10
Table 2-7. Facility Staffing 11
Table 2-8. Facilities/Pump Station M&O Fleet Vehicles 12
Table 2-9. Employee/Visitor Vehicles 12
Table 2-10. Operators Staffing 14
Table 2-11. Fleet – Operators Fleet Vehicles 14
Table 2-12. Employee/Visitor Vehicles 14
Table 2-13. Parts Storeroom Staffing 15
Table 3-1. Staffing Summary 18
Table 3-2. Parking Requirements 19
Table 3-3. Rule of Thumb Planning Ratio 19
Table 3-4. Space Standards 20

Figures

Figure 1-1. Site Map 2
Figure 1-2. Vicinity Map 3
Figure 3-1. Space Needs Program Summary 22
Figure 4-1. Concept A 26
Figure 4-2. Concept B 28
Figure 4-3. Concept C 30

DRAFT

Figure 4-4. Concept D 32
Figure 4-5. Concept E 34
Figure 4-6. Concept F 38
Figure 4-7. Concept G 40
Figure 4-8. Concept F2 43
Figure 4-9. Concept H 45
Figure 4-10. Concept H 46

Appendices

Appendix A: Space Needs Program

Appendix B: Programming Questionnaires

Appendix C: Meeting Agendas and Sign-in Sheets

Appendix D: Existing Site and Facility Plans

DRAFT

This page is intentionally left blank.

DRAFT

1 Section One – Project Overview

1.1 Introduction

The Central Kitsap Treatment Plant (CKTP) is a regional facility that provides services for the central area of Kitsap County. The treatment plant is owned, operated, and maintained by Kitsap County and provides sewer service for the cities of Poulsbo, Silverdale, Keyport, the Naval Undersea Warfare Engineering Station at Keyport, the Central Kitsap area, and the Naval Base Kitsap Bangor.

The Central Kitsap Treatment plant is home to several workgroups that support the facilities operations. To meet the growing needs of CKTP, a new maintenance building will be designed where all workgroups will be consolidated, site upgrades will be made to improve storage and parking, and existing buildings will be repurposed.

Kitsap County is looking for solutions to provide adequate workspaces for each workgroup.

The workgroups that will be included are:

- Mechanic
- Electrical/IC
- Facilities Pump Station M&O
- Operators

1.2 Site Description

The Central Kitsap Treatment Plant is located at 12351 Brownsville Highway NE in Poulsbo, Washington, occupying a parcel that is approximately 26 acres. The site is located west of Port Orchard Bay between Brownsville Highway NE and Old Military Road NE.

DRAFT

Figure 1-1. Site Map

DRAFT

Figure 1-2. Vicinity Map

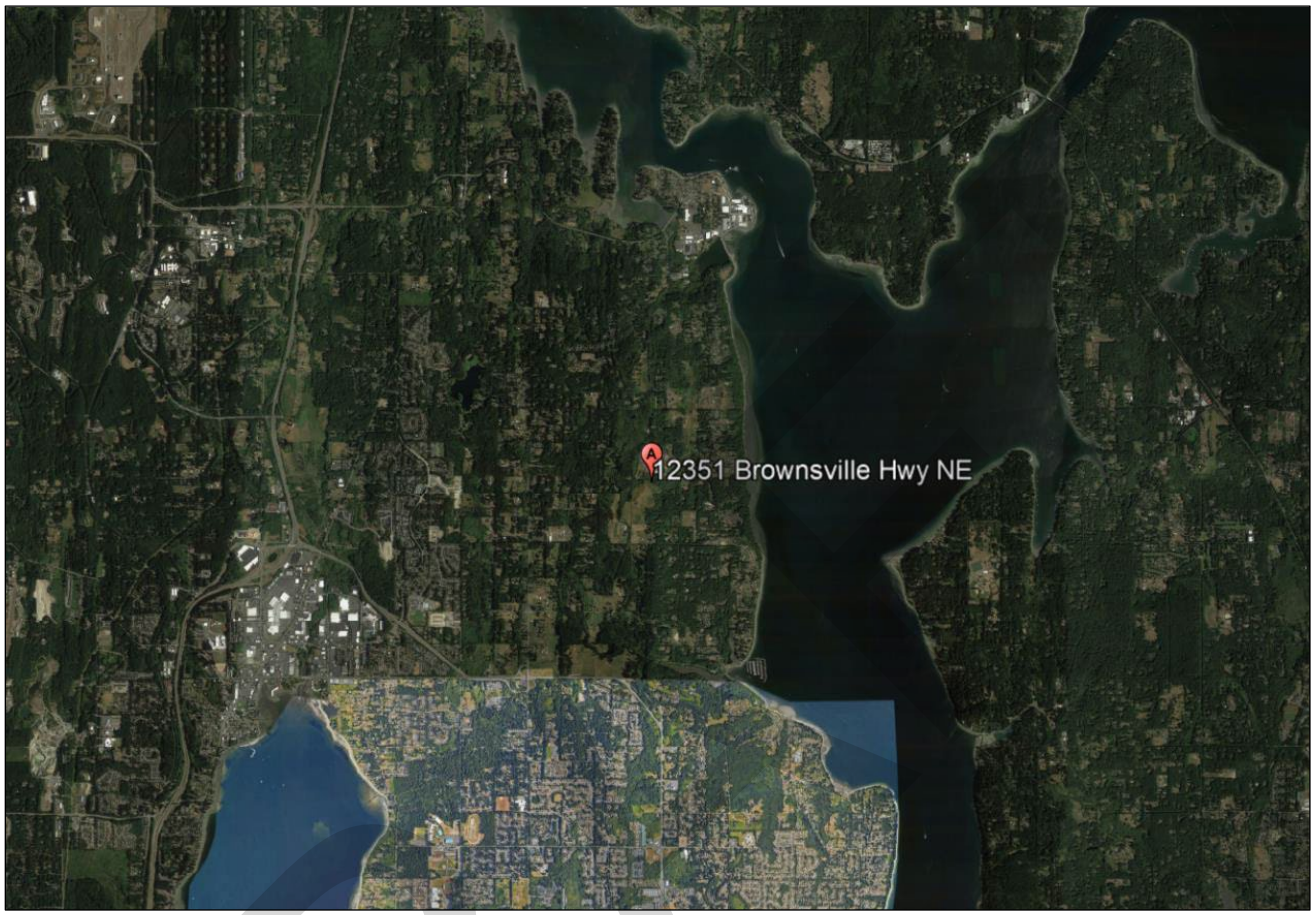

1.3 Purpose of Report

The purpose of this report is to clearly define the diverse functional requirements and area needs of the Central Kitsap Treatment Plant as a basis of design. This report shall include facility programming and needs assessment and facility site and building master plan. Furthermore, this report shall serve as a helpful tool to encourage client involvement during the review process, in addition to verification of data and assumptions.

1.4 The Planning Team

The Planning Team is composed of personnel representing various disciplines to ensure a holistic view of the master plan. Some key personnel are as follows:

- Andrew Staples – Project Manager
- Oliver Goulart Young – Facility Design
- Claudia Gonzalez – Facility Design

DRAFT

- Sheena Zimmerman – Facility Design
- Jeffrey Zahller – Design Manager
- Adam Parmenter – Plumbing
- Jeff Becker – Civil
- Mohamad Hijazi – Structural
- Karl Sutton – HVAC
- Lance Kirmeyer – Electrical
- Chan Cheang – Architecture
- Malia Bassett – Permitting
- Steve Van Loo – Project Engineer
- Donn Hogan – Architecture

1.5 Methodology

The most successful facility projects begin with gaining an understanding of the functions or operations to be performed within the facility. Therefore, the Planning Team gains valuable insight and direction that otherwise may not have been collected through less interactive programming methods. The Planning Team drew upon its involvement in numerous other bus operations and maintenance facilities efforts and utilized this background to benefit and streamline the programming and planning processes.

1.6 Report Overview

The report will consist of various sections and appendices. The following is a brief description of the contents of each section.

1.6.1 Section One - Project Overview

Describes the background of the project and gives an overview of the complete report.

1.6.2 Section Two - Basis for Design

This section summarizes the qualitative planning issues noted during meeting sessions, including additional research and continued discussion with stakeholders. Noting each workgroup utilizing the facility, this section also describes each workgroup's hours of operation, responsibilities, staffing count, vehicle parking, vehicles maintained, deficiencies, and other key planning issues for consideration during future planning and design efforts.

1.6.3 Section Three - Space Needs Program

This section presents a detailed list of space requirements for each workgroup. This program intends to identify programmed spaces to fulfill future facility needs. Spaces are further defined by their quantity, area, and any additional remarks significant to design.

DRAFT

1.6.4 Section Four - Site Master Planning Charrette (To be Developed)

Describes the project goals and addresses the issues and constraints of the site and building. This section includes a summary of the site master plan concepts, building plan concepts, and notes developed during the planning charrette workshop.

1.6.5 Appendices

The appendices include supporting data, analyses, and other resource for reference. The appendices are as follows:

- Appendix A: Space Needs Program
- Appendix B: Programming Questionnaires
- Appendix C: Meeting Agendas and Sign-in Sheets
- Appendix D: Existing Site and Facility Plans

1.7 Acknowledgements

The Planning Team would like to acknowledge the efforts and contributions of CKTP during the facility programming endeavor. Their enthusiastic and continued participation shall ensure the realization of the best Master Plan/Design conceivable.

DRAFT

2 Section Two – Basis for Design

2.1 Introduction

The purpose of Section Two – Basis for Design is to document and define the quantitative and qualitative requirements for the project to increase operational efficiency and safety of the site and facility. Additionally, this section also identifies the anticipated growth (e.g. staff, fleet vehicles, maintenance equipment, etc.) projected over the next 20 years.

2.2 Mechanics

2.2.1 Function

The mechanics workgroup is responsible for equipment rehab, repair, and rebuild as well as the fabrication, machining, and welding for general maintenance activities as it pertains to the upkeep, repair, and installation of equipment for all cities serviced by CKTP and all associated response equipment, including portable pumps and generators.

2.2.2 Staffing

The current hours of operation for Mechanics staff at the central facility are from 7:00 a.m. to 3:30 p.m., Monday through Friday. Mechanics staff often access the site after-hours to collect tools and equipment required for emergency response.

Table 2-1. Mechanics Staffing

Position	Existing Conditions	Master Plan Program	Shift	Status
M&O Supervisor	1	1	Day	Full-time
M&O Specialist	5	7	Day	Full-time
Total	**6**	**8**		
Source: Appendix A. Space Needs Program				

DRAFT

2.2.3 Vehicle Parking

Table 2-2. Mechanics Fleet Vehicles

Vehicle Type	Existing Conditions	Master Plan Program	Size (feet)
Extra Small	0	1	8 x 15
Small	9	12	10 x 25
Medium	6	6	12 x 30
Extra Large	4	4	12 x 40
3X Large	1	1	12 x 60
Total	**20**	**24**	

Source: Appendix A. Space Needs Program

Table 2-3. Employee/Visitor Vehicles

Vehicle Type	Existing Conditions	Master Plan Program	Size (feet)
Employee	6	8	9 x 18
Visitor	0	1	9 x 18
Accessible	0	1	13 x 18
Total	**6**	**10**	

Source: Appendix A. Space Needs Program

2.2.4 Key Planning Issues

The following are planning issues to be addressed during the site master planning process for the mechanic workgroup.

Office Areas

- Provide private office for M&O supervisor with space for workstation, shelving, cabinet, and a locker.
- M&O Specialists shall have a shared office space with individual workstations equipped with file cabinets, desk, chair, bookcase, and space divider.
- Provide spare workstation(s) for guest(s) and for common use and meetings.

DRAFT

Shared Office Areas

- Provide Break Room with kitchenette, furnished with tables, chairs, refrigerators, microwaves, water cooler, ice machine, and coffee bar. Area to be shared with other workgroups.
- Provide Copy/Workroom/Supplies for storage of general office supplies. Locate near office area.
- Provide Small Conference Room teleconferencing capabilities, standard conference table and chairs.
- Provide Training Room equipped with standard tables and chairs, large wall-mounted monitor, and instructor workstation located near primary monitor. Area to be shared with all workgroups.

Support Areas

- Provide Men's Lockers for full-time staff members. Assigned lockers shall be full size. Combined and shared with all other workgroups.
- Provide Men's Restroom/Shower as required per Code.
- Provide Women's Lockers for full-time staff members. Assigned Lockers shall be full size, combined and shared with all other workgroups.
- Provide Women's Restroom/Shower as required per Code.
- Provide Mud Room adjacent to Locker Room with a space to wash off debris, coat hooks to hang wet foul weather gear, and a bench to change boots. Provide adequate ventilation to dry gear so that it is ready for the next morning. Area to be shared with all workgroups.
- Provide Laundry Room with industrial washer and dryer for washing clothes used by workgroups. Provide separate washer for contaminated clothes. Area to be shared with all workgroups.

Storage Areas

- Provide Custodial Room with mop sink, shelving, and storage for building functions.

Shop Areas

- Provide Mechanics Shop configured with a SCADA monitor, vehicular access, equipment loading bay, prep/cleaning area, 5-ton bridge crane, 5-ton jib crane, workbenches, drill press, parts cleaner, blast cabinet, lathe, pipe threader, and portable equipment storage.
- Provide Welding/Fabrication Shop for aluminum and stainless steel equipped with welders, brake, bender, roller, fume extraction arms, plasma cutter, CNC plasma table, and welding table.
- Provide Computer Room to support computer automated equipment. Locate inside Welding/Fabrication Shop.

DRAFT

Storage Areas

- Provide Lube/Compressor Room configured with space for compressor, dryer, receiver, and fluid tanks.
- Provide Temporary Equipment Storage for parts awaiting replacement.
- Provide Miscellaneous Shop/Storage equipped for storage of small, miscellaneous items received from Parts Storeroom. Provide racks and shelving units.
- Provide Steel Storage space sized for storage of 10-foot long steel, 20-foot long heavy beams, and a dedicated enclosed area for bulk steel storage, arm racks, and vertical sheet racks.
- Provide area for Portable Equipment Storage inside Shop.
- Provide Equipment Loading Bay to load vehicles with necessary equipment and tools for field work. Located adjacent to Shop.
- Provide Manuals Library adjacent to shop area equipped with computer workstation and storage for equipment manuals.
- Provide Secured Tool Equipment Storage with racks and lockable shelving units to store high valued tools.

Truck/Equipment Wash Area

- Provide Wash Bay with manual hot water and high-pressure vehicle/equipment wash.
- Provide Wash Equipment Room with water reclamation.

Covered Material Storage

- Provide Miscellaneous Shop Storage with racks and shelving units for pipes, small parts, and miscellaneous items received from Parts Storeroom. Locate inside Mechanics Shop.

2.3 Electrical IC

2.3.1 Function

The Electrical IC workgroup is responsible for the installation, maintenance, calibration, and repair of electrical, instrumentation, and computer-aided operating systems for the various locations under the Kitsap County Wastewater network.

2.3.2 Staffing

The current hours of operation for Electrical IC staff at the central facility are from 7:00 a.m. to 3:30 p.m., Monday through Friday. Electrical IC staff only access the site after-hours during call-out events.

DRAFT

Table 2-4. Electrical IC Staffing

Position	Existing Conditions	Master Plan Program	Shift	Status
Electrician IC Supervisor	1	1	Day	Full-time
Electrician	2	4	Day	Full-time
Instrument & Control (IC) Technician	3	4	Day	Full-time
Total	**6**	**9**		

Source: Appendix A. Space Needs Program

2.3.3 Vehicle Parking

Table 2-5. Electrical IC Fleet Vehicles

Vehicle Type	Existing Conditions	Master Plan Program	Size (feet)
Small	4	7	10 x 25
Total	**4**	**7**	

Source: Appendix A. Space Needs Program

Table 2-6. Employee/Visitor Vehicles

Vehicle Type	Existing Conditions	Master Plan Program	Size (feet)
Employee	6	9	9 x 18
Visitor	0	0	9 x 18
Accessible	0	0	13 x 18
Total	**6**	**9**	

Source: Appendix A. Space Needs Program

2.3.4 Key Planning Issues

Administrative Office Areas

- Provide private office for Electrician IC Supervisor with space for workstation, shelving, cabinet, and a locker.
- Provide open office configuration with workstations for Electricians and IC Technicians near Electrician Shop. Provide workstations, task chairs, and file storage cabinets/drawers.

DRAFT

Shared Office Areas

- Provide Copy/Workroom/Supplies for storage of general office supplies. Locate near office area.
- Provide Small Conference Room teleconferencing capabilities, standard conference table and chairs.

Shop Areas

- Provide climate-controlled Instrument Calibration Shop adjacent to Mechanics Shop.
- Provide Electric Shop adjacent to the server room equipped with a SCADA monitor, a static-proof table with shelf, 120v, 480v, 24v outlets and a soldering/engraving station with SCADA connection.

Storage Areas

- Provide Secured Tool Storage with racks and lockable shelving units to store high valued tools.

2.4 Facilities/Pump Station M&O

2.4.1 Function

CKTP Facility Operations is responsible for routinely inspecting and cleaning equipment and making necessary repairs.

2.4.2 Staffing

The current hours of operation for Facilities/Pump Station M&O staff at the central facility are from 7:00 a.m. to 3:30 p.m., Monday through Friday. Facilities/Pump Station M&O staff only access the site after-hours during call-out events.

Table 2-7. Facility Staffing

Position	Existing Conditions	Master Plan Program	Shift	Status
Facility/Pump Station M&O Crew Supervisor	1	1	Day	Full-time
Facility M&O Specialists	5	7	Day	Full-time
Total	**6**	**8**		
Source: Appendix A. Space Needs Program				

DRAFT

2.4.3 Vehicle Parking

Table 2-8. Facilities/Pump Station M&O Fleet Vehicles

Vehicle Type	Existing Conditions	Master Plan Program	Size (feet)
Small	4	6	10 x 25
Medium	4	5	12 x 30
Large	4	5	12 x 35
2X Large	1	1	12 x 45
Total	**13**	**17**	
Source: Appendix A. Space Needs Program			

Table 2-9. Employee/Visitor Vehicles

Vehicle Type	Existing Conditions	Master Plan Program	Size (feet)
Employee	6	8	9 x 18
Visitor	0	0	9 x 18
Accessible	0	0	13 x 18
Total	**6**	**8**	
Source: Appendix A. Space Needs Program			

2.4.4 Key Planning Issues

Administrative Office Areas

- Provide private office for Facility/Pump Station M&O Crew Supervisor with space for workstation, shelving, cabinet, and a locker.
- Provide open office configuration with workstations for Facility M&O Specialists near Facilities Shops. Provide workstations, task chairs, and file storage cabinets/drawers.

Shared Office Areas

- Provide Copy/Workroom/Supplies for storage of general office supplies. Locate near office area.
- Provide Small Conference Room teleconferencing capabilities, standard conference table and chairs.

Storage Areas

- Provide Secure File Storage equipped with shelves and cabinets.

DRAFT

Shop Areas

- Provide Multi-Purpose Shop equipped with the following items:
  - Provide Equipment Repair Shop with workbenches, vises, tool sharpener, shelving, compressed air, lawn mower lift.
  - Provide Small Engine Repair Shop with a SCADA monitor, workbenches, shelving, racks, compressed air, crane coverage.
  - Provide Carpentry Shop equipped with workbenches, saws, sanders, and other wood working equipment for special projects. Can be combined with Equipment/Small Engine Repair Shop.
- Provide Painting Room adjacent to Carpentry Shop for touch ups and repainting of repaired equipment.

Storage Areas

- Provide secured/caged area for Tool Storage with racks and lockable shelving units to store high valued tools.

Covered Storage Areas

- Provide Groundskeeping Equipment Storage for fuel storage.

Exterior Storage Areas

- Provide Exterior Storage for Emergency Generator, Scrap Metal Recycling, Cardboard Recycling, Trash/Garbage Disposal Area, and Hazardous Material Storage.

2.5 Operators

2.5.1 Function

The Operators Workgroup is responsible for overall plant operations and the storage and handling of chemicals required for maintaining wastewater treatment quality levels.

2.5.2 Staffing

The current hours of operation for Operators staff at the central facility are from 7:00 a.m. to 3:30 p.m., Monday through Sunday. Supervisor is at the facility Monday through Friday; Operators have two shift schedules. One shift operates the facility Monday through Friday, another covers three weekdays and the weekend. Access to the plant is required after-hours for Sheriff and other County staff to access fueling stations, and Septage receiving is open until 5:00 pm, Monday through Friday.

DRAFT

Table 2-10. Operators Staffing

Position	Existing Conditions	Master Plan Program	Shift	Status
Plant Supervisor	1	1	Day	Full-time
Operator	6	8	Swing	Full-time
M&O Worker / Trainee	1	1	Swing	Full-time
Total	**8**	**10**		

Source: Appendix A. Space Needs Program

2.5.3 Vehicle Parking

Table 2-11. Fleet – Operators Fleet Vehicles

Vehicle Type	Existing Conditions	Master Plan Program	Size (feet)
Extra Small	1	2	8 x 15
Medium	1	2	12 x 30
Employee	24	27	9 x 18
Visitor	2	5	9 x 18
Accessible	0	2	13 x 18
Total	**28**	**38**	

Source: Appendix A. Space Needs Program

Table 2-12. Employee/Visitor Vehicles

Vehicle Type	Existing Conditions	Master Plan Program	Size (feet)
Employee	8	10	9 x 18
Visitor	0	0	9 x 18
Accessible	0	0	13 x 18
Total	**8**	**10**	

Source: Appendix A. Space Needs Program

2.5.4 Key Planning Issues

The following are planning issues to be addressed during the site master planning process for the Operators workgroup.

DRAFT

Office Areas

- Provide private office for Plant supervisor with space for workstation, shelving, cabinet, and a locker.
- Provide an open office space for Operators and M&O Worker/Trainee with individual workstations equipped with file cabinets, desk, chair, bookcase, and space divider.

Shared Office Areas

- Provide Copy/Workroom/Supplies for storage of general office supplies. Locate near office area.

Support Areas

- Provide Men's Lockers for full-time staff members. Assigned Lockers shall be full size; combined and shared with all other workgroups.
- Provide Men's Restroom/Shower as required per Code.
- Provide Women's Lockers for full-time staff members. Assigned Lockers shall be full size, combined and shared with all other workgroups
- Provide Women's Restroom/Shower as required per Code.

Shop Areas

- Provide a Control Room with tables, chairs, printer, and space for SCADA monitors.
- Provide Process Lab with two workstations, and bench equipment for process/operator performed lab tests.
- Provide Exterior Storage area for used polymer drums.

2.6 Parts Storeroom

The Parts Storeroom is responsible for storing and managing inventory of all parts required for use at CKTP.

2.6.1 Staffing

There is currently no dedicated staff assigned to the Parts Storeroom. CKTP staff will check out inventory and order new parts.

Table 2-13. Parts Storeroom Staffing

Position	Existing Conditions	Master Plan Program	Shift	Status
Clerk	0	0	Day	Full-time
Total	**0**	**0**		

Source: Programming Interview

DRAFT

2.6.2 Key Planning Issues

Office and Storage Areas

- Provide one workstation with desk, computer, printer, chair, for parts check out and new orders.
- Provide Shipping and Receiving Area to stage and process supplies. Locate adjacent to Loading Dock.
- Provide Loading Dock Area to load/unload materials.
- Provide Kitting Area configured with bins to organize upcoming projects (seven-day holding, minimum).
- Provide Returns Area designated to process parts and tools to be returned.
- Provide Small Parts Storage equipped with a mix of storage racks (e.g., shelving units, etc.)
- Provide Large Parts Storage equipped with a mix of storage racks (e.g., bulk racks, pallet racks, etc.),
- Provide climate-controlled Lab/IC Storage for storage of 12 poles, controls, floats (6 feet by 6 feet by 12 feet), PC peripherals, spools, cables, and PLC/IO storage.
- Provide Drum Storage for 10 55-gallon drums to serve equipment; Provide secondary containment.
- Provide Secured Tool Storage with racks and lockable shelving units to store high-valued tools.

DRAFT

3 Section Three – Space Needs Program

3.1 Introduction

This section presents the Space Needs Program for CKTP. The Space Needs Program illustrates the space requirements for the efficient operations for this facility. This section also discusses the various factors, e.g., site access, landscaping, setbacks, etc., used to determine the overall acreage to implement the program.

3.1.1 Space Needs Office Areas

Staffing

Staffing levels are crucial to planning efforts when determining the number of parking spaces, size of support facilities, and developing occupancy levels. The following is the summary of staffing levels for each workgroup, initially for a current fleet and a future projected fleet. These staffing projections were obtained directly from interview sessions and the Planning Team's knowledge of CKTP. Refer to Section Two – Basis of Design and Appendix A. Space Needs Program for a more detailed breakdown of each workgroup's staff.

DRAFT

Table 3-1. Staffing Summary

table units

Position	Existing Conditions	Master Plan (2043)	Shift	Status
Mechanics				
M&O Supervisor	1	1	Day	Full-time
M&O Specialist	5	7	Day	Full-time
Subtotal	**6**	**8**		
Electrical IC				
Electrician IC Supervisor	1	1	Day	Full-time
Electrician	2	4	Day	Full-time
Instrument & Control (IC) Technician	3	4	Day	Full-time
Subtotal	**6**	**9**		
Facility				
Facility/Pump Station M&O Crew Supervisor	1	1	Day	Full-time
Facility M&O Specialists	5	7	Day	Full-time
Subtotal	**6**	**8**		
Operators				
Plant Supervisor	1	1	Day	Full-time
Operator	6	8	Swing	Full-time
M&O Worker / Trainee	1	1	Swing	Full-time
Subtotal	**8**	**10**		
Parts Storeroom				
Clerk	0	0	--	--
Subtotal	**0**	**0**		
Total	**26**	**35**		

Source: Table Source/Note

DRAFT

3.2 Vehicle Parking Summary

Table 3-2. Parking Requirements

Vehicle Type	Existing Conditions	Master Plan	Size (feet)	Parking Requirements
Non-Revenue Fleet				
Extra Small	1	3	8 x 15	Varies
Small	17	25	10 x 25	Varies
Medium	11	13	12 x 30	Varies
Large	4	5	12 x 35	Enclosed
Extra Large	4	4	12 x 40	Varies
2X Large	1	1	12 x 45	Covered
3X Large	1	1	12 x 60	Covered
Subtotal	**39**	**52**		
Employee/Visitor Parking				
Employee	26	35	9 x 18	Uncovered
Visitor	0	1	9 x 18	Uncovered
Accessible	0	1	13 x 18	Uncovered
Subtotal	**26**	**37**		
Total	**65**	**89**		

Source: Appendix A. Space Needs Program
[a] Small vehicles include Sedans, Pickups, and Work trucks.
[b] Multiple requirements per workgroup. Reference Space Needs Program

3.3 Planning Ratios

The material handling ratios are indicated in the following Table 3-3. Rule of Thumb Planning Ratio.

Table 3-3. Rule of Thumb Planning Ratio

Space	Ration or Space Standards
Materials Handling (Parts Storage)	150 SF for every 900 SF of Large Parts Storage area (based on use of some high density storage systems and mezzanine area)
Materials Handling (Large Parts Storage)	210 SF per pallet rack (based on final parts room configuration)

Source: Appendix A: Space Needs Program
[a] Square Feet (SF)

DRAFT

3.4 Space Standards

Space standards were applied to the Space Needs Program and generally apply to the Offices, Shops, and Vehicle Parking Areas. Area requirements in Shops and Storage Areas were derived from functional requirements and equipment space needs. The space standards listed below were utilized to develop the facility program and overall area requirements. The space standards are based on functional needs and requirements established through the design of other facilities, rules of thumb, and specific requirements of each functional group. The office area standards are as follows:

Table 3-4. Space Standards

Area	Size
Office	
Private Office	120 SF office
Workstation	64 SF workstation
Parking	
Extra Small	120 SF (8 x 15)
Small	250 SF (10 x 25)
Medium	360 SF (12 x 30)
Large	480 SF (12 x 40)
2X Large	540 SF (12 x 45)
3X Large	780 SF (12 x 65)
Employee Vehicles	162 SF (9 x 18)
Visitor Vehicles	162 SF (9 x 18)
Accessible Parking	234 SF (13 x 18)

Source: Appendix A: Space Needs Program
[a] Square Feet (SF)

3.5 Circulation Factors

The space requirements shown for each function are net usable area. By using the urban design approach to this development of the facility, the HDR Planning Team hopes to minimize the amount of circulation necessary for an efficient facility. There are three Circulation Factors utilized in the Space Needs Program. These factors are Interior or Building Circulation, Parking Circulation, and Site Circulation Factor.

3.5.1 Interior or Building Circulation

This factor is applied to the program as a percentage of the total building square footage. It accounts for miscellaneous building spaces such as hallways, stairwells, custodial closets, mechanical, plumbing, and electrical rooms, wall thickness, structure

DRAFT

(Circ/Mech/Elec/Struct - Net:Gross), and access requirements. The following is a list of the factors (in general) that have been applied to the program:

Administrative Office Areas	40%
Training and Education Area	40%
Maintenance Office Areas	40%
Maintenance Support Areas	40%
Shop and Bay Areas	20%
Covered Service Areas	10%
Service Areas	10%

3.5.2 Parking Circulation

This factor is included to account for the drive aisles, walkways, islands, and other areas created by site and access inefficiencies. This factor can vary from 15 to 100 percent of the actual space occupied by a vehicle. For this project the following factors were applied:

Vehicle Parking Areas	100%

3.5.3 Site Circulation Factor

This factor is also applied to the program as a percentage of the total program square footage. It accounts for areas around buildings, site drive aisles, building access, and site access. For new construction, a 100 percent factor is normally applied to account for all site inefficiencies. As such, the better the site conditions, access, easement, etc., the more efficient the site layout can become, reducing this factor to as low as 50 percent.

3.6 Space Needs Program and Summary

A summary of the Space Needs Program for CKTP is provided in Figure 3-1. Space Needs Program Summary. This summary table includes projected square footage needs for building areas, covered areas, exterior areas, and parking areas. These projected space needs are subtotaled into net square footage requirements and converted to the total site acreage requirements for the redeveloped facility and any potential residual land area. Site circulation, landscaping requirements, and total acres required are also shown.

The Space Needs summary includes projected square footages for the proposed new buildings.

The detailed Space Needs Program Summary begins with the identification of each space by name and a space standard (if applicable). The 20+ Year Program column represents spaces required to accommodate the fleet inclusively and operation for the Master Plan build out.

The Space Needs Program is used by the Planning Team to develop site master plans and conceptual building plans for the new facilities to be developed and described in *Chapter Four - Master Planning Charrette*.

DRAFT

Figure 3-1. Space Needs Program Summary

Kitsap (CKTP) Solids and Liquid Hauled Waste Upgrades — **BUILDING AREAS** — Summary Space Needs Program — September 7, 2023

	Office and Office Support				Shop and Shop Storage				Enclosed Vehicle Parking				Division/Agency Totals			
Workgroups	**2023**	**2028**	**2033**	**2043**	**2023**	**2028**	**2033**	**2043**	**2023**	**2028**	**2033**	**2043**	***2023***	***2028***	***2033***	***2043***
Mechanics	484	5,807	5,958	**5,987**	6,338	15,096	15,096	**15,096**	10	10	10	10	***6,832***	***20,914***	***21,064***	***21,093***
Electrician IC	864	1,651	1,769	**1,769**	810	2,636	2,636	**2,636**	3	5	6	6	***1,677***	***4,292***	***4,411***	***4,411***
Facilities/Pump Station M&O	240	1,528	1,618	**1,707**	436	3,161	3,161	**3,161**	4	4	5	5	***680***	***4,693***	***4,784***	***4,873***
Operators	0	0	0	**0**	0	0	0	**0**	0	0	0	0	***0***	***0***	***0***	***0***
Parts Storeroom	0	0	0	**380**	0	10,423	10,423	**10,423**	0	0	0	0	***0***	***10,423***	***10,423***	***10,803***
Subtotal	**1,588**	**8,987**	**9,345**	**9,843**	**7,584**	**31,316**	**31,316**	**31,316**	**17**	**19**	**21**	**21**	**9,189**	**40,322**	**40,682**	**41,180**

TOTAL SQUARE FEET - BUILDING AREAS	**9,189**	**40,322**	**40,682**	**41,180**

Kitsap (CKTP) Solids and Liquid Hauled Waste Upgrades — **SITE AREAS** — Summary Space Needs Program — September 7, 2023

	Covered Material Storage				Exterior Material Storage				Employee and Visitor Parking				Division/Agency Totals			
Workgroups	**2023**	**2028**	**2033**	**2043**	**2023**	**2028**	**2033**	**2043**	**2023**	**2028**	**2033**	**2043**	***2023***	***2028***	***2033***	***2043***
Mechanics	990	1,403	1,403	**1,403**	18,800	7,500	7,500	**7,500**	6	9	10	10	***19,796***	***8,912***	***8,913***	***8,913***
Electrician IC	0	0	0	**0**	0	0	0	**0**	6	8	9	9	***6***	***8***	***9***	***9***
Facilities/Pump Station M&O	331	431	431	**431**	400	2,320	2,320	**2,320**	6	6	7	8	***737***	***2,757***	***2,758***	***2,759***
Operators	0	0	0	**0**	0	0	0	**0**	0	0	0	0	***0***	***0***	***0***	***0***
Parts Storeroom	0	0	0	**0**	0	0	0	**2,800**	0	0	0	0	***0***	***0***	***0***	***2,800***
Subtotal	**1,321**	**1,834**	**1,834**	**1,834**	**19,200**	**9,820**	**9,820**	**12,620**	**18**	**23**	**26**	**27**	**20,539**	**11,677**	**11,680**	**14,481**

TOTAL SQUARE FEET - SITE AREAS	**20,539**	**11,677**	**11,680**	**14,481**

	2023	**2028**	**2033**	**2043**
TOTAL SQUARE FEET - BUILDING AREAS	9,189	40,322	40,682	41,180
TOTAL SQUARE FEET - SITE AREAS	20,539	11,677	11,680	14,481
SUBTOTAL SITE SQUARE FEET	29,728	51,998	52,361	55,661
Site Circulation, Landscaping and Setbacks 100%	29,728	51,998	52,361	55,661
TOTAL SITE SQUARE FEET	59,456	103,997	104,723	111,322
TOTAL SITE ARCEAGE	**1.36**	**2.39**	**2.40**	**2.56**

DRAFT

4 Section Four – Site Master Planning Charrette

4.1 Introduction

The purpose of this section is to illustrate the Master Plan process and the concepts developed using information presented in Section Three – Space Needs Program. These master plan concepts were created during an internal “Hot-Start” workshop and on-site design workshop “Charrette” held with the CKTP Stakeholders and the Planning Team.

4.1.1 Charrette Goals

The Planning Team identified several goals that have been addressed in the Site Master Plan concepts. These goals guided the direction of the Planning Team as they developed each concept. The goals established for this effort are as follows:

- Maximize open space within project boundary
- Promote vehicular and pedestrian connectivity throughout new site boundary
- Consolidate existing storage areas into a secured area accessible to all workgroups within the proposed Maintenance Building
- Provide shared spaces to accommodate all workgroups.
- Improve inter-workgroup interactions and adjacencies to reduce downtime

4.2 Charrette Development

4.2.1 Pre-Charrette "Hot-Start"

The Pre-Charrette Hot-Start Activities took place between July 31st and August 8th at the HDR Bellevue office. The activities began by taking a closer look at the Space Needs Program and quantitative information validated during the programming interviews. It was important for the Planning Team to take a closer look at the site and identify all access points and roads for circulation. The Planning Team also looked at information regarding the topography and identified areas in the parcel that could pose challenges. Several design possibilities were considered, and five hot-start concepts were produced.

All five concepts developed meet the established Maintenance Building program requirements as a new single-story construction. The primary vehicular access to the Maintenance Building parcel for all concepts is at the existing locked entrance southeast of the main plant entrance. The primary access also serves as the exit point for all fleet, employee, and delivery vehicles. Option B is the only concept with an internal access road that connects to the southwest parts of the parcel and to the existing plant internal circulation.

DRAFT

4.3 Site Master Plan Charette

The Master Plan Charette took place on Wednesday August 9, at the Central Kitsap Water Treatment Plant. Both the Planning Team and CKTP staff participated in the Site Master Plan Charette in person. This exercise is used by the Planning Team to develop various site concepts and present to the key stakeholders of the facility. Through this interactive work session, stakeholders can provide immediate feedback for the various concepts to the Planning Team, which is critical to the early planning and design of the facility.

The following Concepts were presented during the morning and afternoon presentations:

4.3.1 August 09, 2023 – Presentation One

The Planning Team began by first presenting the initial concepts, which were developed during the Pre-Charrette “Hot-Start”.

The following concepts were presented during the morning stakeholder meeting:

Concept A (See Figure 4-1)

- Mechanics
  - Located in the northwest corner of the proposed Maintenance Building, parallel to the fire lane that runs along the west parcel boundary
  - Detached Wash Building located between the eastern fire lane and parcel boundary
- Facilities/Pump Station M&O
  - Located on the northeast corner of the proposed Maintenance Building and south of Brownsville Highway
  - The Facilities Workgroup has direct access to the fire lane on the south and west of the project boundary
- Electrician IC
  - Located at the center of the proposed Maintenance Building, attached to the east side
- Operators
  - Located on the east side of the proposed Maintenance Building
  - The Operators workgroup is parallel to the fire lane on the east side

DRAFT

- Parts Storeroom
  - Located south of the Mechanics Workgroup
  - The Parts Storeroom has direct access to the fire lane on the south and west
  - Loading dock area is attached to the southern exterior wall of the Parts Storeroom
- Fleet Parking
  - Enclosed and Covered Parking areas located south of the Maintenance Building
  - Uncovered parking located on the exterior south side of the Electrician IC Workgroup
- Employee/Visitor Parking
  - Employee/Visitor Parking is located north of the Maintenance Building and directly off the primary access to south of Brownsville Highway

DRAFT

Figure 4-1. Concept A

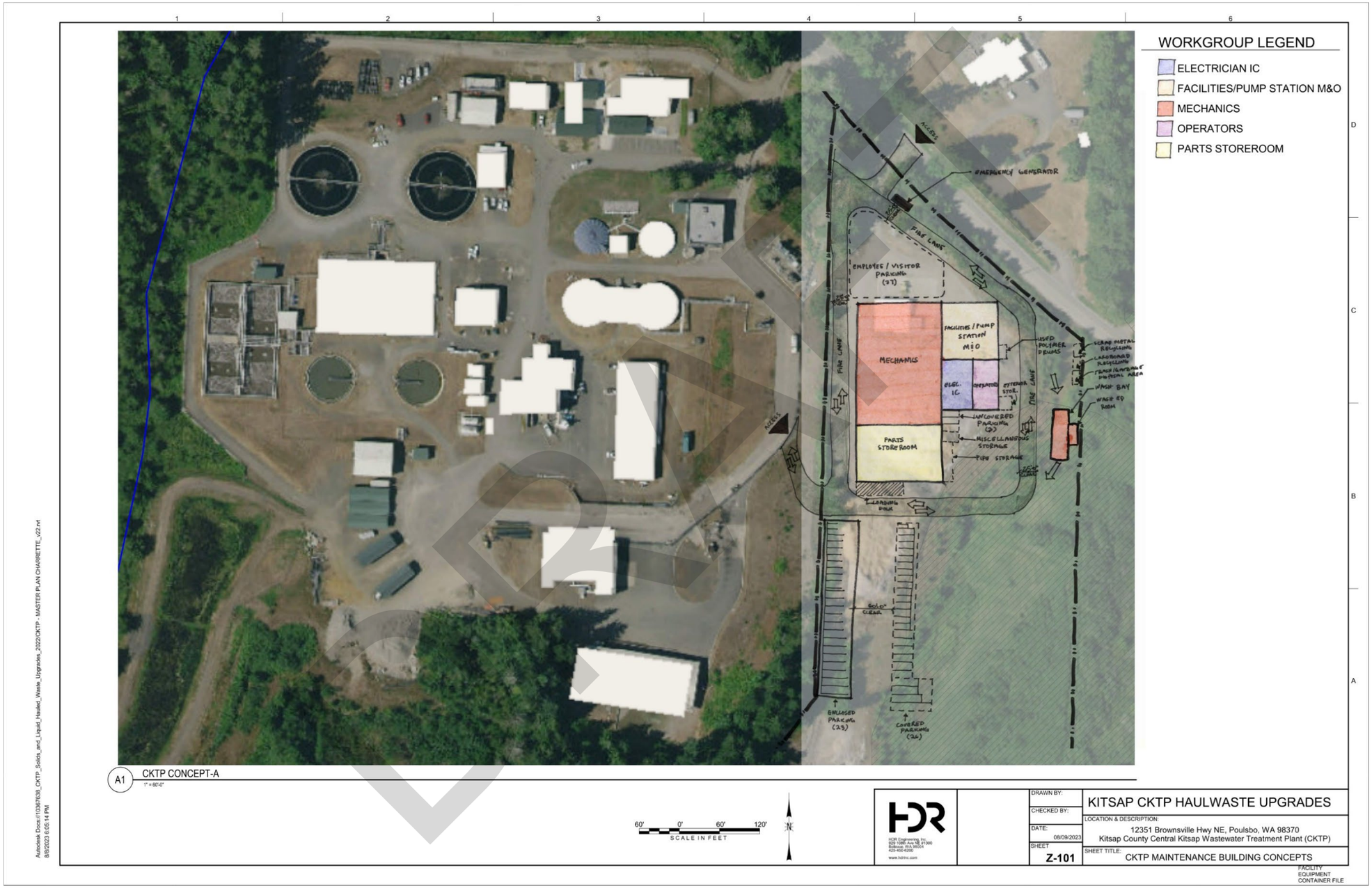

Concept B (See Figure 4-2)

- Mechanics
  - Located in the center of the proposed Maintenance Building
- Facilities/Pump Station M&O
  - Located northwest of the proposed Maintenance Building and attached on the east side of the Mechanics Workgroup
- Electrician IC
  - Located north of the proposed Maintenance Building
- Operators
  - Located south of the proposed Maintenance Building and attached to the south side of Mechanics Workgroup
- Parts Storeroom
  - Located northeast of the proposed Maintenance Building and attached to the Electrician IC Workgroup on the west and the Mechanics Workgroup on the south of the storeroom
  - Parts Storeroom has direct access to the fire lane on the north and east sides
  - Loading dock is attached on the exterior of the Parts Storeroom on the northwest side
- Fleet Parking
  - Enclosed parking connected on the southeast side of the Mechanics Workgroup
  - Covered parking area located in the wetlands southeast of project boundary
  - Uncovered parking located on the exterior east side of the Parts Storeroom and Mechanics Workgroup
- Employee/Visitor Parking
  - Employee/Visitor Parking is located northwest of the project boundary directly off the primary access entry and south of Brownsville Highway

DRAFT

Figure 4-2. Concept B

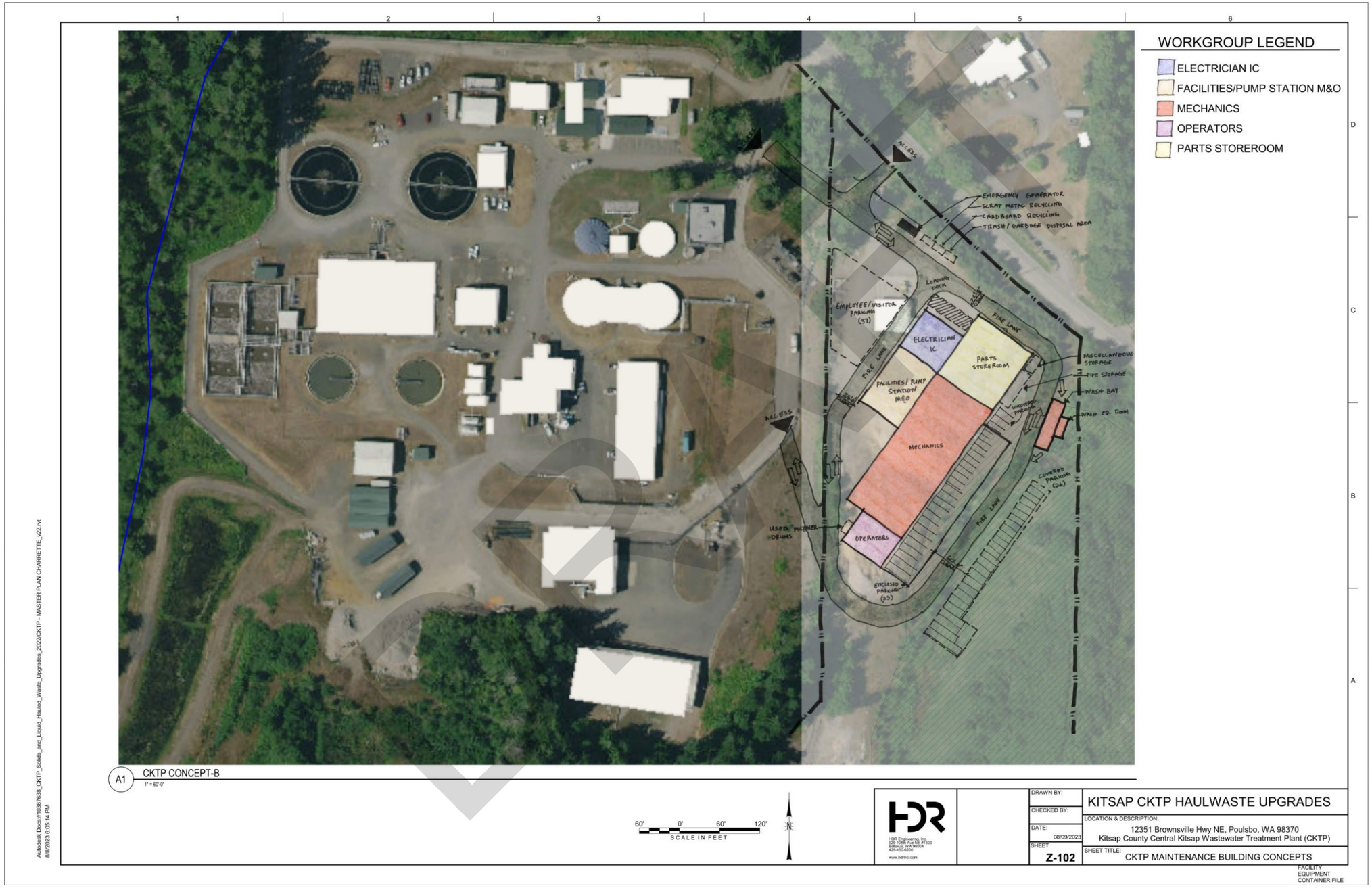

Concept C (See Figure 4-3)

- Mechanics
  - Located on the northeast section of the site, south of the employee/visitor parking
- Facilities/Pump Station M&O
  - Located at the center of the proposed Maintenance Building and attached on the south side of the Parts Storeroom and Mechanics Workgroup
- Electrician IC
  - Located at the center of the proposed Maintenance Building, south of the Facilities/Pump Station M&O Workgroup and north of the Operators Workgroup
- Operators
  - Located at the center of the proposed Maintenance Building, attached to the south side of the Electrician IC Workgroup and south of the enclosed and covered parking areas
- Parts Storeroom
  - Located northwest of the proposed Maintenance Building and attached to the Mechanics Workgroup on the east
  - Located south of the employee/visitor parking
  - Parallel to fire lane on the west of the Parcel Boundary
  - Loading dock is attached on the exterior south side of the Parts Storeroom
- Fleet Parking
  - Enclosed parking located south of the project boundary
  - Covered parking area located in the wetlands southeast of project boundary
  - Uncovered parking located on the southeast corner of the Mechanics Workgroup
- Employee/Visitor Parking
  - Employee/Visitor Parking is located north of the project boundary and directly off the primary access entry to the south of Brownsville Highway

DRAFT

Figure 4-3. Concept C

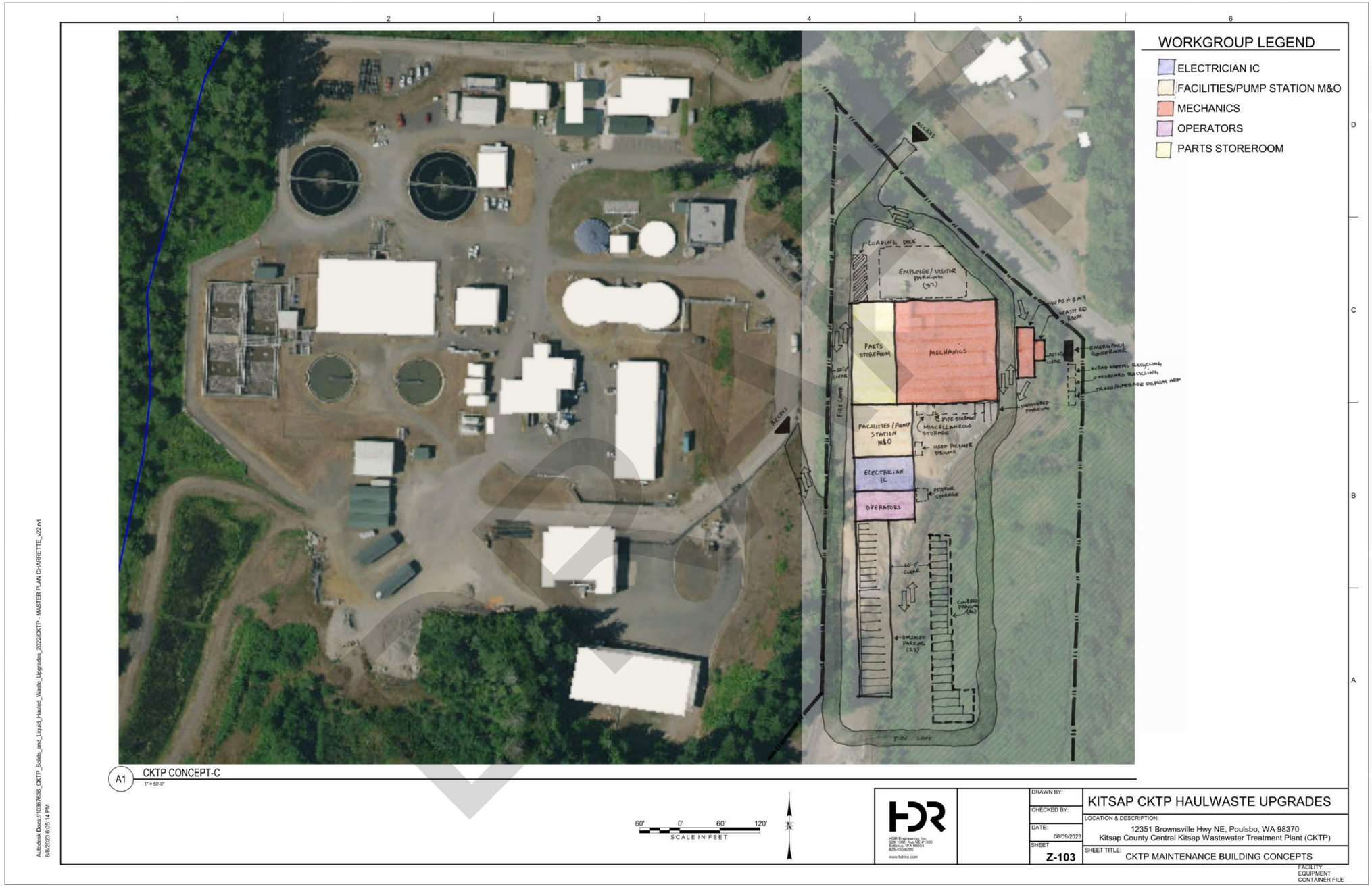

Concept D (See Figure 4-4)

- Mechanics Workgroup
  - Located on the north section of the site and east of the Parts Storeroom
  - Parallel to Fire Lane on the north of the Parcel Boundary
- Facilities/Pump Station M&O
- Located at the center of the proposed Maintenance Building and attached on the southwest side of the Mechanics Workgroup
- Electrician IC
  - Located south of the proposed Maintenance Building, attached on the northeast side of the Facilities/Pump Station M&O Workgroup and south of the Operators Workgroup
- Operators
  - Located at the center of the proposed Maintenance Building, attached to the south side of the Mechanics Workgroup and northeast of the Facilities/Pump Station M&O Workgroup
- Parts Storeroom
  - Located north of the Parcel Boundary and attached to the Mechanics Workgroup on the east
  - Parts Storeroom has direct access to the fire lane on the northeast and northwest sides
  - Loading dock is attached to the exterior southwest side of the Parts Storeroom
- Fleet Parking
  - Enclosed parking located South of the project boundary
  - Covered parking area located in the wetlands Southeast of project boundary
- Employee/Visitor Parking
  - Employee/Visitor Parking is southeast of the parcel boundary parallel on the southwest side of the fire lane
  - through the primary accessed entry located north of the project boundary.

DRAFT

Figure 4-4. Concept D

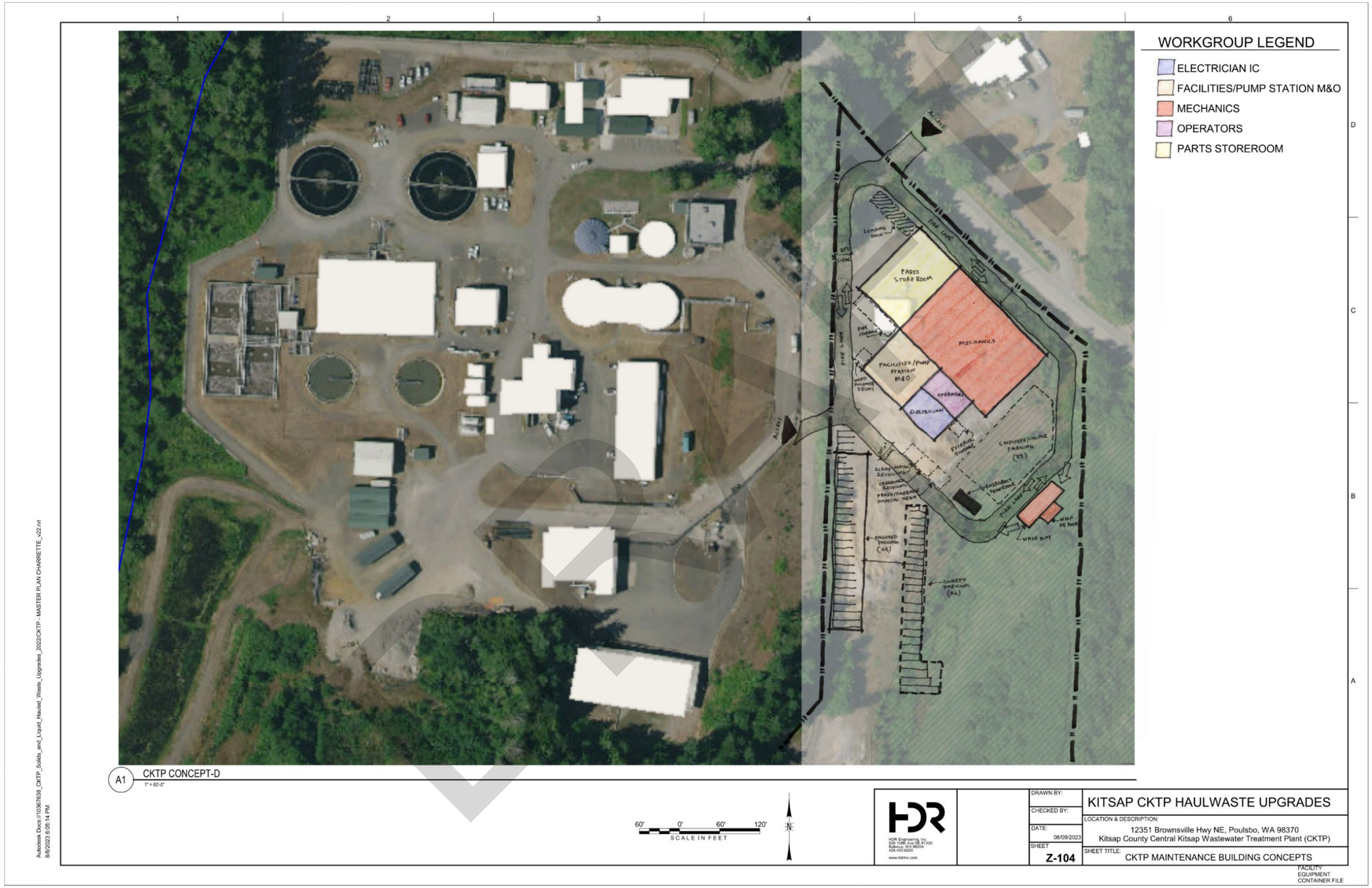

Concept E (See Figure 4-5)

- Mechanics
  - Located on the north and East sides of the maintenance building and parallel to the fire lane on the north and east sides
- Facilities/Pump Station M&O
  - Located southwest of the proposed maintenance building attached to the Operators Workgroup on the east side
- Electrician IC
  - Located at the southeast corner of the proposed Maintenance Building attached to the west of the Operators Workgroup
- Operators
  - Located south of the proposed Maintenance Building and centered between the Facilities/Pump Station Workgroup on the west with the Electrician IC Workgroup on the east
- Parts Storeroom
  - Located at the center of the proposed Maintenance Building and parallel to the fire lane on the west
  - Loading dock is attached on the west side exterior of the Parts Storeroom
- Fleet Parking
  - Enclosed parking located south of the project boundary
  - Covered parking area located in the wetlands southeast of project boundary
- Employee/Visitor Parking
  - Employee/Visitor Parking is located north of the project boundary and directly off the primary access entry to the south of Brownsville Highway

DRAFT

Figure 4-5. Concept E

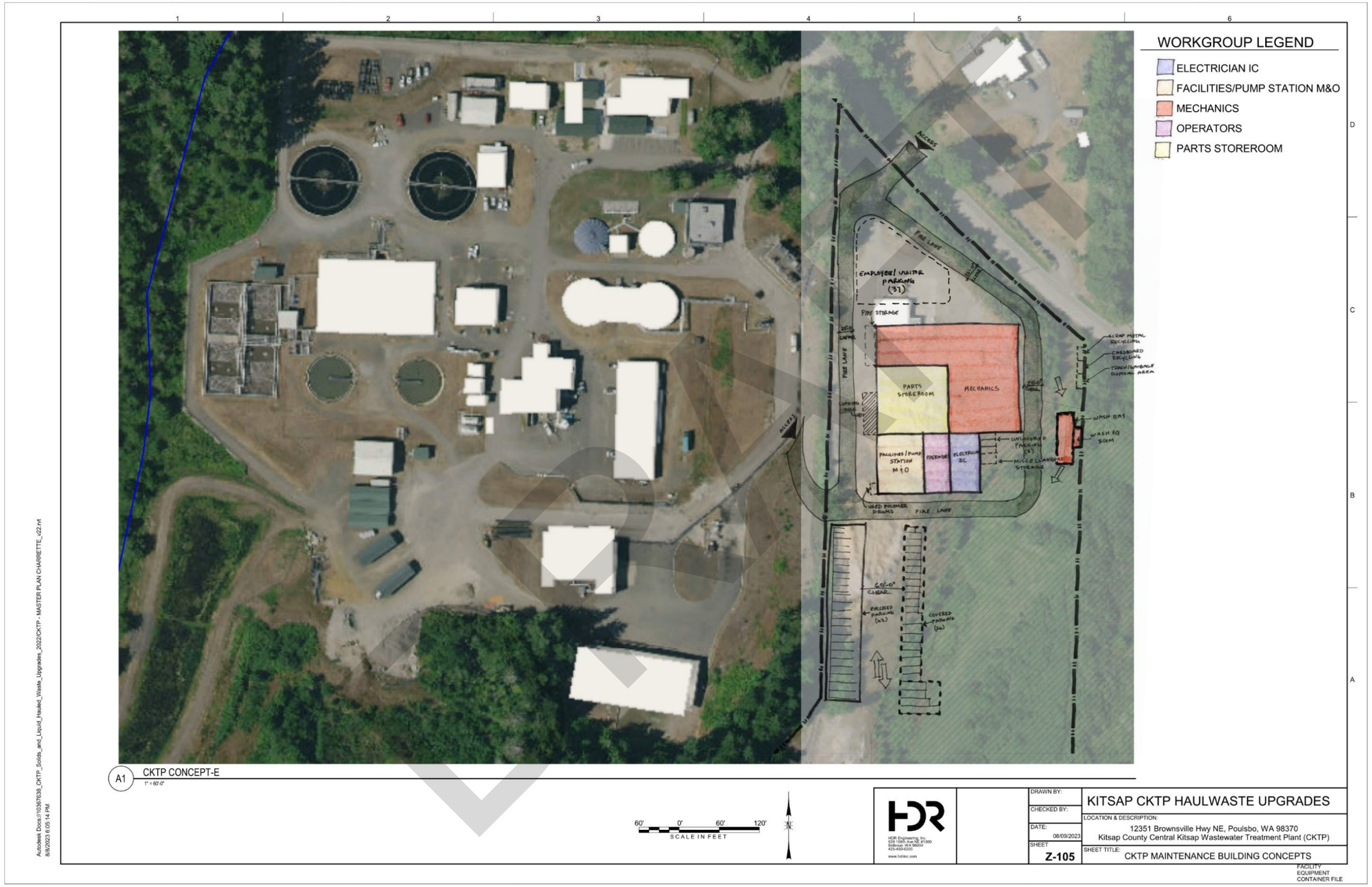

4.3.2 Stakeholders Comments

General Stakeholder comment applicable to all Hot Start Concepts are concerns about proposed building, parking, and roads encroaching on the wetland area.

Concept A

- Can parking be moved around to avoid the wetland area?
- Need to pave the fire-lane and access to trash/materials bins
- Staff and office spaces can be accommodated on level two to reduce ground-level building size
- Does covered parking need to have a back wall?
- Can the building be moved 25 feet to the East?
- Prefer more privacy from the road.

Concept B

- Remove the Wash building, cardboard recycling, trash/garbage disposal area, and scrap metal recycling from this concept to be placed on site outside of project boundary
- Proposed entry point is well received and suggested a secondary entry connected to the current narrowed site entry
- Location of the Operators Workgroup is liked due to visibility of site
- Location of the enclosed parking built next to the maintenance building for easy access between parking and building interior is desired

Concept C

- Remove the Wash building, cardboard recycling, trash/garbage disposal area, and scrap metal recycling from this concept and place on site outside of project boundary
- More privacy for Mechanics Workgroup
- Want a better connection between the parts room Facilities, Electrician, and Operators Workgroups.
- Relocate some of the parking across the project boundary line on the southwest of the site

DRAFT

Concept D

- Preferred layout
- Remove the Wash building, cardboard recycling, trash/garbage disposal area, and scrap metal recycling from this concept and place on site, outside of project boundary
- Orientation and flow around the building is desired
- Separation of public access areas of the building and staff-only access of the building is preferred
- Relocate some of the parking across the project boundary line on the southwest side of the site
- Look into a two-story option to reduce the ground floor and keep distance from wetlands

Concept E

- Preferred layout
- Concerns about building on the wetland area

4.3.3 Stakeholder Direction

- Rearrange proposed maintenance building and parking to avoid the wetland area.
- Consider relocating any covered or enclosed parking across the southwest property boundary
- Consider two-story option to minimize the ground floor of the proposed Maintenance building
- Keep tree buffer between Brownsville and the proposed buildable area
- Orient the Maintenance building in the same alignment as the highway
- Place fire lane in between tree buffer and proposed Maintenance building
- Remove Wash Bay and Wash Equipment Room from Maintenance Building Parcel. It will be located somewhere in the existing plant site.

4.3.4 August 09, 2023 – Presentation Two

To address stakeholder feedback, two design concepts were further developed. Similar to the initial five concepts presented, concept F and G (See Figure 4-6 and Figure 4-7) also show a primary entry to the Maintenance Building parcel at the existing locked entrance southeast of the main plant entrance. This entry also serves as the exit point for all vehicles accessing the site. Option G has a secondary access point that connects to the primary plant entry northwest of the site.

DRAFT

Concept F (See Figure 4-6)

- Mechanics Workgroup
  - Located at the center of the proposed Maintenance Building adjacent to all workgroups
  - Mechanics Workgroup attached to the enclosed fleet parking on the north and east sides
- Facilities/Pump Station M&O
  - Located southwest of the proposed maintenance building attached to the Electrician IC Workgroup and Operators Workgroups on the east side
- Electrician IC
  - Located south of the proposed Maintenance Building attached to Operators Workgroup and attached to the Mechanics Workgroup on the north side, Facilities/Pump Station Workgroup on the west Side and the Operator's Workgroup on the south side
- Operators
  - Located South of the proposed Maintenance Building and south of the Electrician IC Workgroup on the north of the Facilities/Pump Station Workgroup on the northwest side
- Parts Storeroom
  - Located south of the proposed Maintenance Building
- Fleet Parking
  - Enclosed parking located on the north and east sides of the Mechanics Workgroup
  - Covered parking area located south of the Project Boundary
  - Uncovered parking located on the east side of the Electrician IC Workgroup
- Employee/Visitor Parking
  - Employee/Visitor Parking is located north of the project boundary and directly off the primary access entry to the south of Brownsville Highway

DRAFT

Figure 4-6. Concept F

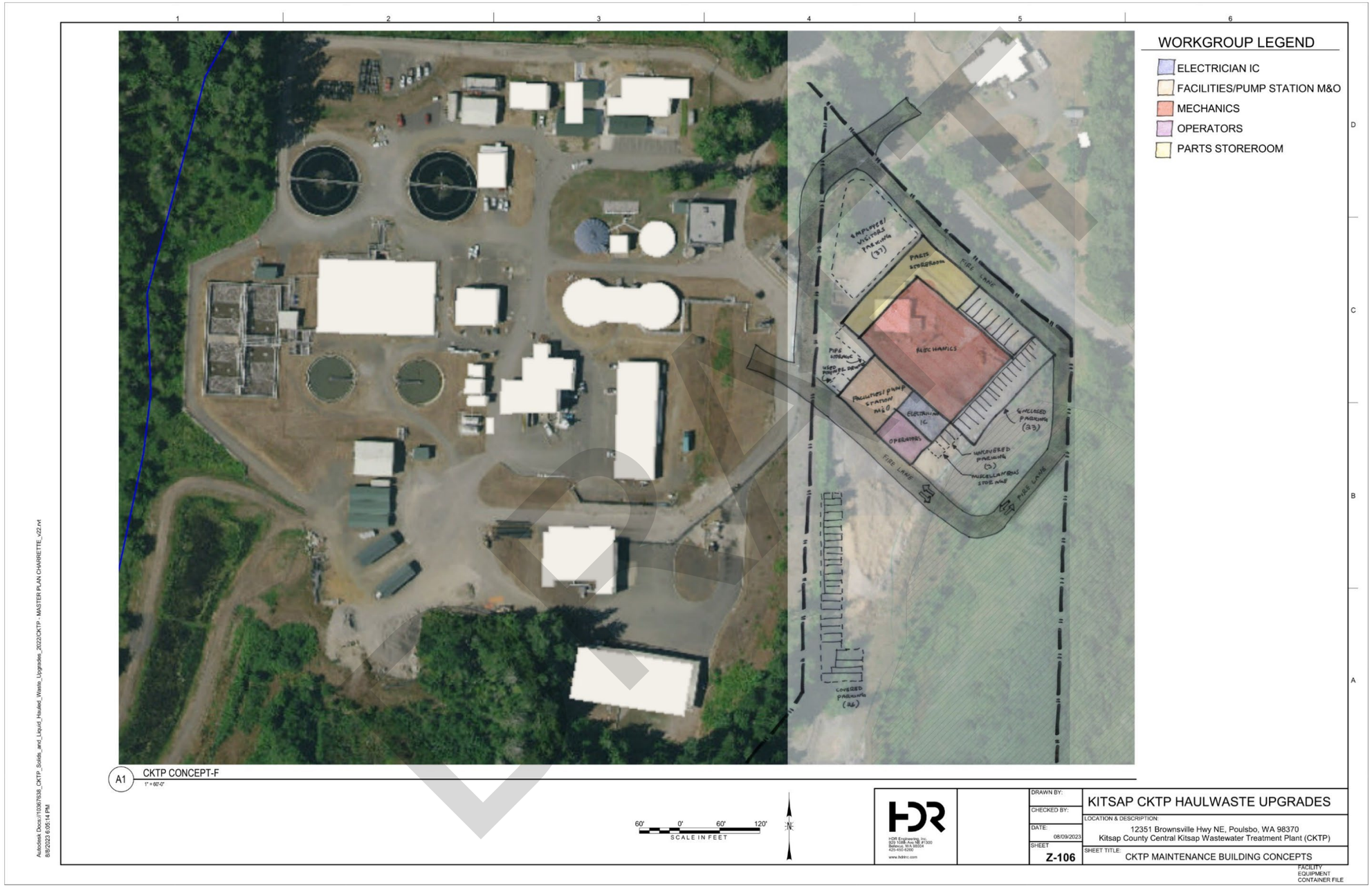

Concept G (See Figure 4-7)

- Mechanics Workgroup
  - Located on the north and east sides of the proposed Maintenance Building and parallel to the fire lane on the north and east sides
- Facilities/Pump Station M&O
  - Located southwest of the proposed maintenance building attached to the Electrician IC Workgroup on the East side and the Parts Storeroom on the north side
- Parts Storeroom
  - Located at the center of the proposed Maintenance Building
  - Loading dock is attached on the exterior of the Parts Storeroom on the northwest side
- Electrician IC
  - Located at the southwest corner of the proposed Maintenance Building attached on the east of the Operators Workgroup
- Operators
  - Located south of the proposed Maintenance Building and centered between the Electrician IC Workgroup on the west with the covered fleet parking on the east
- Fleet Parking
  - Enclosed parking located on the east side of the Mechanics and Operators Workgroups
  - Covered parking area located south of the boundary
- Employee/Visitor Parking
  - Employee/Visitor Parking is located north of the project boundary and directly off the primary access entry to the south of Brownsville Highway

DRAFT

Figure 4-7. Concept G

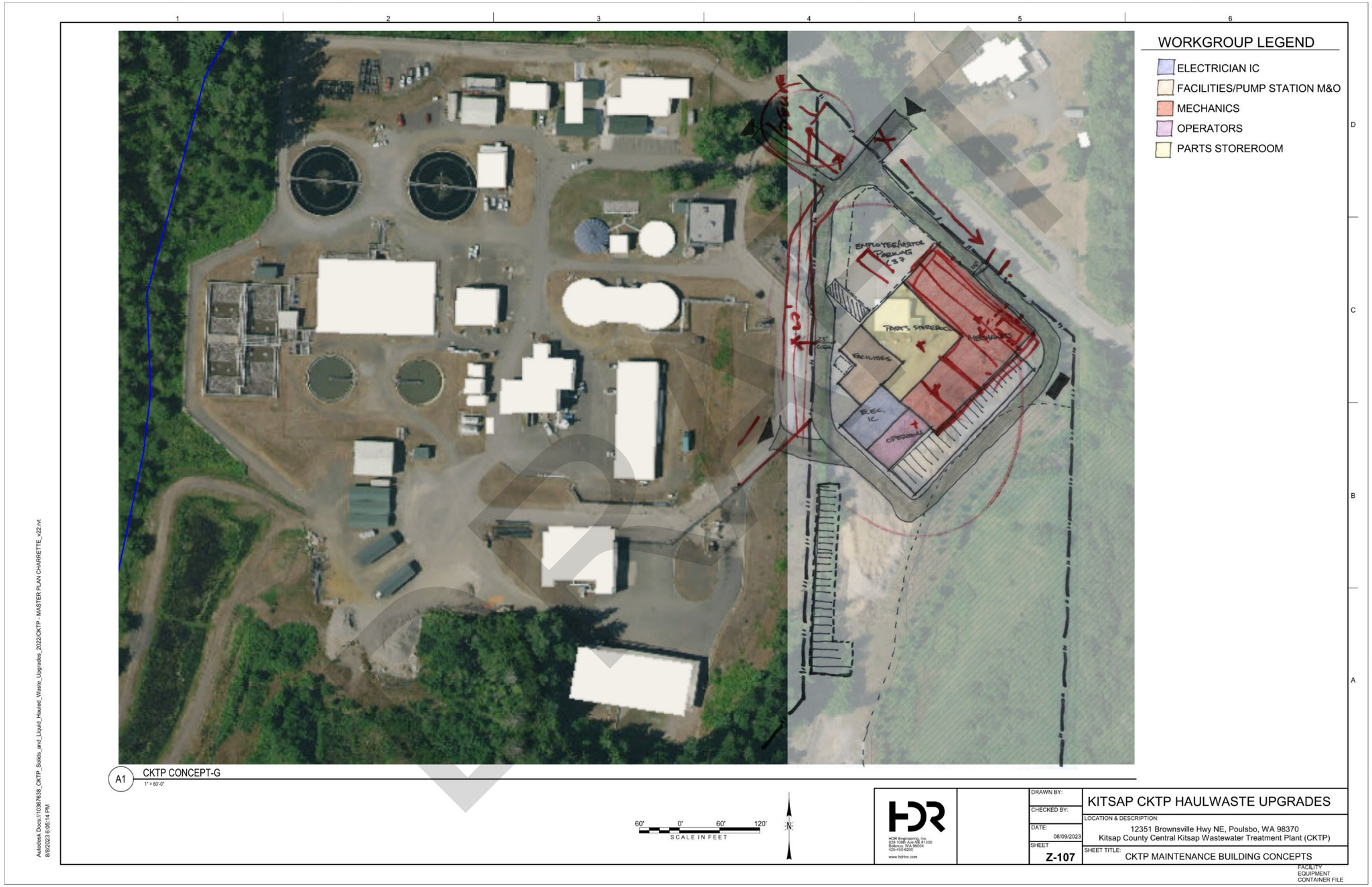

Final Stakeholder Comments General Statements

- Remove Operators Workgroup from Maintenance Building Concepts. One of the vacated existing buildings on site will be renovated and house the Operators Workgroup.
- Move forward with the idea of locating a portion of the enclosed parking attached to the Maintenance Building.
- Maintain 50 feet setback from front parcel boundary.
- To reduce sound pollution to adjacent neighboring properties, relocate proposed main access to the Maintenance Building parcel to southeast.

4.4 Post Charrette Activities

At the conclusion of the Design Charrette, the Planning Team was tasked with modifying Concept F to address and incorporate the final stakeholder directions. The final Master Plan Concept F.2 (See Figure 4-8), and one additional concept H (See Figure 4-9 and 4-10) was developed to satisfy stakeholder request of a two-story concept for reference. The primary entry to the Maintenance Building parcel for concepts F.2 and H is at the existing locked entrance southeast of the main plant entrance which also serves as the exit point for all vehicles accessing the site. A secondary access point that connects to the primary plant entry northwest of the site was also provided for these two concepts.

The Draft Master Plan Concept was submitted to Kitsap CKTP for review.

Concept F.2 (See Figure 4-8)

- Mechanics Workgroup
  - Located at the center of the proposed Maintenance Building and attached to all workgroups
  - Mechanics Workgroup has direct access to the fire lane on the east and west sides
- Facilities/Pump Station M&O
  - Located Southwest of the proposed maintenance building attached to the Electrician IC Workgroup on the east side and south of the Mechanics Workgroup
- Parts Storeroom
  - Located North of the proposed Maintenance Building
  - Loading dock is attached on the exterior of the Parts Storeroom on the northeast corner

DRAFT

- Electrician IC
  - Located at the southeast corner of the proposed Maintenance Building attached to the Facilities/Pump Station Workgroup on the west Side, the Mechanics Workgroup on the north, and the enclosed parking on the south
  - Electrician IC Workgroup has direct access to the fire lane on the southeast
- Fleet Parking
  - Enclosed parking split into two areas; One area attached to the south side of the Facilities/Pump Station and Electrician IC Workgroups and the other south of the proposed Maintenance Building
  - Covered parking area located south of the Project Boundary
  - Uncovered parking located on the east side of the Electrician IC Workgroup
- Employee/Visitor Parking
  - Employee/Visitor Parking is located on north, south and east sides of the Project Boundary

DRAFT

Figure 4-8. Concept F2

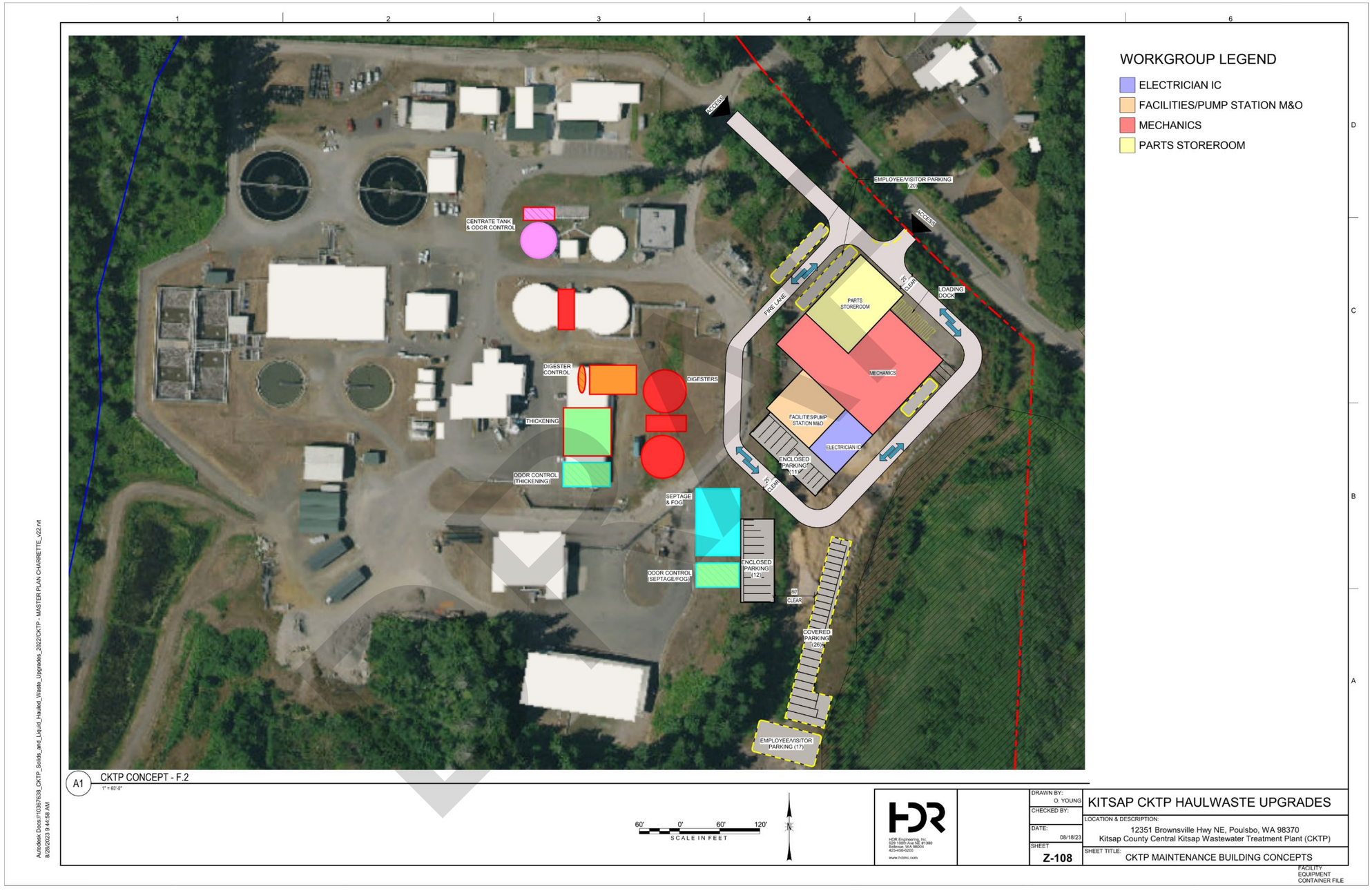

Concept H (See Figure 4-9 and Figure 4-10)

- Mechanics Workgroup
  - Located at the center of the proposed Maintenance Building and attached to all workgroups
  - Mechanics Workgroup has direct access to the fire lane on the east and west sides
- Facilities/Pump Station M&O
  - Located southwest of the proposed maintenance building attached to the Electrician IC Workgroup on the east side and south of the Mechanics Workgroup
- Parts Storeroom
  - Located north of the proposed Maintenance Building
  - Loading dock is attached to the exterior of the Parts Storeroom on the northwest corner
- Electrician IC
  - Located Southeast corner of the proposed Maintenance Building attached to the Facilities/Pump Station Workgroup on the west Side, the Mechanics Workgroup on the north, and the enclosed parking on the south
  - Electrician IC Workgroup has direct access to the fire lane on the southeast
- Fleet Parking
  - Enclosed parking split into two areas; One area attached to the south side of the Facilities/Pump Station and Electrician IC Workgroups and the other south of the proposed Maintenance Building
  - Covered parking area located south of the Project Boundary
  - Uncovered parking located on the west side of the Electrician IC Workgroup
- Employee/Visitor Parking
  - Employee/Visitor Parking is located north of the project boundary and directly off the primary access entry to the south of Brownsville Highway

DRAFT

Figure 4-9. Concept H

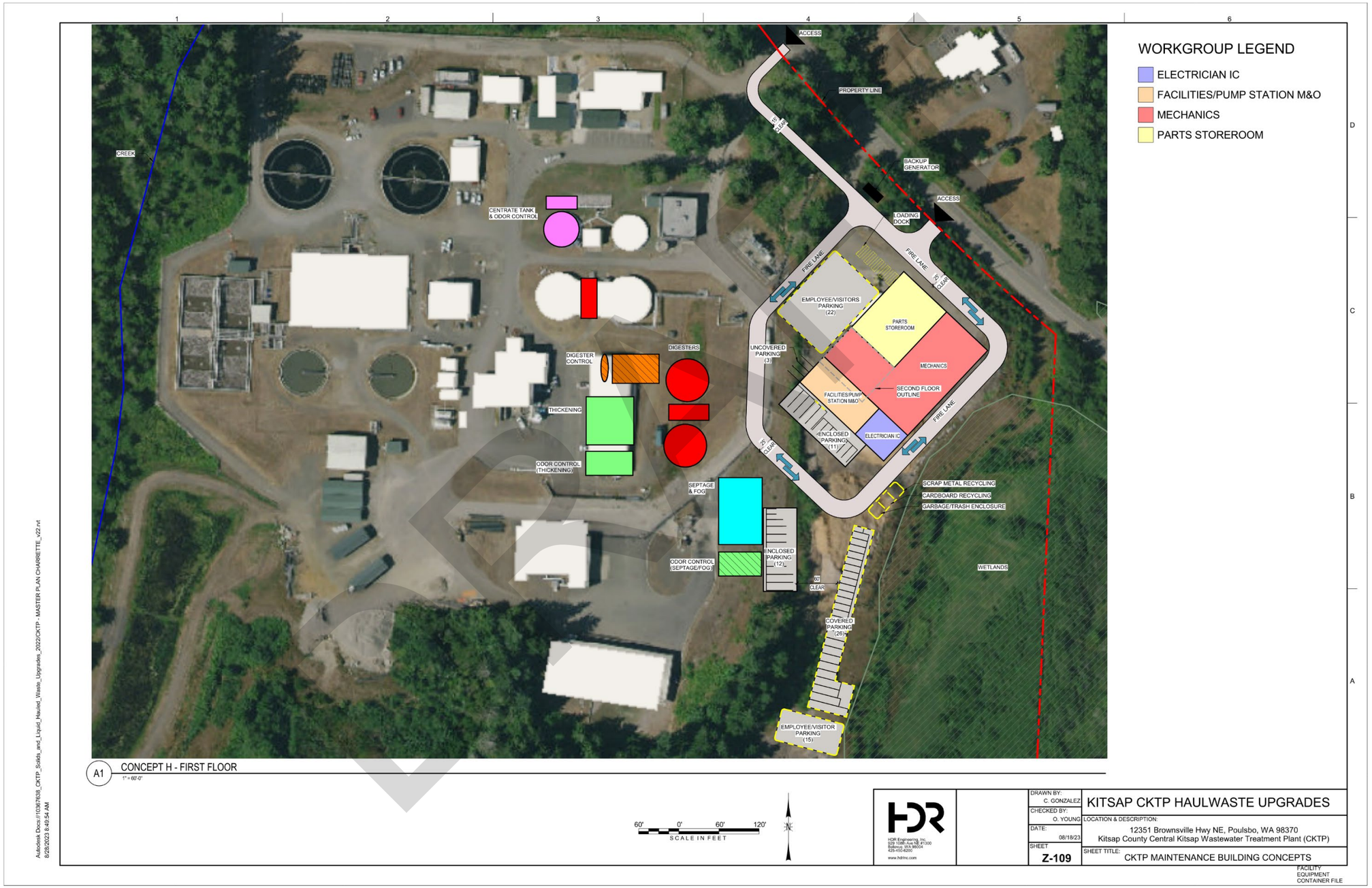

Figure 4-10. Concept H

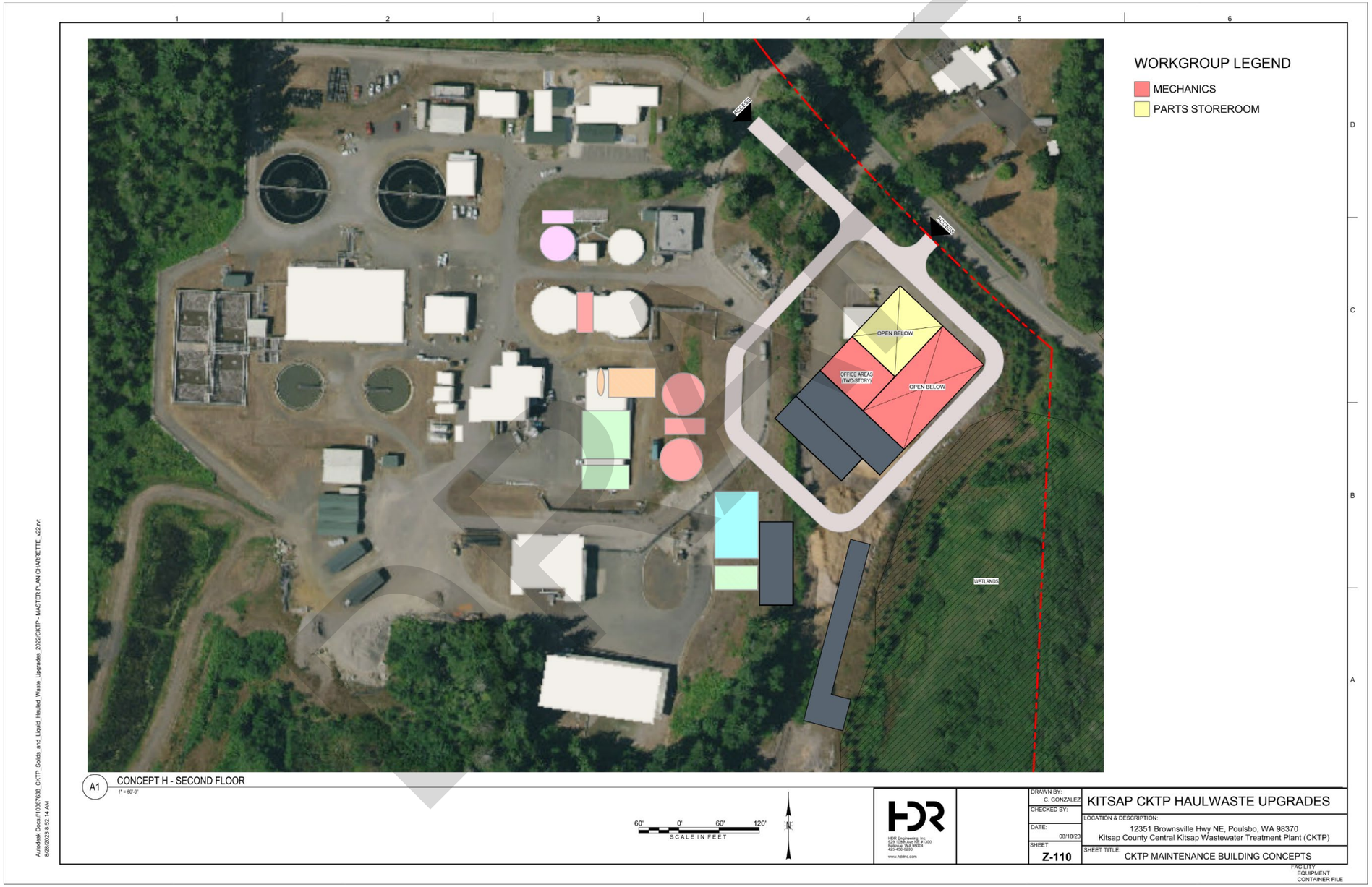

A

Appendix A. Space Needs Program

DRAFT

DRAFT

September 7, 2023

Mechanics

Area Description	EXISTING 2023 Quantity Staff	EXISTING 2023 Quantity Space	EXISTING 2023 Area (SF)	Space Standards	Min. Size (SF)	PROJECTED 2028 Quantity Staff	2028 Quantity Space	2028 Area (SF)	PROJECTED 2033 Quantity Staff	2033 Quantity Space	2033 Area (SF)	PROJECTED 2043 Quantity Staff	2043 Quantity Space	2043 Area (SF)	Remarks
Office and Office Support															
Office Area															
O&M Supervisor	1		100	120		1		120	1		120	1		120	Private Office
O&M Specialist	5		192	64	64	6	6	384	7	7	448	7	7	448	Shared Office
Spare Workstations	5		192	64	64	0	2	128	0	2	128	0	2	128	Shared Office
Shared Areas															
Break Room w/ Kitchenette			Incl.	15 sf/ Person	100		21	380		24	380		25	380	Shared with other Work Groups. Adjacent to Training Room
Refrigerator			*Incl.*	*10*			*3*	*30*		*3*	*30*		*3*	*30*	
Stove/Oven			*Incl.*	*10*			*0*	*0*		*0*	*0*		*0*	*0*	
Microwave			*Incl.*	*5*			*2*	*10*		*2*	*10*		*2*	*10*	
Water Cooler			*Incl.*	*5*			*1*	*5*		*1*	*5*		*1*	*5*	
Ice Machine			*Incl.*	*10*			*1*	*10*		*1*	*10*		*1*	*10*	
Coffee Bar			*Incl.*	*10*			*1*	*10*		*1*	*10*		*1*	*10*	
Copy/Workroom/Supplies			Incl.	80				80			80			80	Locate near Office Area
Small Conference Room				20 sf/ Person			10	200		10	200		10	200	Equip with a large wall mounted monitor, webcam, standard conference table and chairs
Training Room				40 sf/ Person			25	1000		25	1000		25	1000	Equip with standard tables and chairs, large wall-mounted monitor
Instructor Workstation			*Incl.*	*64*			*0*	*0*		*0*	*0*		*0*	*0*	*Locate near primary monitor*
Support Areas															
Men's Lockers			Incl.	13.50 sf/ Tech.	*100% Staff*		21	300		24	340		25	360	Assigned lockers; Combined with other workgroups
Men's Restroom/Shower			Incl.					400			400			400	
Toilet(s) / Urinal(s)			*Incl.*	*50*			*2*	*100*		*2*	*100*		*2*	*100*	*Verify quantity per Code*
Sink(s)			*Incl.*	*50*			*2*	*100*		*2*	*100*		*2*	*100*	*Verify quantity per Code*
Round Sink			*Incl.*	*50*			*1*	*50*		*1*	*50*		*1*	*50*	
Shower(s)			*Incl.*	*50*			*3*	*150*		*3*	*150*		*3*	*150*	*Verify quantity per Code*
Women's Lockers			Incl.	13.50 sf/ Tech.	*20% Staff*		4	100		5	100		5	100	Assigned lockers; Combined with other workgroups
Women's Restroom/Shower			Incl.					200			200			200	
Toilet(s)			*Incl.*	*50*			*1*	*50*		*1*	*50*		*1*	*50*	*Verify quantity per Code*
Sink(s)			*Incl.*	*50*			*1*	*50*		*1*	*50*		*1*	*50*	*Verify quantity per Code*
Round Sink			*Incl.*	*50*			*1*	*50*		*1*	*50*		*1*	*50*	
Shower(s)			*Incl.*	*50*			*1*	*50*		*1*	*50*		*1*	*50*	
Mud Room				300			1	300		1	300		1	300	Space for washing down and drying foul weather gear. Adjacent to Lockers
Laundry Room				120			1	120		1	120		1	120	space for one Washer, and one Dryer
Storage Areas															
Custodial Room			Incl.	100				100			100			100	
Subtotal			484					3,812			3,916			3,936	
Circ/Mech/Elec/Struct (Net: Gross)			Incl.	40%				1,525			1,566			1,574	
Electrical Room			Incl.	2.0% bldg sf	100			100			100			100	
Data/Comm. Room			Incl.	0.5% bldg sf	100			100			100			100	
Mechanical Room			Incl.	5.0% bldg sf	100			191			196			197	
Fire/Sprinkler Room			Incl.	0.5% bldg sf	80			80			80			80	
Total: Office and Office Support	**11**		**484**			**7**		**5,807**	**8**		**5,958**	**8**		**5,987**	

DRAFT

September 7, 2023

Mechanics

Area Description	EXISTING 2023 Quantity Staff	EXISTING 2023 Quantity Space	EXISTING 2023 Area (SF)	Space Standards	Min. Size (SF)	PROJECTED 2028 Quantity Staff	PROJECTED 2028 Quantity Space	PROJECTED 2028 Area (SF)	PROJECTED 2033 Quantity Staff	PROJECTED 2033 Quantity Space	PROJECTED 2033 Area (SF)	PROJECTED 2043 Quantity Staff	PROJECTED 2043 Quantity Space	PROJECTED 2043 Area (SF)	Remarks
Mechanics Shop															
Shop Area															
Mechanics Shop			1600	40 x 75			1	3000		1	3000		1	3000	Configured to provide vehicular access; Equip with 5T bridge crane,prep/cleaning area, and other fixed equipment
Welding / Fabrication Shop			256	40 x 55			1	2200		1	2200		1	2200	Fabrication and Welding space for Stainless Steel and Aluminum with welders,plasma cutter, CNC plasma table, 10x10' welding
Computer Room			0	10 x 10			0	0		0	0		0	0	Inside Fabrication and Welding shop to support operation of CNC plasma table
Storage Areas															
Lube / Compressor Room			220	5 sf/ fl. Veh.				985			985			985	Compressor, dryer, UO tank
55 gallon drums				*25*			*20*	*500*		*20*	*500*		*20*	*500*	
Compressor				*280*			*1*	*280*		*1*	*280*		*1*	*280*	
Dryer				*50*			*1*	*50*		*1*	*50*		*1*	*50*	
Receiver				*50*			*1*	*50*		*1*	*50*		*1*	*50*	
Temporary Equipment Storage							1	750		1	750		1	750	Storage for parts awaiting replacement
Mezzanine Storage			512	500			0	0		0	0		0	0	(E) Mezzanine above shop area
Miscellaneous Shop Storage			Incl.	500			1	500		1	500		1	500	Storage for pipes, small parts, and miscellaneous items received from Parts Storeroom; Provide racks and shelving units. Locate inside Mechanics Shop
Steel Storage			Incl.	100			0	0		0	0		0	0	Storage of 10' length steel and 20' heavy beams. Vertical storage preferred and would reduce footprint. A dedicated enclosed area for bulk steel storage is needed.. vertical uprights, flat sheet goods able to accommodate 4'x10' sheets Smaller rack for remanants.
Equipment Loading Bay		3	3750	25 x 50			3	3750		3	3750		3	3750	Locate adjacent shop
Manuals Library			Incl.	100			1	100		1	100		1	100	Include computer workstation and storage for manuals
Portable Equipment Storage			Incl.	100			0	0		0	0		0	0	Locate inside shop
Secured Tool Storage			Incl.	300			1	300		1	300		1	300	Provide racks and lockable shelving units to store high valued tools; Secured area
Handwash Sink / Em. Eye Wash			Incl.	80			2	160		2	160		2	160	Locate inside shop
Subtotal			6,338					11,745			11,745			11,745	
Circulation/Structural (Net: Gross)			0	20%				2,349			2,349			2,349	
Electrical Room			Incl.	2.0% bldg sf	100			235			235			235	
Data/Comm. Room			Incl.	0.5% bldg sf	100			100			100			100	
Mechanical Room			Incl.	5.0% bldg sf	100			587			587			587	
Fire/Sprinkler Room			Incl.	0.5% bldg sf	80			80			80			80	
Total: Mechanics Shop			**6,338**					**15,096**			**15,096**			**15,096**	
Total: Shop and Shop Storage			**6,338**					**15,096**			**15,096**			**15,096**	

DRAFT

September 7, 2023

Mechanics

Area Description	EXISTING 2023 Quantity Staff	EXISTING 2023 Quantity Space	EXISTING 2023 Area (SF)	Space Standards	Min. Size (SF)	PROJECTED 2028 Quantity Staff	2028 Quantity Space	2028 Area (SF)	PROJECTED 2033 Quantity Staff	2033 Quantity Space	2033 Area (SF)	PROJECTED 2043 Quantity Staff	2043 Quantity Space	2043 Area (SF)	Remarks
Wash Facility															
Truck/Equipment Wash Area															
Wash Bay				25 x 75			1	1875		1	1875		1	1875	Manual hot water high pressure Vehicle/Equipment wash. Covered
Wash Equipment Room				15 x 30			1	450		1	450		1	450	Water Reclamation
Subtotal			0					2,325			2,325			2,325	
Circulation/Structural (Net: Gross)			0	10%				233			233			233	
Electrical Room			Incl.	2.0% bldg sf	0			47			47			47	
Data/Comm. Room			Incl.	0.5% bldg sf	0			12			12			12	
Mechanical Room			Incl.	5.0% bldg sf	0			116			116			116	
Fire/Sprinkler Room			Incl.	0.5% bldg sf	0			12			12			12	
Total: Wash Facility			**0**					**2,744**			**2,744**			**2,744**	
Covered Material Storage															
Covered Area															
Miscellaneous Storage				15 x 25			1	375		1	375		1	375	Spare piping, Pallet racking including spare parts. Locate adjacent to Parts Storeroom.
Pipe Storage			900	15 x 60			1	900		1	900		1	900	Pipe storage in enclosed space.
Subtotal			900					1,275			1,275			1,275	
Circulation/Structural (Net: Gross)			90	10%				128			128			128	
Total: Covered Material Storage			**990**					**1,403**			**1,403**			**1,403**	
Exterior Storage															
Storage															
Pipe Storage		1	3900	15 x 60			0	0		0	0		0	0	(E) Exterior uncovered pipe storage to be relocated to enclosed space.
Miscellaneous Storage		1	5500	30 x 125			1	3750		1	3750		1	3750	(E) Exterior uncovered miscellaneous storage to be relocated to new site.
Subtotal			9,400					3,750			3,750			3,750	
Circulation (Net: Gross)			9,400	100%				3,750			3,750			3,750	
Total: Exterior Storage			**18,800**					**7,500**			**7,500**			**7,500**	
Total: Mechanics	**11**		**26,612**			**7**		**32,550**	**8**		**32,700**	**8**		**32,729**	

DRAFT

September 7, 2023

Electrician IC

Area Description	EXISTING 2023 Quantity Staff	EXISTING 2023 Quantity Space	EXISTING 2023 Area (SF)	Space Standards	Min. Size (SF)	PROJECTED 2028 Quantity Staff	2028 Quantity Space	2028 Area (SF)	PROJECTED 2033 Quantity Staff	2033 Quantity Space	2033 Area (SF)	PROJECTED 2043 Quantity Staff	2043 Quantity Space	2043 Area (SF)	Remarks
Office and Office Support															
Office Area															
Building 103	0	1	864	120		0		0	0		0	0		0	(E) Office Space – individual office workstations are at capacity. Very small workbench to test run PLC's, HMI's and PC's
Electrician IC Supervisor	1		Incl.	120		1		120	1		120	1		120	Private Office
Electrician	2		Incl.	64	64	3	3	192	4	4	256	4	4	256	Open office configuration; Locate near Shop
Instrument & Control Technician	3		Incl.	64	64	4	4	256	4	4	256	4	4	256	Open office configuration; Locate near Shop
Shared Areas															
Break Room w/ Kitchenette			Incl.	15 sf/ Person	100			0			0			0	Shared with other workgroups
Copy/Workroom/Supplies			Incl.	80	80		1	80		1	80		1	80	Locate near Office Area
Small Conference Room				20 sf/ Person			8	160		9	180		9	180	Equip with standard conference table and chairs
Support Areas															
Men's Lockers			Incl.	13.50 sf/ Tech.	*100% Staff*		0	0		0	0		0	0	Combined with other workgroups
Men's Restroom/Shower			Incl.					0			0			0	Combined with other workgroups
Toilet(s) / Urinal(s)			*Incl.*	*50*			*0*	*0*		*0*	*0*		*0*	*0*	*Verify quantity per Code*
Sink(s)			*Incl.*	*50*			*0*	*0*		*0*	*0*		*0*	*0*	*Verify quantity per Code*
Round Sink			*Incl.*	*50*			*0*	*0*		*0*	*0*		*0*	*0*	
Shower(s)			*Incl.*	*50*			*0*	*0*		*0*	*0*		*0*	*0*	
Women's Lockers			Incl.	13.50 sf/ Tech.	*20% Staff*		0	0		0	0		0	0	Combined with other workgroups
Women's Restroom/Shower			Incl.					0			0			0	Combined with other workgroups
Toilet(s)			*Incl.*	*50*			*0*	*0*		*0*	*0*		*0*	*0*	*Verify quantity per Code*
Sink(s)			*Incl.*	*50*			*0*	*0*		*0*	*0*		*0*	*0*	*Verify quantity per Code*
Round Sink			*Incl.*	*50*			*0*	*0*		*0*	*0*		*0*	*0*	
Shower(s)			*Incl.*	*50*			*0*	*0*		*0*	*0*		*0*	*0*	
Storage Areas															
Custodial Room			Incl.	100				100			100			100	
Subtotal			864					908			992			992	
Circ/Mech/Elec/Struct (Net: Gross)			Incl.	40%				363			397			397	
Electrical Room			Incl.	2.0% bldg sf	100			100			100			100	
Data/Comm. Room			Incl.	0.5% bldg sf	100			100			100			100	
Mechanical Room			Incl.	5.0% bldg sf	100			100			100			100	
Fire/Sprinkler Room			Incl.	0.5% bldg sf	80			80			80			80	
Total: Office and Office Support	**6**		**864**			**8**		**1,651**	**9**		**1,769**	**9**		**1,769**	

DRAFT

September 7, 2023

Electrician IC

Area Description	EXISTING 2023 Quantity Staff	EXISTING 2023 Quantity Space	EXISTING 2023 Area (SF)	Space Standards	Min. Size (SF)	PROJECTED 2028 Quantity Staff	2028 Quantity Space	2028 Area (SF)	PROJECTED 2033 Quantity Staff	2033 Quantity Space	2033 Area (SF)	PROJECTED 2043 Quantity Staff	2043 Quantity Space	2043 Area (SF)	Remarks
Electric Shop															
Shop Area															
Electric Shop			Incl.	25 x 30			1	750		1	750		1	750	Climate assisted space. Locate adjacent to Data/Comm. Room (Server Room). Provide staticproof table with shelf, and 120v, 480v, 24v outlers. Satering/engraving station, scada connection.
Instrument Calibration Shop				25 x 30			1	750		1	750		1	750	Required by SCADA Master Plan. Climate assisted space. Locate adjacent to Mechanics Shop.
Storage Areas															
Parts Storage			810	25 x 40			0	0		0	0		0	0	Storage for small, miscellaneous items received from Parts Storeroom; Provide racks and shelving units
Secured Tool Storage			Incl.	300			1	300		1	300		1	300	Provide racks and lockable shelving units to store high valued tools
Handwash Sink / Em. Eye Wash			0	80			1	80		1	80		1	80	Locate in shop
Subtotal			810					1,880			1,880			1,880	
Circulation/Structural (Net: Gross)			0	20%				376			376			376	
Electrical Room			Incl.	2.0% bldg sf	100			100			100			100	
Data/Comm. Room			Incl.	0.5% bldg sf	100			100			100			100	
Mechanical Room			Incl.	5.0% bldg sf	100			100			100			100	
Fire/Sprinkler Room			Incl.	0.5% bldg sf	80			80			80			80	
Total: Electric Shop			**810**					**2,636**			**2,636**			**2,636**	
Total: Electrician IC	**6**		**1,674**			**8**		**4,287**	**9**		**4,405**	**9**		**4,405**	

DRAFT

September 7, 2023

Facilities/Pump Station M&O

Area Description	EXISTING 2023 Quantity Staff	EXISTING 2023 Quantity Space	EXISTING 2023 Area (SF)	Space Standards	Min. Size (SF)	PROJECTED 2028 Quantity Staff	2028 Quantity Space	2028 Area (SF)	PROJECTED 2033 Quantity Staff	2033 Quantity Space	2033 Area (SF)	PROJECTED 2043 Quantity Staff	2043 Quantity Space	2043 Area (SF)	Remarks
Office and Office Support															
Office Area															
Facility / Pump Station M&O Crew Supervisor	1		120	120		1	1	120	1	1	120	1	1	120	Private Office
Facility M&O Specialists	5		120	64	64	5	1	320	6	1	384	7	1	448	Shared Office; Locate near Shop
Shared Areas															
Break Room w/ Kitchenette			Incl.	15 sf/ Person	100			0			0			0	Shared with other workgroups
Copy/Workroom/Supplies				80			1	80		1	80		1	80	Locate near Office Area
Small Conference Room				20 sf/ Person			5	100		5	100		5	100	Equip with standard conference table and chairs
Training Room				40 sf/ Person				0			0			0	Shared with other workgroups
Support Areas															
Men's Lockers				13.50 sf/ Tech.	*100% Staff*		0	0		0	0		0	0	Combined with other workgroups
Men's Restroom/Shower			0					0			0			0	Combined with other workgroups
Toilet(s) / Urinal(s)				*50*			*0*	*0*		*0*	*0*		*0*	*0*	*Verify quantity per Code*
Sink(s)				*50*			*0*	*0*		*0*	*0*		*0*	*0*	*Verify quantity per Code*
Round Sink				*50*			*0*	*0*		*0*	*0*		*0*	*0*	
Shower(s)				*50*			*0*	*0*		*0*	*0*		*0*	*0*	
Women's Lockers				13.50 sf/ Tech.	*20% Staff*		0	0		0	0		0	0	Combined with other workgroups
Women's Restroom/Shower			0					0			0			0	Combined with other workgroups
Toilet(s)				*50*			*0*	*0*		*0*	*0*		*0*	*0*	*Verify quantity per Code*
Sink(s)				*50*			*0*	*0*		*0*	*0*		*0*	*0*	*Verify quantity per Code*
Round Sink				*50*			*0*	*0*		*0*	*0*		*0*	*0*	
Shower(s)				*50*			*0*	*0*		*0*	*0*		*0*	*0*	
Storage Areas															
Secure Storage				100				100			100			100	
Custodial Room				100				100			100		1	100	
Subtotal			240					820			884			948	
Circ/Mech/Elec/Struct (Net: Gross)			Incl.	40%				328			354			379	
Electrical Room			Incl.	2.0% bldg sf	100			100			100			100	
Data/Comm. Room			Incl.	0.5% bldg sf	100			100			100			100	
Mechanical Room			Incl.	5.0% bldg sf	100			100			100			100	
Fire/Sprinkler Room			Incl.	0.5% bldg sf	80			80			80			80	
Total: Office and Office Support	**6**		**240**			**6**		**1,528**	**7**		**1,618**	**8**		**1,707**	

DRAFT

September 7, 2023

Facilities/Pump Station M&O

Area Description	EXISTING 2023 Quantity Staff	EXISTING 2023 Quantity Space	EXISTING 2023 Area (SF)	Space Standards	Min. Size (SF)	PROJECTED 2028 Quantity Staff	2028 Quantity Space	2028 Area (SF)	PROJECTED 2033 Quantity Staff	2033 Quantity Space	2033 Area (SF)	PROJECTED 2043 Quantity Staff	2043 Quantity Space	2043 Area (SF)	Remarks
Facilities Pump Station O&M Workshop															
Shop Area															
Multi-Purpose Shop			336				1	1625		1	1625		1	1625	Dedicated space for special carpentry projects
Carpentry Shop			*336*	*25 x 15*			*1*	*375*		*1*	*375*		*1*	*375*	*Dedicated space for special carpentry projects*
Equipment Repair Shop			*Incl.*	*25 x 25*			*1*	*625*		*1*	*625*		*1*	*625*	*Repair of facilities maintenance equipment*
Small Engine Repair Shop			*Incl.*	*25 x 25*			*1*	*625*		*1*	*625*		*1*	*625*	*Equipped with workbenches, vise, and other repair equipment.*
Painting Room				15 x 20			1	300		1	300		1	300	Painting and touch up of repaired equipment. Locate adjacent to Equipment/Small Engine Repair Shop
Storage Areas															
Tool Storage			0	300			0	0		0	0		0	0	Included in Parts Storeroom
Secured Tool Storage			100	300			1	300		1	300		1	300	Provide racks and lockable shelving units to store high valued tools; Secured/caged area
Handwash Sink / Em. Eye Wash				80			1	80		1	80		1	80	Locate in shop
Subtotal			436					2,305			2,305			2,305	
Circulation/Structural (Net: Gross)			0	20%				461			461			461	
Electrical Room			Incl.	2.0% bldg sf	100			100			100			100	
Data/Comm. Room			Incl.	0.5% bldg sf	100			100			100			100	
Mechanical Room			Incl.	5.0% bldg sf	100			115			115			115	
Fire/Sprinkler Room			Incl.	0.5% bldg sf	80			80			80			80	
Total: Facilities Pump Station O&M Workshop			**436**					**3,161**			**3,161**			**3,161**	
Total: Shop and Shop Storage			**436**					**3,161**			**3,161**			**3,161**	

DRAFT

September 7, 2023

Facilities/Pump Station M&O

Area Description	EXISTING 2023 Quantity Staff	EXISTING 2023 Quantity Space	EXISTING 2023 Area (SF)	Space Standards	Min. Size (SF)	PROJECTED 2028 Quantity Staff	PROJECTED 2028 Quantity Space	PROJECTED 2028 Area (SF)	PROJECTED 2033 Quantity Staff	PROJECTED 2033 Quantity Space	PROJECTED 2033 Area (SF)	PROJECTED 2043 Quantity Staff	PROJECTED 2043 Quantity Space	PROJECTED 2043 Area (SF)	Remarks
Covered Material Storage															
Covered Area															
Groundskeeping Equipment Storage			288	15 x 25			1	375		1	375		1	375	Storage for groundskeeping equipment and small area for fuel storage
Lumbar Storage				15 x 30			0	0		0	0		0	0	
Subtotal			288					375			375			375	
Circulation/Structural (Net: Gross)			43	15%				56			56			56	
Total: Covered Material Storage			**331**					**431**			**431**			**431**	
Exterior Storage															
Uncovered Area															
Emergency Generator				12 x 30			1	360		1	360		1	360	
Scrap Metal Recycling				200			1	200		1	200		1	200	
Cardboard Recycling				200			1	200		1	200		1	200	
Trash/Garbage Disposal Area				200			1	200		1	200		1	200	
Hazardous Material Storage			200	200			1	200		1	200		1	200	storage of empty bulk operations chemicals containers
Subtotal			200					1,160			1,160			1,160	
Circulation (Net: Gross)			200	100%				1,160			1,160			1,160	
Total: Exterior Storage			**400**					**2,320**			**2,320**			**2,320**	
Total: Facilities/Pump Station M&O	**6**		**1,407**			**6**		**7,441**	**7**		**7,530**	**8**		**7,620**	

DRAFT

September 7, 2023

Parts Storeroom

Area Description	EXISTING 2023 Quantity Staff	EXISTING 2023 Quantity Space	EXISTING 2023 Area (SF)	Space Standards	Min. Size (SF)	PROJECTED 2028 Quantity Staff	PROJECTED 2028 Quantity Space	PROJECTED 2028 Area (SF)	PROJECTED 2033 Quantity Staff	PROJECTED 2033 Quantity Space	PROJECTED 2033 Area (SF)	PROJECTED 2043 Quantity Staff	PROJECTED 2043 Quantity Space	PROJECTED 2043 Area (SF)	Remarks
Office and Office Support															
Office Area															
Store Clerk	0			120		0		0	0		0	0		0	Workstation located inside Parts Storeroom
Subtotal			0					0			0			0	
Circ/Mech/Elec/Struct (Net: Gross)			Incl.	40%				0			0			0	
Electrical Room			Incl.	2.0% bldg sf	100			100			100			100	
Data/Comm. Room			Incl.	0.5% bldg sf	100			100			100			100	
Mechanical Room			Incl.	5.0% bldg sf	100			100			100			100	
Fire/Sprinkler Room			Incl.	0.5% bldg sf	80			80			80			80	
Total: Office and Office Support	**0**		**0**			**0**		**380**	**0**		**380**	**0**		**380**	
Parts Storeroom															
Office Area															
Parts Window / Counter				100				100			100			100	Inside Parts Storeroom/Adjacent to Shop Area
Storage Areas															
Shipping & Receiving Area				16 x 20			1	320		1	320		1	320	Adjacent to Loading Dock
Kitting Area				10 x 10			4	400		4	400		4	400	Configured with bins to organize upcoming projects (7-day holding, min.)
Returns Area				150				150			150			150	Designated area to process parts and tools to be returned
Large Parts Storage				210 sf/ Pl. Rack			27	5670		27	5670		27	5670	Equip with a mix of storage racks (e.g. bulk racks, pallet racks, shelving units, etc.) for
Small Parts Storage				150 sf/ 900 sf of Parts Rm.			6	945		6	945		6	945	shelving Units, Bins for consumables. Shared between all workgroups
Lab/ IC Storage				150			1	150		1	150		1	150	Climate conterolled space for storage of 12
Drum Storage				150			1	150		1	150		1	150	Space for storage of 10 55gal. Drums for
Secured Tool Storage				100			1	100		1	100		1	100	lockable space for sensitive/high cost
Handwash Sink / Em. Eye Wash				80			1	80		1	80		1	80	Locate inside parts storeroom
Subtotal			0					8,065			8,065			8,065	
Circulation/Structural (Net: Gross)			0	20%				1,613			1,613			1,613	
Electrical Room			Incl.	2.0% bldg sf	100			161			161			161	
Data/Comm. Room			Incl.	0.5% bldg sf	100			100			100			100	
Mechanical Room			Incl.	5.0% bldg sf	100			403			403			403	
Fire/Sprinkler Room			Incl.	0.5% bldg sf	80			80			80			80	
Total: Parts Storeroom			**0**					**10,423**			**10,423**			**10,423**	
Total: Shop and Shop Storage			**0**					**10,423**			**10,423**			**10,423**	
Exterior Storage															
Uncovered Area															
Loading Dock				20 x 70			1	1400		1	1400		1	1400	Adjacent to Shipping & Receiving Area under Warehouse
Subtotal			0					1,400			1,400			1,400	
Circulation (Net: Gross)			0	100%				1,400			1,400			1,400	
Total: Exterior Storage			**0**					**2,800**			**2,800**			**2,800**	
Total: Parts Storeroom	**0**		**0**			**0**		**13,603**	**0**		**13,603**	**0**		**13,603**	

DRAFT

September 7, 2023

Fleet and Employee Parking

Area Description	EXISTING 2023 Quantity Staff	EXISTING 2023 Quantity Space	EXISTING 2023 Area (SF)	Space Standards	Min. Size (SF)	PROJECTED 2028 Quantity Staff	PROJECTED 2028 Quantity Space	PROJECTED 2028 Area (SF)	PROJECTED 2033 Quantity Staff	PROJECTED 2033 Quantity Space	PROJECTED 2033 Area (SF)	PROJECTED 2043 Quantity Staff	PROJECTED 2043 Quantity Space	PROJECTED 2043 Area (SF)	Remarks
Enclosed Parking															
Mechanics															
Extra Small		0	0	8 x 15				0			0			0	
Small		2	500	10 x 25			2	500		2	500		2	500	Scissor Lift (electric), F550 Service Truck
Medium		6	2160	12 x 30			6	2160		6	2160		6	2160	4" portable trailer mount Pump-Godwin, Portable trailer mount generator
Large		0	0	12 x 35				0			0			0	
Extra Large		2	960	12 x 40			2	960		2	960		2	960	6" portable trailer mount Pump-Godwin
2X Large		0	0	12 x 45				0			0			0	
3X Large		0	0	12 x 60				0			0			0	
Electrician IC															
Extra Small			0	8 x 15				0			0			0	
Small		3	750	10 x 25			5	1250		6	1500		6	1500	Vans, Service Truck
Medium			0	12 x 30				0			0			0	
Large			0	12 x 35				0			0			0	
Extra Large			0	12 x 40				0			0			0	
2X Large			0	12 x 45				0			0			0	
3X Large			0	12 x 60				0			0			0	
Facilities/Pump Station M&O															
Extra Small			0	8 x 15				0			0			0	
Small			0	10 x 25				0			0			0	
Medium			0	12 x 30				0			0			0	
Large		4	1680	12 x 35			4	1680		5	2100		5	2100	Tanker
Extra Large			0	12 x 40				0			0			0	
2X Large			0	12 x 45				0			0			0	
3X Large			0	12 x 60				0			0			0	
Operators															
Extra Small		0	0	8 x 15			0	0		0	0		0	0	Cushman Cart (Electric?)
Small		0	0	10 x 25			0	0		0	0			0	
Medium		0	0	12 x 30			0	0		0	0		0	0	
Large		0	0	12 x 35			0	0		0	0		0	0	
Extra Large		0	0	12 x 40			0	0		0	0		0	0	
2X Large		0	0	12 x 45			0	0		0	0		0	0	
3X Large			0	12 x 60				0			0			0	
Subtotal		17	6,050				19	6,550		21	7,220		21	7,220	
Circulation/Structural (Net: Gross)			6,050	100%				6,550			7,220			7,220	
Total: Enclosed Parking		**17**	**12,100**				**19**	**13,100**		**21**	**14,440**		**21**	**14,440**	

DRAFT

September 7, 2023

Fleet and Employee Parking

Area Description	EXISTING 2023 Quantity Staff	EXISTING 2023 Quantity Space	EXISTING 2023 Area (SF)	Space Standards	Min. Size (SF)	PROJECTED 2028 Quantity Staff	PROJECTED 2028 Quantity Space	PROJECTED 2028 Area (SF)	PROJECTED 2033 Quantity Staff	PROJECTED 2033 Quantity Space	PROJECTED 2033 Area (SF)	PROJECTED 2043 Quantity Staff	PROJECTED 2043 Quantity Space	PROJECTED 2043 Area (SF)	Remarks
Covered Parking															
Mechanics															
Extra Small			0	8 x 15			1	120		1	120		1	120	forklift (gas/propane)
Small		4	1000	10 x 25			4	1000		7	1750		7	1750	Truck w/ crane, Trucks, portable trailer
Medium			0	12 x 30				0			0			0	
Large			0	12 x 35				0			0			0	
Extra Large		2	960	12 x 40			2	960		2	960		2	960	Portable trailer mount generator
2X Large			0	12 x 45				0			0			0	
3X Large		1	720	12 x 60			1	720		1	720		1	720	Manitex, 30t boom truck
Electrician IC															
Extra Small			0	8 x 15				0			0			0	
Small		1	250	10 x 25			1	250		1	250		1	250	1/4t Truck
Medium			0	12 x 30				0			0			0	
Large			0	12 x 35				0			0			0	
Extra Large			0	12 x 40				0			0			0	
2X Large			0	12 x 45				0			0			0	
3X Large			0	12 x 60				0			0			0	
Facilities/Pump Station M&O															
Extra Small			0	8 x 15				0			0			0	
Small		4	1000	10 x 25			5	1250		6	1500		6	1500	Dually Stake Bed, Trailers
Medium		4	1440	12 x 30			4	1440		5	1800		5	1800	Trucks
Large			0	12 x 35				0			0			0	
Extra Large			0	12 x 40				0			0			0	
2X Large		1	540	12 x 45			1	540		1	540		1	540	Man Lift Truck
3X Large			0	12 x 60				0			0			0	
Operators															
Extra Small			0	8 x 15				0			0			0	
Small			0	10 x 25				0			0			0	
Medium		0	0	12 x 30			0	0		0	0		0	0	Tractor (Sludge Trailer Jockey Truck)
Large			0	12 x 35				0			0			0	
Extra Large			0	12 x 40				0			0			0	
2X Large		0	0	12 x 45			0	0		0	0		0	0	
3X Large			0	12 x 60				0			0			0	
Subtotal		17	5,910				19	6,280		24	7,640		24	7,640	
Circulation/Structural (Net: Gross)			5,910	100%				6,280			7,640			7,640	
Total: Covered Parking		**17**	**11,820**				**19**	**12,560**		**24**	**15,280**		**24**	**15,280**	

DRAFT

September 7, 2023

Fleet and Employee Parking

Area Description	EXISTING 2023 Quantity Staff	EXISTING 2023 Quantity Space	EXISTING 2023 Area (SF)	Space Standards	Min. Size (SF)	PROJECTED 2028 Quantity Staff	PROJECTED 2028 Quantity Space	PROJECTED 2028 Area (SF)	PROJECTED 2033 Quantity Staff	PROJECTED 2033 Quantity Space	PROJECTED 2033 Area (SF)	PROJECTED 2043 Quantity Staff	PROJECTED 2043 Quantity Space	PROJECTED 2043 Area (SF)	Remarks
Exterior Parking															
Mechanics															
Extra Small			0	8 x 15				0			0			0	
Small		3	750	10 x 25			3	750		3	750		3	750	Truck, Trailers
Medium			0	12 x 30				0			0			0	
Large			0	12 x 35				0			0			0	
Extra Large			0	12 x 40				0			0			0	
2X Large			0	12 x 45				0			0			0	
3X Large			0	12 x 60				0			0			0	
Electrician IC															
Extra Small			0	8 x 15				0			0			0	
Small			0	10 x 25				0			0			0	
Medium			0	12 x 30				0			0			0	
Large			0	12 x 35				0			0			0	
Extra Large			0	12 x 40				0			0			0	
2X Large			0	12 x 45				0			0			0	
3X Large			0	12 x 60				0			0			0	
Facilities/Pump Station M&O															
Extra Small			0	8 x 15				0			0			0	
Small			0	10 x 25				0			0			0	
Medium			0	12 x 30				0			0			0	
Large			0	12 x 35				0			0			0	
Extra Large			0	12 x 40				0			0			0	
2X Large			0	12 x 45				0			0			0	
3X Large			0	12 x 60				0			0			0	
Operators															
Extra Small		0	0	8 x 15			0	0		0	0		0	0	
Small		0	0	10 x 25			0	0		0	0			0	
Medium		0	0	12 x 30			0	0		0	0		0	0	
Large		0	0	12 x 35			0	0		0	0		0	0	
Extra Large		0	0	12 x 40			0	0		0	0		0	0	
2X Large		0	0	12 x 45			0	0		0	0		0	0	
3X Large			0	12 x 60				0			0			0	
Subtotal		3	750				3	750		3	750		3	750	
Circulation (Net: Gross)			750	100%				750			750			750	
Total: Exterior Parking		**3**	**1,500**				**3**	**1,500**		**3**	**1,500**		**3**	**1,500**	

DRAFT

September 7, 2023

Fleet and Employee Parking

Area Description	EXISTING 2023 Quantity Staff	EXISTING 2023 Quantity Space	EXISTING 2023 Area (SF)	Space Standards	Min. Size (SF)	PROJECTED 2028 Quantity Staff	PROJECTED 2028 Quantity Space	PROJECTED 2028 Area (SF)	PROJECTED 2033 Quantity Staff	PROJECTED 2033 Quantity Space	PROJECTED 2033 Area (SF)	PROJECTED 2043 Quantity Staff	PROJECTED 2043 Quantity Space	PROJECTED 2043 Area (SF)	Remarks
Employee and Visitor Parking															
Mechanics															
Employee		6	972	9 x 18			7	1134		8	1296		8	1296	
Visitor		0	0	9 x 18			1	162		1	162		1	162	
Accessible		0	0	13 x 18			1	234		1	234		1	234	
Electrician IC															
Employee		6	972	9 x 18			8	1296		9	1458		9	1458	
Visitor		0	0	9 x 18			0	0		0	0		0	0	
Accessible		0	0	13 x 18			0	0		0	0		0	0	
Facilities/Pump Station M&O															
Employee		6	972	9 x 18			6	972		7	1134		8	1296	
Visitor		0	0	9 x 18			0	0		0	0		0	0	
Accessible		0	0	13 x 18			0	0		0	0		0	0	
Operators															
Employee		0	0	9 x 18			0	0		0	0		0	0	
Visitor		0	0	9 x 18			0	0		0	0		0	0	
Accessible		0	0	13 x 18			0	0		0	0		0	0	
Subtotal		18	2,916				23	3,798		26	4,284		27	4,446	
Circulation (Net: Gross)			2,916	100%				3,798			4,284			4,446	
Total: Employee and Visitor Parking		**18**	**5,832**				**23**	**7,596**		**26**	**8,568**		**27**	**8,892**	

DRAFT

B

Appendix B. Programming Questionnaires

DRAFT

DRAFT

Kitsap County

Central Kitsap Treatment Plant

Poulsbo, Washington

Name: **Electricians and IC Technicians**

Dept.: **CK Plant – Electrical IC Workgroup**

Phone:

Email: **dgraham@kitsap.gov**

Please provide as much information as possible for each section of this questionnaire. This information will be used in the programming effort for Central Kitsap Treatment Plant Central Kitsap Treatment Plant (CKTP) Maintenance Building. Your Participation is greatly appreciated.

Return Questionnaire to Oliver Young at oliver.young@hdrinc.com via email by May 31, 2023.

General Information

Function: Please describe the primary function and activities of the administrative/office component of your department or group.

This survey was submitted by the Electrician and Instrument Tech Workgroup

What is your vision for the project? (Describe your hopes, concerns, and needs)

Improved storage for electrical and instrumentation supplies in a climate-controlled space. If workgroup is relocated within the Maintenance Bldg, then maintain current office workspace with room for additional staff.

What is the biggest "pain point(s)" that you are currently experiencing with your facilities or operation?

Current workbench space is not adequate. Need improved workbenches with roll-up door.

Operation: Please provide security concerns/ requirements, maximum number of simultaneous visitors and frequency of visitors to your department or group, and the necessity for after-hours access to the facility.

Security Issues:

Lockable storage for high value (walk-away) equipment such as PLC's, I/O cards and instruments

Simultaneous Visitors/Frequency:

Vendors only.

DRAFT

After hours access? Why?

Only during call-out events

Staffing

Please provide an organization chart of your department or group (or sketch one on the back of this sheet). The Planning Team wishes to determine existing staffing levels and project for the future. Please list staff in your group or department.

Position		Staffing Projection [Enter total staff]				Shift Hours			Comments [Please note the beginning and end times for shift(s)]
		Existing	+5 years	+10 years	+20 years				
1	Electrician IC Supervisor	1	1	1	1	☒ Day ☐ GY	☐ Swing ☐ Other	☐ F/T ☐ P/T	0700 -1530
2	Electrician	2	3	4	4	☒ Day ☐ GY	☐ Swing ☐ Other	☐ F/T ☐ P/T	Same
3	Instrument & Control Technician	3	4	4	4	☒ Day ☐ GY	☐ Swing ☐ Other	☐ F/T ☐ P/T	Same
4						☐ Day ☐ GY	☐ Swing ☐ Other	☐ F/T ☐ P/T	
5						☐ Day ☐ GY	☐ Swing ☐ Other	☐ F/T ☐ P/T	
6						☐ Day ☐ GY	☐ Swing ☐ Other	☐ F/T ☐ P/T	
7						☐ Day ☐ GY	☐ Swing ☐ Other	☐ F/T ☐ P/T	
8						☐ Day ☐ GY	☐ Swing ☐ Other	☐ F/T ☐ P/T	
9						☐ Day ☐ GY	☐ Swing ☐ Other	☐ F/T ☐ P/T	
10						☐ Day ☐ GY	☐ Swing ☐ Other	☐ F/T ☐ P/T	
11						☐ Day ☐ GY	☐ Swing ☐ Other	☐ F/T ☐ P/T	
12						☐ Day ☐ GY	☐ Swing ☐ Other	☐ F/T ☐ P/T	
13						☐ Day ☐ GY	☐ Swing ☐ Other	☐ F/T ☐ P/T	
14						☐ Day ☐ GY	☐ Swing ☐ Other	☐ F/T ☐ P/T	
15						☐ Day ☐ GY	☐ Swing ☐ Other	☐ F/T ☐ P/T	
16						☐ Day ☐ GY	☐ Swing ☐ Other	☐ F/T ☐ P/T	
						☐ Day	☐ Swing	☐ F/T	

DRAFT

	Position	Staffing Projection [Enter total staff]				Shift Hours			Comments [Please note the beginning and end times for shift(s)]
		Existing	+5 years	+10 years	+20 years				
17						☐ GY	☐ Other	☐ P/T	
18						☐ Day ☐ GY	☐ Swing ☐ Other	☐ F/T ☐ P/T	
	Total	**6**	**8**	**9**	**9**				

Employee Vehicles and Parking

Please **provide a detailed vehicle inventory** and summarize below, by vehicle type, the vehicles or pieces of equipment used by your department/group. Be prepared to discuss size, quantity, preferred storage method, and growth through the year future.

Vehicle Type	Vehicle Quantities/Projections [Enter total vehicles]				Vehicle Size (Feet) [Enter quantity]					Parking Requirements [Check required]
	Existing	+5 years	+10 years	+20 years	XS 8x10	SM 9x18	MD 10x20	LG 12x30	XL 12x40	
Personal Vehicle	*6*	8	9	9						☐ Uncovered ☐ Enclosed ☐ Covered
										☐ Uncovered ☐ Enclosed ☐ Covered
										☐ Uncovered ☐ Enclosed ☐ Covered
										☐ Uncovered ☐ Enclosed ☐ Covered
										☐ Uncovered ☐ Enclosed ☐ Covered
										☐ Uncovered ☐ Enclosed ☐ Covered
										☐ Uncovered ☐ Enclosed ☐ Covered
										☐ Uncovered ☐ Enclosed ☐ Covered
										☐ Uncovered ☐ Enclosed ☐ Covered

DRAFT

										☐ Uncovered ☐ Enclosed ☐ Covered
										☐ Uncovered ☐ Enclosed ☐ Covered
										☐ Uncovered ☐ Enclosed ☐ Covered
										☐ Uncovered ☐ Enclosed ☐ Covered
Total										

Fleet Vehicles Maintained/Parked

Please **provide a detailed vehicle inventory** and summarize below, by vehicle type, the vehicles or pieces of equipment used by your department/group. Be prepared to discuss size, quantity, preferred storage method, and growth through the year future. Please also identify and include all Non-Revenue Vehicles.

Vehicle Type	**Vehicle Quantities/Projections** [Enter total vehicles]				**Vehicle Size (Feet)** [Enter quantity]					**Parking Requirements** [Check required]	
	Existing	**+5 years**	**+10 years**	**+20 years**	**MD 10x20**	**LG 12x30**	**XL 12x40**	**XXL 12x45**	**XXXL 12x60**		
Van - Sprinter ☐ Gasoline ☐ Diesel ☐ CNG/LNG ☐ Electric ☐ Other	*1*	2	2	2						☐ Maintained ☐ Parked	☐ Uncovered ☐ Covered ☐ Enclosed
Van - Connect ☐ Gasoline ☐ Diesel ☐ CNG/LNG ☐ Electric ☐ Other	*1*	1	2	2						☐ Maintained ☐ Parked	☐ Uncovered ☐ Covered ☐ Enclosed
Service Truck ☐ Gasoline ☐ Diesel ☐ CNG/LNG ☐ Electric ☐ Other	*1*	2	2	2						☐ Maintained ☐ Parked	☐ Uncovered ☐ Covered ☐ Enclosed
¼ Truck – GMC Canyon ☐ Gasoline ☐ Diesel ☐ CNG/LNG ☐ Electric ☐ Other	*1*	1	1	1						☐ Maintained ☐ Parked	☐ Uncovered ☐ Covered ☐ Enclosed
										☐ Maintained ☐ Parked	☐ Uncovered

DRAFT

Vehicle Type	Vehicle Quantities/Projections [Enter total vehicles]				Vehicle Size (Feet) [Enter quantity]					Parking Requirements [Check required]	
	Existing	+5 years	+10 years	+20 years	MD 10x20	LG 12x30	XL 12x40	XXL 12x45	XXXL 12x60		
☐ Gasoline ☐ Diesel ☐ CNG/LNG ☐ Electric ☐ Other											☐ Covered ☐ Enclosed
☐ Gasoline ☐ Diesel ☐ CNG/LNG ☐ Electric ☐ Other										☐ Maintained ☐ Parked	☐ Uncovered ☐ Covered ☐ Enclosed
☐ Gasoline ☐ Diesel ☐ CNG/LNG ☐ Electric ☐ Other										☐ Maintained ☐ Parked	☐ Uncovered ☐ Covered ☐ Enclosed
☐ Gasoline ☐ Diesel ☐ CNG/LNG ☐ Electric ☐ Other										☐ Maintained ☐ Parked	☐ Uncovered ☐ Covered ☐ Enclosed
☐ Gasoline ☐ Diesel ☐ CNG/LNG ☐ Electric ☐ Other										☐ Maintained ☐ Parked	☐ Uncovered ☐ Covered ☐ Enclosed
☐ Gasoline ☐ Diesel ☐ CNG/LNG ☐ Electric ☐ Other										☐ Maintained ☐ Parked	☐ Uncovered ☐ Covered ☐ Enclosed
☐ Gasoline ☐ Diesel ☐ CNG/LNG ☐ Electric ☐ Other										☐ Maintained ☐ Parked	☐ Uncovered ☐ Covered ☐ Enclosed
☐ Gasoline ☐ Diesel ☐ CNG/LNG ☐ Electric ☐ Other										☐ Maintained ☐ Parked	☐ Uncovered ☐ Covered ☐ Enclosed
☐ Gasoline ☐ Diesel ☐ CNG/LNG ☐ Electric ☐ Other										☐ Maintained ☐ Parked	☐ Uncovered ☐ Covered ☐ Enclosed
☐ Gasoline ☐ Diesel ☐ CNG/LNG ☐ Electric ☐ Other										☐ Maintained ☐ Parked	☐ Uncovered ☐ Covered ☐ Enclosed
☐ Gasoline ☐ Diesel ☐ CNG/LNG ☐ Electric ☐ Other										☐ Maintained ☐ Parked	☐ Uncovered ☐ Covered ☐ Enclosed

DRAFT

Vehicle Type	Vehicle Quantities/Projections [Enter total vehicles]				Vehicle Size (Feet) [Enter quantity]					Parking Requirements [Check required]	
	Existing	+5 years	+10 years	+20 years	MD 10x20	LG 12x30	XL 12x40	XXL 12x45	XXXL 12x60		
☐ Gasoline ☐ Diesel ☐ CNG/LNG ☐ Electric ☐ Other										☐ Maintained ☐ Parked	☐ Uncovered ☐ Covered ☐ Enclosed
☐ Gasoline ☐ Diesel ☐ CNG/LNG ☐ Electric ☐ Other										☐ Maintained ☐ Parked	☐ Uncovered ☐ Covered ☐ Enclosed
Total	**4**	**6**	**7**	**7**							

Existing Space

Briefly list all spaces utilized by your department/group and be prepared to discuss your current facilities, where they are located, and any current space inadequacies, etc. **Provide a floor plan or sketch if available.** Describe your existing space and its location (include existing and proposed spaces by function).

Space	Size (L x W)	Function/Inadequacies
Bldg 103A	24x36	Office Space – individual office workstations are at capacity. Very small workbench to test run PLC's, HMI's and PC's
Parts Storage Bldg 110	12x25	Parts stored upstairs. Not secured. Need smaller lockable storage for "attractive assets"
Work Area Bldg 110	25x25	Electrical power issues. Space is climate assisted.

DRAFT

Space	Size (L x W)	Function/Inadequacies

DRAFT

Space	Size (L x W)	Function/Inadequacies

Office Space

Please list any office requirements for your department/group. Please list the title of the office and if it is an open or closed office/workstation. Please briefly describe the filing/furniture needs, function and the amount of time each day spent in the office.

	Space	Approx. Size	Individual filing needs and furniture for the space	Space Adjacency
1	Title/Position: Electrical Supervisor ☒ Office ☐ Workstation ☐ Shared Office	12x14	☐ Modular Form ☐ Desk ☐ Credenza ☐ Side Table ☐ Bookcase ☐ Desk Chair ☐ Side Chair ☐ File Cabinet ☐ Whiteboard	☐ Primary ☐ Secondary
2	Title/Position: Electrician / IC Techs ☐ Office ☒ Workstation ☒ Shared Office	6x6	☐ Modular Form ☐ Desk ☐ Credenza ☐ Side Table ☐ Bookcase ☐ Desk Chair ☐ Side Chair ☐ Whiteboard ☐ File Cabinet	☐ Primary ☐ Secondary
3	Title/Position: ☐ Office ☐ Workstation ☐ Shared Office		☐ Modular Form ☐ Desk ☐ Credenza ☐ Side Table ☐ Bookcase ☐ Desk Chair ☐ Side Chair ☐ Whiteboard ☐ File Cabinet	☐ Primary ☐ Secondary
4	Title/Position:		☐ Modular Form ☐ Desk ☐ Credenza	☐ Primary

DRAFT

	☐ Office ☐ Workstation ☐ Shared Office		☐ Side Table ☐ Bookcase ☐ Desk Chair ☐ Side Chair ☐ Whiteboard ☐ File Cabinet	☐ Secondary
5	Title/Position: ☐ Office ☐ Workstation ☐ Shared Office		☐ Modular Form ☐ Desk ☐ Credenza ☐ Side Table ☐ Bookcase ☐ Desk Chair ☐ Side Chair ☐ Whiteboard ☐ File Cabinet	☐ Primary ☐ Secondary
6	Title/Position: ☐ Office ☐ Workstation ☐ Shared Office		☐ Modular Form ☐ Desk ☐ Credenza ☐ Side Table ☐ Bookcase ☐ Desk Chair ☐ Side Chair ☐ Whiteboard ☐ File Cabinet	☐ Primary ☐ Secondary
7	Title/Position: ☐ Office ☐ Workstation ☐ Shared Office		☐ Modular Form ☐ Desk ☐ Credenza ☐ Side Table ☐ Bookcase ☐ Desk Chair ☐ Side Chair ☐ Whiteboard ☐ File Cabinet	☐ Primary ☐ Secondary
8	Title/Position: ☐ Office ☐ Workstation ☐ Shared Office		☐ Modular Form ☐ Desk ☐ Credenza ☐ Side Table ☐ Bookcase ☐ Desk Chair ☐ Side Chair ☐ Whiteboard ☐ File Cabinet	☐ Primary ☐ Secondary
9	Title/Position: ☐ Office ☐ Workstation ☐ Shared Office		☐ Modular Form ☐ Desk ☐ Credenza ☐ Side Table ☐ Bookcase ☐ Desk Chair ☐ Side Chair ☐ Whiteboard ☐ File Cabinet	☐ Primary ☐ Secondary
10	Title/Position: ☐ Office ☐ Workstation ☐ Shared Office		☐ Modular Form ☐ Desk ☐ Credenza ☐ Side Table ☐ Bookcase ☐ Desk Chair ☐ Side Chair ☐ Whiteboard ☐ File Cabinet	☐ Primary ☐ Secondary

DRAFT

Shared and Support Spaces

Please list all spaces necessary for your department/group to function effectively and efficiently. Please list **any spaces** you feel are necessary for the effective, efficient function of your administrative department or group in the space provided below. Please provide your initial thoughts on features and furnishing needs for each space.

Shared and Support Space Name	Number of people	Adjacency	Special Features/Furniture/Equipment

DRAFT

Shared and Support Space Name	Number of people	Adjacency	Special Features/Furniture/Equipment

DRAFT

Shop/Work Area Requirements

Please list all shop or work area requirements for your department/group. Please list the title of the space and the relationship/adjacency it may have to other shop spaces. Please briefly describe the equipment needs and any special design features or finishes needed for the shop.

Shop Name	Adjacency	Approx. Size	Specific Equipment Items	Special Features/Finishes
See existing requirements				
Instrument Calibration Shop				SCADA Master Plan calls for establishing a calibration program

DRAFT

Storage

Please list any special storage requirements for your department/group. Please list types of materials, size of storage requirement, storage type, security requirements, and any special comments that you may have. Include all storage requirements that are currently off-site which you would like to move on-site and any storage on-site that could be stored off-site.

Material/Item	Approximate Size	Storage Type	Security	Comments
Parts storage	24x40	☐ Uncovered ☐ Covered ☒ Enclosed	☒ Secure ☐ Open	All or portion of must be climate controlled for sensitive electronic components
		☐ Uncovered ☐ Covered ☐ Enclosed	☐ Secure ☐ Open	
		☐ Uncovered ☐ Covered ☐ Enclosed	☐ Secure ☐ Open	
		☐ Uncovered ☐ Covered ☐ Enclosed	☐ Secure ☐ Open	
		☐ Uncovered ☐ Covered ☐ Enclosed	☐ Secure ☐ Open	
		☐ Uncovered ☐ Covered ☐ Enclosed	☐ Secure ☐ Open	
		☐ Uncovered ☐ Covered ☐ Enclosed	☐ Secure ☐ Open	
		☐ Uncovered ☐ Covered ☐ Enclosed	☐ Secure ☐ Open	
		☐ Uncovered ☐ Covered ☐ Enclosed	☐ Secure ☐ Open	
		☐ Uncovered ☐ Covered ☐ Enclosed	☐ Secure ☐ Open	
		☐ Uncovered ☐ Covered ☐ Enclosed	☐ Secure ☐ Open	

DRAFT

Material/Item	Approximate Size	Storage Type	Security	Comments
		☐ Uncovered ☐ Covered ☐ Enclosed	☐ Secure ☐ Open	
		☐ Uncovered ☐ Covered ☐ Enclosed	☐ Secure ☐ Open	
		☐ Uncovered ☐ Covered ☐ Enclosed	☐ Secure ☐ Open	
		☐ Uncovered ☐ Covered ☐ Enclosed	☐ Secure ☐ Open	
		☐ Uncovered ☐ Covered ☐ Enclosed	☐ Secure ☐ Open	
		☐ Uncovered ☐ Covered ☐ Enclosed	☐ Secure ☐ Open	
		☐ Uncovered ☐ Covered ☐ Enclosed	☐ Secure ☐ Open	
		☐ Uncovered ☐ Covered ☐ Enclosed	☐ Secure ☐ Open	
		☐ Uncovered ☐ Covered ☐ Enclosed	☐ Secure ☐ Open	
		☐ Uncovered ☐ Covered ☐ Enclosed	☐ Secure ☐ Open	
		☐ Uncovered ☐ Covered ☐ Enclosed	☐ Secure ☐ Open	
		☐ Uncovered ☐ Covered ☐ Enclosed	☐ Secure ☐ Open	
		☐ Uncovered ☐ Covered ☐ Enclosed	☐ Secure ☐ Open	
		☐ Uncovered ☐ Covered ☐ Enclosed	☐ Secure ☐ Open	

DRAFT

Material/Item	Approximate Size	Storage Type	Security	Comments
		☐ Uncovered ☐ Covered ☐ Enclosed	☐ Secure ☐ Open	

Emergency Event Requirements

Living Facilities: Please describe the type of living spaces required to accommodate your department/group for three days after an event. (e.g. bunk areas, kitchen, showers)

Current office workspace has small kitchen with fridge, microwave and table for maximum of 6. Bldg 103a has toilet facilities but no shower.

Emergency Facility Systems: Please describe the type of minimal functions/operations required to accommodate your department/group for three days after an event without outside assistance. (e.g. water storage, radio receiver, fuel)

Other Data and Information

Alternative Fuels: Do you currently have any alternative fueled vehicles? If so, please specify the type of fuel used (Electric, CNG, LNG, propane, etc.). If not, does **Kitsap County**
plan to use this technology in the near future?

Please provide the following information to assist the Planning Team in their programming efforts.

✓ As-built floor plans of the current facilities.

DRAFT

- ✓ Site plan or survey of the current site. Please include information on other sites/facilities if they are utilized by **Kitsap County** but not located on the existing site.

Thank you for your time in completing this questionnaire.

Return Questionnaire to Oliver Young at oliver.young@hdrinc.com via email by May 31, 2023.

DRAFT

Kitsap County

Central Kitsap Treatment Plant

Poulsbo, Washington

Name: **Facility / Pump Station MO Specialists**

Dept.: **CK Plant**

Phone:

Email: **dgraham@kitsap.gov**

Please provide as much information as possible for each section of this questionnaire. This information will be used in the programming effort for Central Kitsap Treatment Plant Central Kitsap Treatment Plant (CKTP) Maintenance Building. Your Participation is greatly appreciated.

Return Questionnaire to Oliver Young at oliver.young@hdrinc.com via email by May 31, 2023.

General Information

Function: Please describe the primary function and activities of the administrative/office component of your department or group.

This survey was submitted by the Facility / Pump Station M&O Workgroup

What is your vision for the project? (Describe your hopes, concerns, and needs)

Workgroup currently occupies the old chlorine building (Bldg 104). If workgroup is relocated within the Maintenance Bldg, then maintain current office workspace with room for additional staff. Will also need enclosed and secured storage for groundskeeping equipment.

What is the biggest "pain point(s)" that you are currently experiencing with your facilities or operation?

Need improved workbenches and ventilation with roll-up door. Work group maintains small engine equipment for groundskeeping in addition to performing carpentry work/projects.

Operation: Please provide security concerns/ requirements, maximum number of simultaneous visitors and frequency of visitors to your department or group, and the necessity for after-hours access to the facility.

Security Issues:

Lockable storage for high value (walk-away) equipment such as chainsaws, trimmers, portable electric tools and other.

Simultaneous Visitors/Frequency:

DRAFT

Vendors only.

After hours access? Why?

Only during call-out events

Staffing

Please provide an organization chart of your department or group (or sketch one on the back of this sheet). The Planning Team wishes to determine existing staffing levels and project for the future. Please list staff in your group or department.

	Position	Staffing Projection [Enter total staff]				Shift Hours			Comments [Please note the beginning and end times for shift(s)]
		Existing	+5 years	+10 years	+20 years				
1	Facility / Pump Station MO Crew Supervisor	1	1	1	1	☒ Day ☐ GY	☐ Swing ☐ Other	☐ F/T ☐ P/T	0700 -1530
2	Facility M&O Specialists	5	5	6	7	☒ Day ☐ GY	☐ Swing ☐ Other	☐ F/T ☐ P/T	Same
3						☒ Day ☐ GY	☐ Swing ☐ Other	☐ F/T ☐ P/T	
4						☐ Day ☐ GY	☐ Swing ☐ Other	☐ F/T ☐ P/T	
5						☐ Day ☐ GY	☐ Swing ☐ Other	☐ F/T ☐ P/T	
6						☐ Day ☐ GY	☐ Swing ☐ Other	☐ F/T ☐ P/T	
7						☐ Day ☐ GY	☐ Swing ☐ Other	☐ F/T ☐ P/T	
8						☐ Day ☐ GY	☐ Swing ☐ Other	☐ F/T ☐ P/T	
9						☐ Day ☐ GY	☐ Swing ☐ Other	☐ F/T ☐ P/T	
10						☐ Day ☐ GY	☐ Swing ☐ Other	☐ F/T ☐ P/T	
11						☐ Day ☐ GY	☐ Swing ☐ Other	☐ F/T ☐ P/T	
12						☐ Day ☐ GY	☐ Swing ☐ Other	☐ F/T ☐ P/T	
13						☐ Day ☐ GY	☐ Swing ☐ Other	☐ F/T ☐ P/T	
14						☐ Day ☐ GY	☐ Swing ☐ Other	☐ F/T ☐ P/T	
15						☐ Day ☐ GY	☐ Swing ☐ Other	☐ F/T ☐ P/T	

DRAFT

	Position	Staffing Projection [Enter total staff]				Shift Hours	Comments [Please note the beginning and end times for shift(s)]
		Existing	+5 years	+10 years	+20 years		
16						☐ Day ☐ Swing ☐ F/T ☐ GY ☐ Other ☐ P/T	
17						☐ Day ☐ Swing ☐ F/T ☐ GY ☐ Other ☐ P/T	
18						☐ Day ☐ Swing ☐ F/T ☐ GY ☐ Other ☐ P/T	
	Total	**6**	**6**	**7**	**8**		

Employee Vehicles and Parking

Please **provide a detailed vehicle inventory** and summarize below, by vehicle type, the vehicles or pieces of equipment used by your department/group. Be prepared to discuss size, quantity, preferred storage method, and growth through the year future.

Vehicle Type	Vehicle Quantities/Projections [Enter total vehicles]				Vehicle Size (Feet) [Enter quantity]					Parking Requirements [Check required]
	Existing	+5 years	+10 years	+20 years	XS 8x10	SM 9x18	MD 10x20	LG 12x30	XL 12x40	
Personal Vehicle	*6*	6	7	8						☐ Uncovered ☐ Enclosed ☐ Covered
										☐ Uncovered ☐ Enclosed ☐ Covered
										☐ Uncovered ☐ Enclosed ☐ Covered
										☐ Uncovered ☐ Enclosed ☐ Covered
										☐ Uncovered ☐ Enclosed ☐ Covered
										☐ Uncovered ☐ Enclosed ☐ Covered
										☐ Uncovered ☐ Enclosed ☐ Covered
										☐ Uncovered ☐ Enclosed ☐ Covered

DRAFT

										☐ Uncovered ☐ Enclosed ☐ Covered
										☐ Uncovered ☐ Enclosed ☐ Covered
										☐ Uncovered ☐ Enclosed ☐ Covered
										☐ Uncovered ☐ Enclosed ☐ Covered
										☐ Uncovered ☐ Enclosed ☐ Covered
Total	**6**	**6**	**7**	**8**						

Fleet Vehicles Maintained/Parked

Please **provide a detailed vehicle inventory** and summarize below, by vehicle type, the vehicles or pieces of equipment used by your department/group. Be prepared to discuss size, quantity, preferred storage method, and growth through the year future. Please also identify and include all Non-Revenue Vehicles.

Vehicle Type	**Vehicle Quantities/Projections** [Enter total vehicles]				**Vehicle Size (Feet)** [Enter quantity]					**Parking Requirements** [Check required]	
	Existing	**+5 years**	**+10 years**	**+20 years**	**MD 10x20**	**LG 12x30**	**XL 12x40**	**XXL 12x45**	**XXXL 12x60**		
Man lift truck ☐ Gasoline ☐ Diesel ☐ CNG/LNG ☐ Electric ☐ Other	*1*	1	1	1						☐ Maintained ☒ Parked	☐ Uncovered ☐ Covered ☐ Enclosed
1 ton dually stake bed ☐ Gasoline ☐ Diesel ☐ CNG/LNG ☐ Electric ☐ Other	*1*	1	1	1						☐ Maintained ☒ Parked	☐ Uncovered ☐ Covered ☐ Enclosed
Tankers ☐ Gasoline ☐ Diesel ☐ CNG/LNG ☐ Electric ☐ Other	*4*	4	5	5						☐ Maintained ☐ Parked	☐ Uncovered ☒ Covered ☐ Enclosed
¾ ton pickup trucks ☐ Gasoline ☐ Diesel ☐ CNG/LNG ☐ Electric ☐ Other	*2*	3	3	3						☐ Maintained ☒ Parked	☐ Uncovered ☐ Covered ☐ Enclosed

DRAFT

Vehicle Type	Vehicle Quantities/Projections [Enter total vehicles]				Vehicle Size (Feet) [Enter quantity]					Parking Requirements [Check required]	
	Existing	+5 years	+10 years	+20 years	MD 10x20	LG 12x30	XL 12x40	XXL 12x45	XXXL 12x60		
¼ ton crew cab (Colorado) ☐ Gasoline ☐ Diesel ☐ CNG/LNG ☐ Electric ☐ Other	*1*	1	2	2						☐ Maintained ☒ Parked	☐ Uncovered ☐ Covered ☐ Enclosed
1 ton service truck ☐ Gasoline ☐ Diesel ☐ CNG/LNG ☐ Electric ☐ Other	*1*	1	1	1						☐ Maintained ☒ Parked	☐ Uncovered ☐ Covered ☐ Enclosed
Trailers ☐ Gasoline ☐ Diesel ☐ CNG/LNG ☐ Electric ☐ Other	*3*	3	4	4	x					☐ Maintained ☐ Parked	☐ Uncovered ☐ Covered ☐ Enclosed
☐ Gasoline ☐ Diesel ☐ CNG/LNG ☐ Electric ☐ Other										☐ Maintained ☐ Parked	☐ Uncovered ☐ Covered ☐ Enclosed
☐ Gasoline ☐ Diesel ☐ CNG/LNG ☐ Electric ☐ Other										☐ Maintained ☐ Parked	☐ Uncovered ☐ Covered ☐ Enclosed
☐ Gasoline ☐ Diesel ☐ CNG/LNG ☐ Electric ☐ Other										☐ Maintained ☐ Parked	☐ Uncovered ☐ Covered ☐ Enclosed
☐ Gasoline ☐ Diesel ☐ CNG/LNG ☐ Electric ☐ Other										☐ Maintained ☐ Parked	☐ Uncovered ☐ Covered ☐ Enclosed
☐ Gasoline ☐ Diesel ☐ CNG/LNG ☐ Electric ☐ Other										☐ Maintained ☐ Parked	☐ Uncovered ☐ Covered ☐ Enclosed
☐ Gasoline ☐ Diesel ☐ CNG/LNG ☐ Electric ☐ Other										☐ Maintained ☐ Parked	☐ Uncovered ☐ Covered ☐ Enclosed
☐ Gasoline ☐ Diesel ☐ CNG/LNG ☐ Electric ☐ Other										☐ Maintained ☐ Parked	☐ Uncovered ☐ Covered ☐ Enclosed
☐ Gasoline ☐ Diesel ☐ CNG/LNG ☐ Electric ☐ Other										☐ Maintained ☐ Parked	☐ Uncovered ☐ Covered ☐ Enclosed

DRAFT

Vehicle Type	Vehicle Quantities/Projections [Enter total vehicles]				Vehicle Size (Feet) [Enter quantity]					Parking Requirements [Check required]	
	Existing	+5 years	+10 years	+20 years	MD 10x20	LG 12x30	XL 12x40	XXL 12x45	XXXL 12x60		
☐ Gasoline ☐ Diesel ☐ CNG/LNG ☐ Electric ☐ Other										☐ Maintained ☐ Parked	☐ Uncovered ☐ Covered ☐ Enclosed
☐ Gasoline ☐ Diesel ☐ CNG/LNG ☐ Electric ☐ Other										☐ Maintained ☐ Parked	☐ Uncovered ☐ Covered ☐ Enclosed
☐ Gasoline ☐ Diesel ☐ CNG/LNG ☐ Electric ☐ Other										☐ Maintained ☐ Parked	☐ Uncovered ☐ Covered ☐ Enclosed
Total	**10**	**11**	**13**	**13**							

Existing Space

Briefly list all spaces utilized by your department/group and be prepared to discuss your current facilities, where they are located, and any current space inadequacies, etc. **Provide a floor plan or sketch if available.** Describe your existing space and its location (include existing and proposed spaces by function).

Space	Size (L x W)	Function/Inadequacies
Office space	12x20	Adequate office workstations. Heating and AC is MisterCools
Workshop	14x24	Carpenters shop lacks proper ventilation and exhaust. Shares space with small engine repair.
Storage Tools	10x10	Converted closed is inadequate

DRAFT

Space	Size (L x W)	Function/Inadequacies
Storage Equipment	12x24	Unsecured storage of groundskeeping equipment. Small fuel storage has not secondary containment

DRAFT

Space	Size (L x W)	Function/Inadequacies

Office Space

Please list any office requirements for your department/group. Please list the title of the office and if it is an open or closed office/workstation. Please briefly describe the filing/furniture needs, function and the amount of time each day spent in the office.

	Space	Approx. Size	Individual filing needs and furniture for the space	Space Adjacency
1	Title/Position: Facility Supervisor ☒ Office ☐ Workstation ☐ Shared Office	10x12	☐ Modular Form ☐ Desk ☐ Credenza ☐ Side Table ☐ Bookcase ☐ Desk Chair	☐ Primary ☐ Secondary

DRAFT

			☐ Side Chair ☐ File Cabinet ☐ Whiteboard	
2	Title/Position: M&O Specialists ☐ Office ☐ Workstation ☒ Shared Office	8x8 each	☐ Modular Form ☐ Desk ☐ Credenza ☐ Side Table ☐ Bookcase ☐ Desk Chair ☐ Side Chair ☐ Whiteboard ☐ File Cabinet	☐ Primary ☐ Secondary
3	Title/Position: ☐ Office ☐ Workstation ☐ Shared Office		☐ Modular Form ☐ Desk ☐ Credenza ☐ Side Table ☐ Bookcase ☐ Desk Chair ☐ Side Chair ☐ Whiteboard ☐ File Cabinet	☐ Primary ☐ Secondary
4	Title/Position: ☐ Office ☐ Workstation ☐ Shared Office		☐ Modular Form ☐ Desk ☐ Credenza ☐ Side Table ☐ Bookcase ☐ Desk Chair ☐ Side Chair ☐ Whiteboard ☐ File Cabinet	☐ Primary ☐ Secondary
5	Title/Position: ☐ Office ☐ Workstation ☐ Shared Office		☐ Modular Form ☐ Desk ☐ Credenza ☐ Side Table ☐ Bookcase ☐ Desk Chair ☐ Side Chair ☐ Whiteboard ☐ File Cabinet	☐ Primary ☐ Secondary
6	Title/Position: ☐ Office ☐ Workstation ☐ Shared Office		☐ Modular Form ☐ Desk ☐ Credenza ☐ Side Table ☐ Bookcase ☐ Desk Chair ☐ Side Chair ☐ Whiteboard ☐ File Cabinet	☐ Primary ☐ Secondary
7	Title/Position: ☐ Office ☐ Workstation ☐ Shared Office		☐ Modular Form ☐ Desk ☐ Credenza ☐ Side Table ☐ Bookcase ☐ Desk Chair ☐ Side Chair ☐ Whiteboard ☐ File Cabinet	☐ Primary ☐ Secondary
8	Title/Position: ☐ Office ☐ Workstation ☐ Shared Office		☐ Modular Form ☐ Desk ☐ Credenza ☐ Side Table ☐ Bookcase ☐ Desk Chair ☐ Side Chair ☐ Whiteboard ☐ File Cabinet	☐ Primary ☐ Secondary
9	Title/Position: ☐ Office ☐ Workstation ☐ Shared Office		☐ Modular Form ☐ Desk ☐ Credenza ☐ Side Table ☐ Bookcase ☐ Desk Chair ☐ Side Chair ☐ Whiteboard ☐ File Cabinet	☐ Primary ☐ Secondary
10	Title/Position: ☐ Office ☐ Workstation ☐ Shared Office		☐ Modular Form ☐ Desk ☐ Credenza ☐ Side Table ☐ Bookcase ☐ Desk Chair ☐ Side Chair ☐ Whiteboard ☐ File Cabinet	☐ Primary ☐ Secondary

DRAFT

Shared and Support Spaces

Please list all spaces necessary for your department/group to function effectively and efficiently. Please list **any spaces** you feel are necessary for the effective, efficient function of your administrative department or group in the space provided below. Please provide your initial thoughts on features and furnishing needs for each space.

Shared and Support Space Name	Number of people	Adjacency	Special Features/Furniture/Equipment

DRAFT

Shared and Support Space Name	Number of people	Adjacency	Special Features/Furniture/Equipment

DRAFT

Shop/Work Area Requirements

Please list all shop or work area requirements for your department/group. Please list the title of the space and the relationship/adjacency it may have to other shop spaces. Please briefly describe the equipment needs and any special design features or finishes needed for the shop.

Shop Name	Adjacency	Approx. Size	Specific Equipment Items	Special Features/Finishes

DRAFT

Storage

Please list any special storage requirements for your department/group. Please list types of materials, size of storage requirement, storage type, security requirements, and any special comments that you may have. Include all storage requirements that are currently off-site which you would like to move on-site and any storage on-site that could be stored off-site.

Material/Item	Approximate Size	Storage Type	Security	Comments
Small equipment	12x24	☐ Uncovered ☐ Covered ☒ Enclosed	☒ Secure ☐ Open	Locked storage for small equipment and portable power tools
		☐ Uncovered ☐ Covered ☐ Enclosed	☐ Secure ☐ Open	
		☐ Uncovered ☐ Covered ☐ Enclosed	☐ Secure ☐ Open	
		☐ Uncovered ☐ Covered ☐ Enclosed	☐ Secure ☐ Open	
		☐ Uncovered ☐ Covered ☐ Enclosed	☐ Secure ☐ Open	
		☐ Uncovered ☐ Covered ☐ Enclosed	☐ Secure ☐ Open	
		☐ Uncovered ☐ Covered ☐ Enclosed	☐ Secure ☐ Open	
		☐ Uncovered ☐ Covered ☐ Enclosed	☐ Secure ☐ Open	
		☐ Uncovered ☐ Covered ☐ Enclosed	☐ Secure ☐ Open	
		☐ Uncovered ☐ Covered ☐ Enclosed	☐ Secure ☐ Open	
		☐ Uncovered ☐ Covered ☐ Enclosed	☐ Secure ☐ Open	
		☐ Uncovered ☐ Covered ☐ Enclosed	☐ Secure ☐ Open	

DRAFT

Material/Item	Approximate Size	Storage Type	Security	Comments
		☐ Uncovered ☐ Covered ☐ Enclosed	☐ Secure ☐ Open	
		☐ Uncovered ☐ Covered ☐ Enclosed	☐ Secure ☐ Open	
		☐ Uncovered ☐ Covered ☐ Enclosed	☐ Secure ☐ Open	
		☐ Uncovered ☐ Covered ☐ Enclosed	☐ Secure ☐ Open	
		☐ Uncovered ☐ Covered ☐ Enclosed	☐ Secure ☐ Open	
		☐ Uncovered ☐ Covered ☐ Enclosed	☐ Secure ☐ Open	
		☐ Uncovered ☐ Covered ☐ Enclosed	☐ Secure ☐ Open	
		☐ Uncovered ☐ Covered ☐ Enclosed	☐ Secure ☐ Open	
		☐ Uncovered ☐ Covered ☐ Enclosed	☐ Secure ☐ Open	
		☐ Uncovered ☐ Covered ☐ Enclosed	☐ Secure ☐ Open	
		☐ Uncovered ☐ Covered ☐ Enclosed	☐ Secure ☐ Open	
		☐ Uncovered ☐ Covered ☐ Enclosed	☐ Secure ☐ Open	
		☐ Uncovered ☐ Covered ☐ Enclosed	☐ Secure ☐ Open	
		☐ Uncovered ☐ Covered ☐ Enclosed	☐ Secure ☐ Open	

DRAFT

Emergency Event Requirements

Living Facilities: Please describe the type of living spaces required to accommodate your department/group for three days after an event. (e.g. bunk areas, kitchen, showers)

Current facility has only a toilet and wash sink. Lunch is eaten at desk.

Emergency Facility Systems: Please describe the type of minimal functions/operations required to accommodate your department/group for three days after an event without outside assistance. (e.g. water storage, radio receiver, fuel)

Other Data and Information

Alternative Fuels: Do you currently have any alternative fueled vehicles? If so, please specify the type of fuel used (Electric, CNG, LNG, propane, etc.). If not, does **Kitsap County**
plan to use this technology in the near future?

Please provide the following information to assist the Planning Team in their programming efforts.

- ✓ As-built floor plans of the current facilities.
- ✓ Site plan or survey of the current site. Please include information on other sites/facilities if they are utilized by **Kitsap County** but not located on the existing site.

Thank you for your time in completing this questionnaire.

Return Questionnaire to Oliver Young at oliver.young@hdrinc.com via email by May 31, 2023.

DRAFT

Kitsap County

Central Kitsap Treatment Plant

Poulsbo, Washington

Name: Rich Neal

Dept.: CK Plant – Operator Workgroup

Phone:

Email: rneal@kitsap.gov

Please provide as much information as possible for each section of this questionnaire. This information will be used in the programming effort for Central Kitsap Treatment Plant Central Kitsap Treatment Plant (CKTP) Maintenance Building. Your Participation is greatly appreciated.

Return Questionnaire to Oliver Young at oliver.young@hdrinc.com via email by May 31, 2023.

General Information

Function: Please describe the primary function and activities of the administrative/office component of your department or group.

Survey submitted for the operator workgroup

Primarily need better storage of polymer totes and other smaller quantities of chemicals. In the future the work group will need expanded office workstations, small parts storage, locker room, and shower facilities.

What is your vision for the project? (Describe your hopes, concerns, and needs)

What is the biggest "pain point(s)" that you are currently experiencing with your facilities or operation?

Deficient storage facilities.

Operation: Please provide security concerns/ requirements, maximum number of simultaneous visitors and frequency of visitors to your department or group, and the necessity for after-hours access to the facility.

Security Issues:

Area is well patrolled by County Sheriff due to fuel station on property. During the weekend and off-hours the facility is not properly secured.

Simultaneous Visitors/Frequency:

DRAFT

Infrequent. Tours to the general public scheduled about 6 times per year.

After hours access? Why?

Access to the plant is required for Sheriff and other County fleet to access fueling stations. Septage receiving is open until 5 pm Mon - Friday.

Staffing

Please provide an organization chart of your department or group (or sketch one on the back of this sheet). The Planning Team wishes to determine existing staffing levels and project for the future. Please list staff in your group or department.

	Position	Staffing Projection [Enter total staff]				Shift Hours			Comments [Please note the beginning and end times for shift(s)]
		Existing	+5 years	+10 years	+20 years				
1	Plant Supervisor	1	1	1	1	☒ Day ☐ GY	☐ Swing ☐ Other	☐ F/T ☐ P/T	
2	Operator(s)	6	7	8	8	☒ Day ☐ GY	☒ Swing ☐ Other	☐ F/T ☐ P/T	
3	MO Worker / Trainee	1	1	1	1	☐ Day ☐ GY	☒ Swing ☐ Other	☐ F/T ☐ P/T	
4						☐ Day ☐ GY	☐ Swing ☐ Other	☐ F/T ☐ P/T	
5						☐ Day ☐ GY	☐ Swing ☐ Other	☐ F/T ☐ P/T	
6						☐ Day ☐ GY	☐ Swing ☐ Other	☐ F/T ☐ P/T	
7						☐ Day ☐ GY	☐ Swing ☐ Other	☐ F/T ☐ P/T	
8						☐ Day ☐ GY	☐ Swing ☐ Other	☐ F/T ☐ P/T	
9						☐ Day ☐ GY	☐ Swing ☐ Other	☐ F/T ☐ P/T	
10						☐ Day ☐ GY	☐ Swing ☐ Other	☐ F/T ☐ P/T	
11						☐ Day ☐ GY	☐ Swing ☐ Other	☐ F/T ☐ P/T	
12						☐ Day ☐ GY	☐ Swing ☐ Other	☐ F/T ☐ P/T	
13						☐ Day ☐ GY	☐ Swing ☐ Other	☐ F/T ☐ P/T	
						☐ Day	☐ Swing	☐ F/T	

DRAFT

	Position	Staffing Projection [Enter total staff]				Shift Hours			Comments [Please note the beginning and end times for shift(s)]
		Existing	+5 years	+10 years	+20 years				
14						☐ GY	☐ Other	☐ P/T	
15						☐ Day ☐ GY	☐ Swing ☐ Other	☐ F/T ☐ P/T	
16						☐ Day ☐ GY	☐ Swing ☐ Other	☐ F/T ☐ P/T	
17						☐ Day ☐ GY	☐ Swing ☐ Other	☐ F/T ☐ P/T	
18						☐ Day ☐ GY	☐ Swing ☐ Other	☐ F/T ☐ P/T	
	Total								

Employee Vehicles and Parking

Please **provide a detailed vehicle inventory** and summarize below, by vehicle type, the vehicles or pieces of equipment used by your department/group. Be prepared to discuss size, quantity, preferred storage method, and growth through the year future.

Vehicle Type	Vehicle Quantities/Projections [Enter total vehicles]				Vehicle Size (Feet) [Enter quantity]					Parking Requirements [Check required]
	Existing	+5 years	+10 years	+20 years	XS 8x10	SM 9x18	MD 10x20	LG 12x30	XL 12x40	
Personal Rigs	*8*	9	10	10						☒ Uncovered ☐ Enclosed ☐ Covered
										☐ Uncovered ☐ Enclosed ☐ Covered
										☐ Uncovered ☐ Enclosed ☐ Covered
										☐ Uncovered ☐ Enclosed ☐ Covered
										☐ Uncovered ☐ Enclosed ☐ Covered
										☐ Uncovered ☐ Enclosed ☐ Covered
										☐ Uncovered ☐ Enclosed ☐ Covered

DRAFT

										☐ Uncovered ☐ Enclosed ☐ Covered
										☐ Uncovered ☐ Enclosed ☐ Covered
										☐ Uncovered ☐ Enclosed ☐ Covered
										☐ Uncovered ☐ Enclosed ☐ Covered
										☐ Uncovered ☐ Enclosed ☐ Covered
										☐ Uncovered ☐ Enclosed ☐ Covered
Total										

Fleet Vehicles Maintained/Parked

Please **provide a detailed vehicle inventory** and summarize below, by vehicle type, the vehicles or pieces of equipment used by your department/group. Be prepared to discuss size, quantity, preferred storage method, and growth through the year future. Please also identify and include all Non-Revenue Vehicles.

Vehicle Type	**Vehicle Quantities/Projections** [Enter total vehicles]				**Vehicle Size (Feet)** [Enter quantity]					**Parking Requirements** [Check required]	
	Existing	**+5 years**	**+10 years**	**+20 years**	**MD 10x20**	**LG 12x30**	**XL 12x40**	**XXL 12x45**	**XXXL 12x60**		
Cushman Cart ☐ Gasoline ☐ Diesel ☐ CNG/LNG ☒ Electric ☐ Other	*1*	1	2	2						☐ Maintained ☐ Parked	☐ Uncovered ☐ Covered ☐ Enclosed
Tractor (Sludge Trailer Jockey Truck) ☐ Gasoline ☐ Diesel ☐ CNG/LNG ☐ Electric ☐ Other	*1*	2	2	2		X				☒ Maintained ☐ Parked	☐ Uncovered ☐ Covered ☐ Enclosed
☐ Gasoline ☐ Diesel ☐ CNG/LNG ☐ Electric ☐ Other										☐ Maintained ☐ Parked	☐ Uncovered ☐ Covered ☐ Enclosed
										☐ Maintained ☐ Parked	☐ Uncovered

DRAFT

Vehicle Type	Vehicle Quantities/Projections [Enter total vehicles]				Vehicle Size (Feet) [Enter quantity]					Parking Requirements [Check required]	
	Existing	+5 years	+10 years	+20 years	MD 10x20	LG 12x30	XL 12x40	XXL 12x45	XXXL 12x60		
☐ Gasoline ☐ Diesel ☐ CNG/LNG ☐ Electric ☐ Other											☐ Covered ☐ Enclosed
☐ Gasoline ☐ Diesel ☐ CNG/LNG ☐ Electric ☐ Other										☐ Maintained ☐ Parked	☐ Uncovered ☐ Covered ☐ Enclosed
☐ Gasoline ☐ Diesel ☐ CNG/LNG ☐ Electric ☐ Other										☐ Maintained ☐ Parked	☐ Uncovered ☐ Covered ☐ Enclosed
☐ Gasoline ☐ Diesel ☐ CNG/LNG ☐ Electric ☐ Other										☐ Maintained ☐ Parked	☐ Uncovered ☐ Covered ☐ Enclosed
☐ Gasoline ☐ Diesel ☐ CNG/LNG ☐ Electric ☐ Other										☐ Maintained ☐ Parked	☐ Uncovered ☐ Covered ☐ Enclosed
☐ Gasoline ☐ Diesel ☐ CNG/LNG ☐ Electric ☐ Other										☐ Maintained ☐ Parked	☐ Uncovered ☐ Covered ☐ Enclosed
☐ Gasoline ☐ Diesel ☐ CNG/LNG ☐ Electric ☐ Other										☐ Maintained ☐ Parked	☐ Uncovered ☐ Covered ☐ Enclosed
☐ Gasoline ☐ Diesel ☐ CNG/LNG ☐ Electric ☐ Other										☐ Maintained ☐ Parked	☐ Uncovered ☐ Covered ☐ Enclosed
☐ Gasoline ☐ Diesel ☐ CNG/LNG ☐ Electric ☐ Other										☐ Maintained ☐ Parked	☐ Uncovered ☐ Covered ☐ Enclosed
☐ Gasoline ☐ Diesel ☐ CNG/LNG ☐ Electric ☐ Other										☐ Maintained ☐ Parked	☐ Uncovered ☐ Covered ☐ Enclosed
☐ Gasoline ☐ Diesel ☐ CNG/LNG ☐ Electric ☐ Other										☐ Maintained ☐ Parked	☐ Uncovered ☐ Covered ☐ Enclosed

DRAFT

Vehicle Type	Vehicle Quantities/Projections [Enter total vehicles]				Vehicle Size (Feet) [Enter quantity]					Parking Requirements [Check required]	
	Existing	+5 years	+10 years	+20 years	MD 10x20	LG 12x30	XL 12x40	XXL 12x45	XXXL 12x60		
☐ Gasoline ☐ Diesel ☐ CNG/LNG ☐ Electric ☐ Other										☐ Maintained ☐ Parked	☐ Uncovered ☐ Covered ☐ Enclosed
☐ Gasoline ☐ Diesel ☐ CNG/LNG ☐ Electric ☐ Other										☐ Maintained ☐ Parked	☐ Uncovered ☐ Covered ☐ Enclosed
☐ Gasoline ☐ Diesel ☐ CNG/LNG ☐ Electric ☐ Other										☐ Maintained ☐ Parked	☐ Uncovered ☐ Covered ☐ Enclosed
Total											

Existing Space

Briefly list all spaces utilized by your department/group and be prepared to discuss your current facilities, where they are located, and any current space inadequacies, etc. **Provide a floor plan or sketch if available.** Describe your existing space and its location (include existing and proposed spaces by function).

Space	Size (L x W)	Function/Inadequacies
Polymer Storage	30x8x10(h)	Polymer totes stored in blower building. No containment. Possibly violates electrical code by blocking access to control cabinets
Spent polymer drums	10x20	Spent polymer 55-gallon drums (and other misc chemicals) stored outside with no cover or containment
Office Space – Control Room upstairs	20x30	Used for SCADA and Centrifuge Monitoring. 2 office desks for shared use.

DRAFT

Space	Size (L x W)	Function/Inadequacies
Office Space – Process Lab	20x20	Lab bench for process / operator performed lab tests. 2 desks for shared use.
Lunchroom	10x10	Space for 4(maximum) with small refrigerator
Bathrooms (2)		Toilet and wash sink only.
Locker room, laundry room and shower	20x20	All located in original Administration Bldg (101). Two showers for all staff located at plant. 1 in Women's restroom and 1 in Men's restroom.

DRAFT

Space	Size (L x W)	Function/Inadequacies

Office Space

Please list any office requirements for your department/group. Please list the title of the office and if it is an open or closed office/workstation. Please briefly describe the filing/furniture needs, function and the amount of time each day spent in the office.

	Space	Approx. Size	Individual filing needs and furniture for the space	Space Adjacency
1	Title/Position: ☐ Office ☐ Workstation ☐ Shared Office		☐ Modular Form ☐ Desk ☐ Credenza ☐ Side Table ☐ Bookcase ☐ Desk Chair	☐ Primary ☐ Secondary

DRAFT

			☐ Side Chair ☐ File Cabinet ☐ Whiteboard	
2	Title/Position: ☐ Office ☐ Workstation ☐ Shared Office		☐ Modular Form ☐ Desk ☐ Credenza ☐ Side Table ☐ Bookcase ☐ Desk Chair ☐ Side Chair ☐ Whiteboard ☐ File Cabinet	☐ Primary ☐ Secondary
3	Title/Position: ☐ Office ☐ Workstation ☐ Shared Office		☐ Modular Form ☐ Desk ☐ Credenza ☐ Side Table ☐ Bookcase ☐ Desk Chair ☐ Side Chair ☐ Whiteboard ☐ File Cabinet	☐ Primary ☐ Secondary
4	Title/Position: ☐ Office ☐ Workstation ☐ Shared Office		☐ Modular Form ☐ Desk ☐ Credenza ☐ Side Table ☐ Bookcase ☐ Desk Chair ☐ Side Chair ☐ Whiteboard ☐ File Cabinet	☐ Primary ☐ Secondary
5	Title/Position: ☐ Office ☐ Workstation ☐ Shared Office		☐ Modular Form ☐ Desk ☐ Credenza ☐ Side Table ☐ Bookcase ☐ Desk Chair ☐ Side Chair ☐ Whiteboard ☐ File Cabinet	☐ Primary ☐ Secondary
6	Title/Position: ☐ Office ☐ Workstation ☐ Shared Office		☐ Modular Form ☐ Desk ☐ Credenza ☐ Side Table ☐ Bookcase ☐ Desk Chair ☐ Side Chair ☐ Whiteboard ☐ File Cabinet	☐ Primary ☐ Secondary
7	Title/Position: ☐ Office ☐ Workstation ☐ Shared Office		☐ Modular Form ☐ Desk ☐ Credenza ☐ Side Table ☐ Bookcase ☐ Desk Chair ☐ Side Chair ☐ Whiteboard ☐ File Cabinet	☐ Primary ☐ Secondary
8	Title/Position: ☐ Office ☐ Workstation ☐ Shared Office		☐ Modular Form ☐ Desk ☐ Credenza ☐ Side Table ☐ Bookcase ☐ Desk Chair ☐ Side Chair ☐ Whiteboard ☐ File Cabinet	☐ Primary ☐ Secondary
9	Title/Position: ☐ Office ☐ Workstation ☐ Shared Office		☐ Modular Form ☐ Desk ☐ Credenza ☐ Side Table ☐ Bookcase ☐ Desk Chair ☐ Side Chair ☐ Whiteboard ☐ File Cabinet	☐ Primary ☐ Secondary
10	Title/Position: ☐ Office ☐ Workstation ☐ Shared Office		☐ Modular Form ☐ Desk ☐ Credenza ☐ Side Table ☐ Bookcase ☐ Desk Chair ☐ Side Chair ☐ Whiteboard ☐ File Cabinet	☐ Primary ☐ Secondary

DRAFT

Shared and Support Spaces

Please list all spaces necessary for your department/group to function effectively and efficiently. Please list **any spaces** you feel are necessary for the effective, efficient function of your administrative department or group in the space provided below. Please provide your initial thoughts on features and furnishing needs for each space.

Shared and Support Space Name	Number of people	Adjacency	Special Features/Furniture/Equipment

DRAFT

Shared and Support Space Name	Number of people	Adjacency	Special Features/Furniture/Equipment

DRAFT

Shop/Work Area Requirements

Please list all shop or work area requirements for your department/group. Please list the title of the space and the relationship/adjacency it may have to other shop spaces. Please briefly describe the equipment needs and any special design features or finishes needed for the shop.

Shop Name	Adjacency	Approx. Size	Specific Equipment Items	Special Features/Finishes

DRAFT

Storage

Please list any special storage requirements for your department/group. Please list types of materials, size of storage requirement, storage type, security requirements, and any special comments that you may have. Include all storage requirements that are currently off-site which you would like to move on-site and any storage on-site that could be stored off-site.

Material/Item	Approximate Size	Storage Type	Security	Comments
		☐ Uncovered ☐ Covered ☐ Enclosed	☐ Secure ☐ Open	
		☐ Uncovered ☐ Covered ☐ Enclosed	☐ Secure ☐ Open	
		☐ Uncovered ☐ Covered ☐ Enclosed	☐ Secure ☐ Open	
		☐ Uncovered ☐ Covered ☐ Enclosed	☐ Secure ☐ Open	
		☐ Uncovered ☐ Covered ☐ Enclosed	☐ Secure ☐ Open	
		☐ Uncovered ☐ Covered ☐ Enclosed	☐ Secure ☐ Open	
		☐ Uncovered ☐ Covered ☐ Enclosed	☐ Secure ☐ Open	
		☐ Uncovered ☐ Covered ☐ Enclosed	☐ Secure ☐ Open	
		☐ Uncovered ☐ Covered ☐ Enclosed	☐ Secure ☐ Open	
		☐ Uncovered ☐ Covered ☐ Enclosed	☐ Secure ☐ Open	
		☐ Uncovered ☐ Covered ☐ Enclosed	☐ Secure ☐ Open	
		☐ Uncovered ☐ Covered ☐ Enclosed	☐ Secure ☐ Open	

DRAFT

Material/Item	Approximate Size	Storage Type	Security	Comments
		☐ Uncovered ☐ Covered ☐ Enclosed	☐ Secure ☐ Open	
		☐ Uncovered ☐ Covered ☐ Enclosed	☐ Secure ☐ Open	
		☐ Uncovered ☐ Covered ☐ Enclosed	☐ Secure ☐ Open	
		☐ Uncovered ☐ Covered ☐ Enclosed	☐ Secure ☐ Open	
		☐ Uncovered ☐ Covered ☐ Enclosed	☐ Secure ☐ Open	
		☐ Uncovered ☐ Covered ☐ Enclosed	☐ Secure ☐ Open	
		☐ Uncovered ☐ Covered ☐ Enclosed	☐ Secure ☐ Open	
		☐ Uncovered ☐ Covered ☐ Enclosed	☐ Secure ☐ Open	
		☐ Uncovered ☐ Covered ☐ Enclosed	☐ Secure ☐ Open	
		☐ Uncovered ☐ Covered ☐ Enclosed	☐ Secure ☐ Open	
		☐ Uncovered ☐ Covered ☐ Enclosed	☐ Secure ☐ Open	
		☐ Uncovered ☐ Covered ☐ Enclosed	☐ Secure ☐ Open	
		☐ Uncovered ☐ Covered ☐ Enclosed	☐ Secure ☐ Open	
		☐ Uncovered ☐ Covered ☐ Enclosed	☐ Secure ☐ Open	

DRAFT

Emergency Event Requirements

Living Facilities: Please describe the type of living spaces required to accommodate your department/group for three days after an event. (e.g. bunk areas, kitchen, showers)

Four foldable cots with sleeping bags. 55-gallon drum of emergency meals for all work groups assigned to Central Kitsap.

Emergency Facility Systems: Please describe the type of minimal functions/operations required to accommodate your department/group for three days after an event without outside assistance. (e.g. water storage, radio receiver, fuel)

Other Data and Information

Alternative Fuels: Do you currently have any alternative fueled vehicles? If so, please specify the type of fuel used (Electric, CNG, LNG, propane, etc.). If not, does **Kitsap County**
plan to use this technology in the near future?

Please provide the following information to assist the Planning Team in their programming efforts.

- ✓ As-built floor plans of the current facilities.
- ✓ Site plan or survey of the current site. Please include information on other sites/facilities if they are utilized by **Kitsap County** but not located on the existing site.

Thank you for your time in completing this questionnaire.

Return Questionnaire to Oliver Young at oliver.young@hdrinc.com via email by May 31, 2023.

DRAFT

Kitsap County

Central Kitsap Treatment Plant

Poulsbo, Washington

Name: Chris Williams

Dept.: CK Plant – Mechanic Workgroup

Phone: 360-731-3000

Email: Cwilliams@kitsap.gov

Please provide as much information as possible for each section of this questionnaire. This information will be used in the programming effort for Central Kitsap Treatment Plant Central Kitsap Treatment Plant (CKTP) Maintenance Building. Your Participation is greatly appreciated.

Return Questionnaire to Oliver Young at oliver.young@hdrinc.com via email by May 31, 2023.

General Information

Function: Please describe the primary function and activities of the administrative/office component of your department or group.

Survey submitted by the Mechanic Workgroup.

=Primary function of this building to provide office, workspace, and storage space for the mechanic crew and equipment.

=Workspace needs of this space will focus on separate workspaces for equipment re-hab, repair, and rebuild as well as fabrication, machining, welding for general maintenance activities as it pertains to the upkeep, repair, and new installation of equipment for four separate treatment plants, 60+ lift stations, and all associated response equipment including portable pumps and generators.

=Current equipment includes CNC plasma table, multiple welding/fabrication equipment, vertical mill, two Lathes, multiple drill-presses,4” pipe threader, bench grinders, media blast cabinet, air compressors, horizontal and vertical bandsaws and worktables for current projects and individual workstations/workbenches for ongoing jobs.

=Current PORTABLE/other equipment includes 4 trailer mounted pumps, light tower, 6 trailer mounted generators, 1 large flatbed trailer, 1 smaller flatbed trailer, scissor lift, forklift.

= vehicles used include 30ton Manitex boom/crane truck, 2 full size service trucks, 1 duty vehicle, 1 pickup truck.

=Office space would need to include individual work stations for each employee to have computer access in order to enter time, complete mandatory training, access and review digital O&M records, as well as create, view, and complete work orders assigned. Additional workstation(s) for guest /common use, meetings, and private office space for supervisors,

=Shared/common spaces to include breakroom, bathrooms, locker room/shower

DRAFT

=Separate access controlled area for storeroom items, consumables, safety equipment, bearings, seals, expensive/fragile equipment needing to be stored in climate controlled and/or dust free environment separate from work space.

What is your vision for the project? (Describe your hopes, concerns, and needs)

I would like to see a structure built that will **safely** and adequately house mechanics and ideally other support groups *(facilities and electricians)* WELL into the future given the equipment, lift station, and potential staffing upgrades planned for the next 15-20 years. Having a shop with more office space to accommodate full staff and increasing crew size, as well as seasonal/summer hires.

Work space that is more open and designed for the equipment we have and use. Equipment is getting larger and often our equipment needs to be moved or repositioned in order to fit repair pieces in. our current overhead monorail limits equipment locations and forklift is very tight to maneuver in shop. *(IE:moving bandsaw to cut material that wont fit due to other equipment in way. Moving parts washer or blast cabinet under crane due to heavy items needing cleaned)* **A bridge style crane is NEEDED** since layout will never be large enough to have forklift access to each machine, and a **larger capacity** as some equipment is heavier than what our current system is rated for. Pumps are getting larger and larger to suit ever expanding flow requirements in the collection system, and as such the newer pumps currently being installed exceed the weight limits of both our shop crane and our vehicle cranes. Large evacuation fans/ventilation systems for cleaning, welding, grinding, and fabrication as much of what we work on is years of corrosion on sewage pumps, welding stainless and aluminum, and other process that cause harmful or toxic dust, fumes, and gasses.

Covered storage space with lighting for portable equipment with hardwired outlets for chargers, block heaters, etc. indoor storage for store-room items/inventory that is lockable, some form of climate control to remove moisture and dust.

An actual breakroom space for food storage/prep *(any dust or debris made in our shop is likely off of sewage treatment or conveyance equipment and we don't want it on our food/drinks)*,

Office space that allows for some physical separation *(Covid distancing requirements made working literally impossible. Having a separate office for each is not feasible but shoulder to shoulder is too close. We will experience similar situations where having additional space will benefit the workplace)*.

locker room WITH shower/laundry *(we work with sewage daily and only have one shower and laundry station in admin building where operations staff locker room is and no additional space is available)*

My biggest concern is that a structure will be built that meets absolute minimum requirements or something will be built in a "we can cut corners to make it work" kind of way. This facility is easily a decade past due, and was re-purposed and re-worked so many times to accommodate changing needs without looking at future needs.. We NEED to build something that will continue working for us in 10-15

DRAFT

years, not just something that will 'get us by' right now. Staff will expand, equipment gets larger and more complex, all while older equipment gets harder to replace and maintain.

What is the biggest "pain point(s)" that you are currently experiencing with your facilities or operation?

Need a larger space to maintain an effective repair shop environment as crew and equipment increase in size and quantity. Current shop cranes are limited capacity and newer large pumps exceed the capacity. Space is limited for when multiple items are being worked on at the same time. Lead times and part availability has equipment being torn down for extended amounts of time, limited shelf space indoors, tight work space for lathe and mill. Current shop does not have potable water (bottle service only for drinking) office space IS breakroom space, meeting space, lunchroom, etc. No AC (mini splits installed in office space recently to alleviate hot temperatures), poor ventilation throughout, heating relies on aging diesel boiler system shared with 3 other buildings and is Inadequate for space, humidity in building and store room area leads to damaged/destroyed items, mold, mildew, etc. leaking roof got patch fixed in multiple spots, new spots show up often. H2S rusts and corrodes everything without good ventilation.

Limited space makes for tight working and poor shop flow. Unsafe conditions. Shop has been re-arranged so many times to accommodate changing needs.

Operation: Please provide security concerns/ requirements, maximum number of simultaneous visitors and frequency of visitors to your department or group, and the necessity for after-hours access to the facility.

Security Issues:

Locking access into buildings either by keycard, physical key, or coded lock. After hours access must be maintained for emergency response to spills or alternate shift work.

Simultaneous Visitors/Frequency:

Typically very few visitors. Occasionally (less than 1per month average) a vendor or contractor may be on site for special project or sales/equipment demo. Most often would be other county employees such as facilities, electricians, or collections crews during regular work hours.

After hours access? Why?

YES. Emergency response/access to tools , response equipment, etc.

DRAFT

Staffing

Please provide an organization chart of your department or group (or sketch one on the back of this sheet). The Planning Team wishes to determine existing staffing levels and project for the future. Please list staff in your group or department.

	Position	Staffing Projection [Enter total staff]				Shift Hours			Comments [Please note the beginning and end times for shift(s)]
		Existing	+5 years	+10 years	+20 years				
1	M&O Supervisor	1	1	1	1	☐ Day ☐ GY	☐ Swing ☐ Other	☐ F/T ☐ P/T	0700-330, M-F
2	M&O Specialist --Mechanics	5	6	7	7	☐ Day ☐ GY	☐ Swing ☐ Other	☐ F/T ☐ P/T	0700-330, M-F
3						☐ Day ☐ GY	☐ Swing ☐ Other	☐ F/T ☐ P/T	
4						☐ Day ☐ GY	☐ Swing ☐ Other	☐ F/T ☐ P/T	
5						☐ Day ☐ GY	☐ Swing ☐ Other	☐ F/T ☐ P/T	
6						☐ Day ☐ GY	☐ Swing ☐ Other	☐ F/T ☐ P/T	
7						☐ Day ☐ GY	☐ Swing ☐ Other	☐ F/T ☐ P/T	
8						☐ Day ☐ GY	☐ Swing ☐ Other	☐ F/T ☐ P/T	
9						☐ Day ☐ GY	☐ Swing ☐ Other	☐ F/T ☐ P/T	
10						☐ Day ☐ GY	☐ Swing ☐ Other	☐ F/T ☐ P/T	
11						☐ Day ☐ GY	☐ Swing ☐ Other	☐ F/T ☐ P/T	
12						☐ Day ☐ GY	☐ Swing ☐ Other	☐ F/T ☐ P/T	
13						☐ Day ☐ GY	☐ Swing ☐ Other	☐ F/T ☐ P/T	
14						☐ Day ☐ GY	☐ Swing ☐ Other	☐ F/T ☐ P/T	
15						☐ Day ☐ GY	☐ Swing ☐ Other	☐ F/T ☐ P/T	
16						☐ Day ☐ GY	☐ Swing ☐ Other	☐ F/T ☐ P/T	
17						☐ Day ☐ GY	☐ Swing ☐ Other	☐ F/T ☐ P/T	
18						☐ Day ☐ GY	☐ Swing ☐ Other	☐ F/T ☐ P/T	
	Total	**6**	**7**	**8**	**8**				

DRAFT

Employee Vehicles and Parking

Please **provide a detailed vehicle inventory** and summarize below, by vehicle type, the vehicles or pieces of equipment used by your department/group. Be prepared to discuss size, quantity, preferred storage method, and growth through the year future.

Vehicle Type	Vehicle Quantities/Projections [Enter total vehicles]				Vehicle Size (Feet) [Enter quantity]					Parking Requirements [Check required]
	Existing	+5 years	+10 years	+20 years	XS 8x10	SM 9x18	MD 10x20	LG 12x30	XL 12x40	
Mechanic crew personal vehicles	6	7	8	8						☒ Uncovered ☐ Enclosed ☐ Covered
										☐ Uncovered ☐ Enclosed ☐ Covered
Additional spot or two if possible for future/guest/visitor, EV, etc		2	2	2						☒ Uncovered ☐ Enclosed ☐ Covered
										☐ Uncovered ☐ Enclosed ☐ Covered
										☐ Uncovered ☐ Enclosed ☐ Covered
										☐ Uncovered ☐ Enclosed ☐ Covered
										☐ Uncovered ☐ Enclosed ☐ Covered
										☐ Uncovered ☐ Enclosed ☐ Covered
										☐ Uncovered ☐ Enclosed ☐ Covered
										☐ Uncovered ☐ Enclosed ☐ Covered
										☐ Uncovered ☐ Enclosed ☐ Covered
										☐ Uncovered ☐ Enclosed ☐ Covered
										☐ Uncovered ☐ Enclosed ☐ Covered
Total	**6**	**9**	**10**	**10**						

DRAFT

Fleet Vehicles Maintained/Parked

Please **provide a detailed vehicle inventory** and summarize below, by vehicle type, the vehicles or pieces of equipment used by your department/group. Be prepared to discuss size, quantity, preferred storage method, and growth through the year future. Please also identify and include all Non-Revenue Vehicles. Equipment duplicated in D Graham MO Supervisor's survey

Vehicle Type	Vehicle Quantities/Projections [Enter total vehicles]				Vehicle Size (Feet) [Enter quantity]					Parking Requirements [Check required]	
	Existing	+5 years	+10 years	+20 years	MD 10x20	LG 12x30	XL 12x40	XXL 12x45	XXXL 12x60		
Chevy Colorado, 4x4, VU#8001 X☐ Gasoline ☐ Diesel ☐ CNG/LNG ☐ Electric ☐ Other	*1*				x					☐ Maintained ☐ Parked	☒ Uncovered ☐ Covered ☐ Enclosed
F-450, 4x4 service body w/crane, VU8402 ☐ Gasoline X☐ Diesel ☐ CNG/LNG ☐ Electric ☐ Other	*1*				x					☐ Maintained ☐ Parked	☐ Uncovered x☒ Covered ☐ Enclosed
F-450, 4x4 service body w/crane, VU834 ☐ Gasoline X☐ Diesel ☐ CNG/LNG ☐ Electric ☐ Other	*1*				x					☐ Maintained ☐ Parked	☐ Uncovered x☒ Covered ☐ Enclosed
F-250, 4x4 service body X☐ Gasoline ☐ Diesel ☐ CNG/LNG ☐ Electric ☐ Other	*1*				x					☐ Maintained ☐ Parked	☐ Uncovered x☒ Covered ☐ Enclosed
Manitex, 30ton boom truck ☐ Gasoline x☐ Diesel ☐ CNG/LNG ☐ Electric ☐ Other	*1*							x		☐ Maintained ☐ Parked	☐ Uncovered ☒ Covered ☐ Enclosed
6" portable trailer mount Pump-Godwin ☐ Gasoline x☐ Diesel ☐ CNG/LNG ☐ Electric ☐ Other	*2*				x					☐ Maintained ☐ Parked	☐ Uncovered Covered ☒ Enclosed
4" portable trailer mount Pump-Godwin ☐ Gasoline x☐ Diesel ☐ CNG/LNG ☐ Electric ☐ Other	*2*				x					☐ Maintained ☐ Parked	☐ Uncovered ☒ Covered ☐ Enclosed

DRAFT

Vehicle Type	Vehicle Quantities/Projections [Enter total vehicles]				Vehicle Size (Feet) [Enter quantity]					Parking Requirements [Check required]	
	Existing	+5 years	+10 years	+20 years	MD 10x20	LG 12x30	XL 12x40	XXL 12x45	XXXL 12x60		
Portable trailer mount light tower/generator ☐ Gasoline x☐ Diesel ☐ CNG/LNG ☐ Electric ☐ Other	*1*				1					☐ Maintained ☐ Parked	☐ Uncovered ☒ Covered ☐ Enclosed
Portable trailer mount generator ☐ Gasoline x☐ Diesel ☐ CNG/LNG ☐ Electric ☐ Other	*6*	1			4		2			☐ Maintained ☐ Parked	☐ Uncovered ☒ Covered ☐ Enclosed
Flat bed trailer ☐ Gasoline ☐ Diesel ☐ CNG/LNG ☐ Electric ☐ Other	*2*	1			2					☐ Maintained ☐ Parked	☒ Uncovered ☐ Covered ☐ Enclosed
Forklift ---- gas/propane ☐ Gasoline ☐ Diesel ☐ CNG/LNG ☐ Electric ☐ Other	*1*				1					☐ Maintained ☐ Parked	☐ Uncovered ☒ Covered ☐ Enclosed
Scissor lift --- electric ☐ Gasoline ☐ Diesel ☐ CNG/LNG ☐ Electric ☐ Other	*1*				1					☐ Maintained ☐ Parked	☐ Uncovered ☐ Covered ☒ Enclosed
F550 Service Truck ☐ Gasoline ☐ Diesel ☐ CNG/LNG ☐ Electric ☐ Other		1	1	1						☐ Maintained ☐ Parked	☐ Uncovered ☐ Covered ☐ Enclosed
☐ Gasoline ☐ Diesel ☐ CNG/LNG ☐ Electric ☐ Other										☐ Maintained ☐ Parked	☐ Uncovered ☐ Covered ☐ Enclosed
☐ Gasoline ☐ Diesel ☐ CNG/LNG ☐ Electric ☐ Other										☐ Maintained ☐ Parked	☐ Uncovered ☐ Covered ☐ Enclosed
☐ Gasoline ☐ Diesel ☐ CNG/LNG ☐ Electric ☐ Other										☐ Maintained ☐ Parked	☐ Uncovered ☐ Covered ☐ Enclosed
☐ Gasoline ☐ Diesel ☐ CNG/LNG ☐ Electric ☐ Other										☐ Maintained ☐ Parked	☐ Uncovered ☐ Covered ☐ Enclosed

DRAFT

Vehicle Type	Vehicle Quantities/Projections [Enter total vehicles]				Vehicle Size (Feet) [Enter quantity]					Parking Requirements [Check required]	
	Existing	+5 years	+10 years	+20 years	MD 10x20	LG 12x30	XL 12x40	XXL 12x45	XXXL 12x60		
Total											

Existing Space

Briefly list all spaces utilized by your department/group and be prepared to discuss your current facilities, where they are located, and any current space inadequacies, etc. **Provide a floor plan or sketch if available.** Describe your existing space and its location (include existing and proposed spaces by function). See floor plan for exact dimensions

Space	Size (L x W)	Function/Inadequacies
Supervisor office	10 x 10	Supervisors office, book/manual library
Shared specialists office	12 x 16	Office space, copier, water cooler (building has no potable water)
General work space	40 x 40	Mill, lathe, drill presses, media cabinet, parts washer, work stations and work tables for rebuids
Metal fabrication	16 x 16	Plasma table, grinders, welders
Upper mezzanine shop area		storage
Upper mezzanine welding area		storage
Vehicle bay, storage		Vehicle parking / storage

DRAFT

Space	Size (L x W)	Function/Inadequacies
Air compressors room		Air compressors (2)
Outside covered/awning. East side of shop		storage
Outside uncovered		As needed,
Electrician storage + mezzanine		Other work group work/storage

DRAFT

Space	Size (L x W)	Function/Inadequacies

Office Space

Please list any office requirements for your department/group. Please list the title of the office and if it is an open or closed office/workstation. Please briefly describe the filing/furniture needs, function and the amount of time each day spent in the office.

	Space	Approx. Size	Individual filing needs and furniture for the space			Space Adjacency
1	Title/Position: Mechanics supervisor x☐ Office ☐ Workstation ☐ Shared Office		☐ Modular Form ☐ Side Table ☐ Side Chair	x☐ Desk x☐ Bookcase x☐ File Cabinet	☐ Credenza ☐ Desk Chair x☐ Whiteboard	☐ Primary ☐ Secondary
2	Title/Position: M&O Specialist ☐ Office x☐ Workstation x ☐ Shared Office		☐ Modular Form ☐ Side Table ☐ Side Chair	☐ Desk ☐ Bookcase ☐ Whiteboard	☐ Credenza ☐ Desk Chair ☐ File Cabinet	☐ Primary ☐ Secondary
3	Title/Position: M&O Specialist ☐ Office x☐ Workstation x ☐ Shared Office		☐ Modular Form ☐ Side Table ☐ Side Chair	☐ Desk ☐ Bookcase ☐ Whiteboard	☐ Credenza ☐ Desk Chair ☐ File Cabinet	☐ Primary ☐ Secondary
4	Title/Position: M&O Specialist		☐ Modular Form	☐ Desk	☐ Credenza	☐ Primary

DRAFT

	☐ Office x☐ Workstation x☐ Shared Office		☐ Side Table ☐ Bookcase ☐ Desk Chair ☐ Side Chair ☐ Whiteboard ☐ File Cabinet	☐ Secondary
5	Title/Position: M&O Specialist ☐ Office x☐ Workstation x ☐ Shared Office		☐ Modular Form ☐ Desk ☐ Credenza ☐ Side Table ☐ Bookcase ☐ Desk Chair ☐ Side Chair ☐ Whiteboard ☐ File Cabinet	☐ Primary ☐ Secondary
6	Title/Position: M&O Specialist ☐ Office x☐ Workstation x☐ Shared Office		☐ Modular Form ☐ Desk ☐ Credenza ☐ Side Table ☐ Bookcase ☐ Desk Chair ☐ Side Chair ☐ Whiteboard ☐ File Cabinet	☐ Primary ☐ Secondary
7	Title/Position: ☐ Office ☐ Workstation ☐ Shared Office		☐ Modular Form ☐ Desk ☐ Credenza ☐ Side Table ☐ Bookcase ☐ Desk Chair ☐ Side Chair ☐ Whiteboard ☐ File Cabinet	☐ Primary ☐ Secondary
8	Title/Position: ☐ Office ☐ Workstation ☐ Shared Office		☐ Modular Form ☐ Desk ☐ Credenza ☐ Side Table ☐ Bookcase ☐ Desk Chair ☐ Side Chair ☐ Whiteboard ☐ File Cabinet	☐ Primary ☐ Secondary
9	Title/Position: ☐ Office ☐ Workstation ☐ Shared Office		☐ Modular Form ☐ Desk ☐ Credenza ☐ Side Table ☐ Bookcase ☐ Desk Chair ☐ Side Chair ☐ Whiteboard ☐ File Cabinet	☐ Primary ☐ Secondary
10	Title/Position: ☐ Office ☐ Workstation ☐ Shared Office		☐ Modular Form ☐ Desk ☐ Credenza ☐ Side Table ☐ Bookcase ☐ Desk Chair ☐ Side Chair ☐ Whiteboard ☐ File Cabinet	☐ Primary ☐ Secondary

DRAFT

Shared and Support Spaces

Please list all spaces necessary for your department/group to function effectively and efficiently. Please list **any spaces** you feel are necessary for the effective, efficient function of your administrative department or group in the space provided below. Please provide your initial thoughts on features and furnishing needs for each space.

Shared and Support Space Name	Number of people	Adjacency	Special Features/Furniture/Equipment

DRAFT

Shared and Support Space Name	Number of people	Adjacency	Special Features/Furniture/Equipment

DRAFT

Shop/Work Area Requirements

Please list all shop or work area requirements for your department/group. Please list the title of the space and the relationship/adjacency it may have to other shop spaces. Please briefly describe the equipment needs and any special design features or finishes needed for the shop.

Shop Name	Adjacency	Approx. Size	Specific Equipment Items	Special Features/Finishes
General workspace			**Steel tables, heavy duty. Large toolboxes, tool storage**	**Ventilation, lighting, power/air line drops** **BRIDGE CRANE ACCESS NEEDED, 2.5 TON MINIMUM based on CURRENT EQUIPMENT SIZE/WEIGHT** **Preferred 5ton to cover ALL future/expected needs (match centrifuge capacity, able to lift and manuever mill/lathes, etc within shop**
Machining/lathe			**Two lathes, vertical mill, drill presses**	**BRIDGE CRANE ACCESS NEEDED, 2.5 TON MINIMUM based on CURRENT EQUIPMENT SIZE/WEIGHT** **Ventilation, lighting, air line drops. Estimated weight of large lathe 5,000-6,000 lbs**

DRAFT

Welding/fabrication			**Welders,plasma cutter, CNC plasma table, grinders, metal bandsaws,**	**BRIDGE CRANE ACCESS NEEDED, 2.5 TON MINIMUM based on CURRENT EQUIPMENT SIZE/WEIGHT** **VERY GOOD VENTILATION, lighting, power / air line drops. Multiple suitable outlets to allow equipment to be re-located if needed for special projects**
Prep/cleaning			**Media blast cabinet, parts washer/ solvent tank**	**BRIDGE CRANE ACCESS NEEDED, 2.5 TON MINIMUM based on CURRENT EQUIPMENT SIZE/WEIGHT** **VERY GOOD VENTILATION, lighting, Air line drops, access to water with floor drain/low wall containment for washdown of equipment prior to rebuild**
Individual workstations			**Workbenches/ tool boxes**	
Consumables storage			**Welding consumables, machining bits and tooling, drill bits, tool consumables**	**Dedicated storage in each work area as needed, keyed locked cabinets/toolboxes**

DRAFT

Ongoing work/project storage			**Storage space. Heavy duty shelving for ongoing in progress jobs**	**Forklift access** **Pallet racking, 3' depth, 10' high, space for carts underneath**
Excess/longterm storage			**Overstock, large critical spares, large valves, piping, etc**	**Forklift access** **Pallet racking, 4' depth, 12' high. Forklift accessible COVERED**
Inventory/store-room			**Bearings, seals, generator and lift station specific spare parts**	**Heavy duty shelving, 2' deep, multiple rows, enough room for cart between**
Used oil/antifreeze and new bulk oil.chemical storage			**Typically 15-20 barrels of various oils, antifreeze, cleaning chemicals, acids, etc**	**Forklift/vehicle access** **Area needs containments, used oil bulk collection with tray for pumping into used bulk tank.**

Storage

Please list any special storage requirements for your department/group. Please list types of materials, size of storage requirement, storage type, security requirements, and any special comments that you may have. Include all storage requirements that are currently off-site which you would like to move on-site and any storage on-site that could be stored off-site.

Material/Item	Approximate Size	Storage Type	Security	Comments
Oil/antifreeze/ chemicals		☐ Uncovered ☐ Covered ☒ Enclosed	☐ Secure ☐ Open	Currently have approx. 10 barrels in a horizontal storage rack and additional 5-10 barrels on containment pallets.

DRAFT

Material/Item	Approximate Size	Storage Type	Security	Comments
				Horizontal storage is not preferred as it is more difficult to handle. We would prefer to have barrels stored UPRIGHT with Pneumatic dispensers for each 'IN USE' barrel. Area needs to be containment for total Qty of barrels stored, accessible by vehicle and forklift. Preferably indoors so that barrels are easier to empty.. MINIMUM is COVERED
Bulk USED oil and Used Antifreeze		☐ Uncovered ☒ Covered ☐ Enclosed	☐ Secure ☐ Open	Currently have outdoor, double wall approx. 1000gal storage for bulk used oil collection. Need facility for dumping/pumping used oil into tank.. Prefer this tank to be covered and on concrete pad to reduce settling , needs to be accessible by Tanker vehicle when tank is emptied. Current no antifreeze collection, Stored in barrels and disposed of individually. 500 gallon max needed.
Steel storage.		☐ Uncovered ☐ Covered ☒ Enclosed	☐ Secure ☐ Open	Most steel can be handled in 10 ft lengths. Anything longer can be purchased specifically for a job. Vertical storage preferred and would reduce footprint. A dedicated ENCLOSED area for bulk steel storage is needed.. vertical uprights, flat sheet goods able to accommodate 4'x10' sheets Smaller rack for remanants. We have a rack used for large /heavy beams and full length 20' sticks approx. 15'L x 10'W x 10'H

DRAFT

Material/Item	Approximate Size	Storage Type	Security	Comments
				that would need to be COVERED and accessible by forklift from BOTH sides.
Portable equipment (pumps/generators, etc)		☐ Uncovered ☒ Covered ☐ Enclosed	☐ Secure ☐ Open	All portable / large equipment is stored under carports, must be shuffled to get some equipment. New space pull in parking so all equipment is accessible, covered, **AND INDIVIDUAL receptacles for battery tenders, block heaters, etc.** Dusk-dawn lighting for safe hookup, security, visibility, etc
Pipe storage		☐ Uncovered ☒ Covered ☐ Enclosed	☐ Secure ☐ Open	COVERED, protected from UV/elements Vertical storage for PVC, copper, abs, DVW piping. Larger diameter heavy wall can be stored on existing steel rack as our stock of this type is generally limited
		☐ Uncovered ☐ Covered ☐ Enclosed	☐ Secure ☐ Open	
OFF-SITE		☐ Uncovered ☒ Covered ☐ Enclosed	☐ Secure ☐ Open	One con-ex storage box containing spare piping from aeration upgrades- covered storage needed

DRAFT

Material/Item	Approximate Size	Storage Type	Security	Comments
Off site		☐ Uncovered ☒ Covered ☐ Enclosed	☐ Secure ☐ Open	Pallet racking including spare parts located in Blower building, approx. 3 sections of racking full. Added to enclosed/covered storeroom area
Store room		☐ Uncovered ☐ Covered ☒ Enclosed	☒ Secure ☐ Open	Currently utilizing approx. 100LF of 3' x 6' x 10' heavy duty racking in approx. 20'x20' space which is packed tightly /double stacked in places ***estimated additional 100LF-140LF of similar shelving in enclosed space would allow to consolidate ALL OTHER Misc. storage items into one central location that could then be access controlled (shelves and cabinets throughout workspace, mezzanine, and outlying storage locations such as blower building, plant wide safety equipment, consumables, etc)***
		☐ Uncovered ☐ Covered ☐ Enclosed	☐ Secure ☐ Open	
		☐ Uncovered ☐ Covered ☐ Enclosed	☐ Secure ☐ Open	
*adding space for facilities office and work/storage space, vehicles		☐ Uncovered ☐ Covered ☐ Enclosed	☐ Secure ☐ Open	Office space for crew plus future hires, pers.vehicles, crew vehicles 4 tankers, riding mowers, landscape equip, etc Work space needed 25x25 approx. for carpentry, basic workspace. Small engines repair/service. Less storage space needed,

DRAFT

Material/Item	Approximate Size	Storage Type	Security	Comments
*adding space for electricians office and work/storage space, vehicles		☐ Uncovered ☐ Covered ☐ Enclosed	☐ Secure ☐ Open	Office space for crew plus future hires, pers.vehicles, crew vehicles Work space needed 25x25 approx. Storage space, enclosed,climate control/heated 25x40approx, vehicle access/roll up door for heavy electrical equipment
*Adding space for storage/containment of bulk operations chemicals like polymer, muratic acid, (Poly totes needs to be moved out of blower building, two pallets of dry chemical in reclaimed water bldg.		☐ Uncovered ☐ Covered ☐ Enclosed	☐ Secure ☐ Open	All chemicals /oil/antifreeze, poly, etc could be stored in ONE location and utilize skirt drain and sump as containment for all items stored in space. Maintain forklift/vehicle access
		☐ Uncovered ☐ Covered ☐ Enclosed	☐ Secure ☐ Open	
		☐ Uncovered ☐ Covered ☐ Enclosed	☐ Secure ☐ Open	
		☐ Uncovered ☐ Covered ☐ Enclosed	☐ Secure ☐ Open	
		☐ Uncovered ☐ Covered ☐ Enclosed	☐ Secure ☐ Open	
		☐ Uncovered ☐ Covered ☐ Enclosed	☐ Secure ☐ Open	
		☐ Uncovered ☐ Covered ☐ Enclosed	☐ Secure ☐ Open	
		☐ Uncovered ☐ Covered ☐ Enclosed	☐ Secure ☐ Open	
		☐ Uncovered ☐ Covered ☐ Enclosed	☐ Secure ☐ Open	

DRAFT

Material/Item	Approximate Size	Storage Type	Security	Comments
		☐ Uncovered ☐ Covered ☐ Enclosed	☐ Secure ☐ Open	
		☐ Uncovered ☐ Covered ☐ Enclosed	☐ Secure ☐ Open	
		☐ Uncovered ☐ Covered ☐ Enclosed	☐ Secure ☐ Open	
		☐ Uncovered ☐ Covered ☐ Enclosed	☐ Secure ☐ Open	

Emergency Event Requirements

Living Facilities: Please describe the type of living spaces required to accommodate your department/group for three days after an event. (e.g. bunk areas, kitchen, showers)

Current setup is plant wide available in limited qty, emergency cots, pads, sleeping bags, MREs.

Emergency Facility Systems: Please describe the type of minimal functions/operations required to accommodate your department/group for three days after an event without outside assistance. (e.g. water storage, radio receiver, fuel)

DRAFT

Other Data and Information

Alternative Fuels: Do you currently have any alternative fueled vehicles? If so, please specify the type of fuel used (Electric, CNG, LNG, propane, etc.). If not, does **Kitsap County**
plan to use this technology in the near future?

Kitsap PW has been shifting some vehicles to electric, unknow what plans are for PW divisions that utilize emergency response and larger specialized equipment

Please provide the following information to assist the Planning Team in their programming efforts.

- ✓ As-built floor plans of the current facilities.
- ✓ Site plan or survey of the current site. Please include information on other sites/facilities if they are utilized by **Kitsap County** but not located on the existing site.

Thank you for your time in completing this questionnaire.

Return Questionnaire to Oliver Young at oliver.young@hdrinc.com via email by May 31, 2023.

DRAFT

Kitsap County

Central Kitsap Treatment Plant

Poulsbo, Washington

Name: Dennis Graham – M&O Supervisor

Dept.: Maintenance Workgroups (Mech, Elect, Facility)

Phone:

Email: dgraham@kitsap.gov

Please provide as much information as possible for each section of this questionnaire. This information will be used in the programming effort for Central Kitsap Treatment Plant Central Kitsap Treatment Plant (CKTP) Maintenance Building. Your Participation is greatly appreciated.

Return Questionnaire to Oliver Young at oliver.young@hdrinc.com via email by May 31, 2023.

General Information

Function: Please describe the primary function and activities of the administrative/office component of your department or group.

Survey submitted by the M&O Supervisor covering all maintenance workgroups excluding operators.

The primary function of the administrative/office houses office staff and a laboratory. There is currently a main building 101 that staffs the Treatment Plant manager, Lab supervisors, an office admin and 4 lab staff. Building 102 is a training and meeting building. No office staff. Building 103 has office staff. M&O supervisor, construction manager, outlying treatment plant supervisor, engineer, and construction manager office assistant. Building 103 has a small conference room. The function is work and office space with printers, scanner, and plotting printer. Building 103A is the I&C and electrician office space. It has 6 employees that occupy the space with a printer/scanner. They do use some space to store parts. This space has one office and 5 workstations. Building 104 is facilities office space. It was a repurposed chlorine building. They do have some shop space and storage for small equipment. There are 6 employees in the building. Building 109 has office space for operators. There are approximately 4 workstations in the building. Building 110 is the mechanics building there is office space for employees. This building has 3 large, covered bays for parking and storage. A machine shop, electrician, and mechanical lockable storage.

What is your vision for the project? (Describe your hopes, concerns, and needs)

My vision of the project is to replace 1970's equipment that is failing to work. Replacing the existing boilers and adding digesters to have the redundancy and ability to do maintenance to existing digesters. To upgrade the mechanics building. The building has h2s damage needs the office space is old and the machine shops were added on, and power is insufficient. Ventilation and heating and cooling need to be

DRAFT

upgraded. Enclosed parking would be a large upgrade. We have bird issues that defecate on equipment, vehicle and stored parts. Also enclosed shop areas would be an upgrade in security.

My concerns are long term contractors taking up valuable parking areas where we store parts and equipment. How much time will crews have to assist contractors in moving things. When construction starts where will the mechanics have to temporarily live. Will they have access to office space to do administrative work, i.e, time card, email, ect.

What is the biggest "pain point(s)" that you are currently experiencing with your facilities or operation?

Old equipment that parts are obsolete. Having all these different buildings that have office space. I don't have a central office space where I have crews separated. That make communication more difficult.

Operation: Please provide security concerns/ requirements, maximum number of simultaneous visitors and frequency of visitors to your department or group, and the necessity for after-hours access to the facility.

Security Issues:

open shops where vehicles are undercover but not fully enclosed. Anyone can drive in our facilities during business hours. There is no check in or locked gate. People who do come to the facility has no idea where to go to ask questions or ask for assistance. Sometime people just wander around looking lost. We have just added security cameras. After hours access to the treatment plant would have to be planed. The main gate is shut after 5pm.

Simultaneous Visitors/Frequency: during construction quite frequent. Daily. We also have a septage receiving area. Contractors dump septage daily Monday thru Friday.

After hours access? Why? No necessary. Would be a planed event.

DRAFT

Staffing

Please provide an organization chart of your department or group (or sketch one on the back of this sheet). The Planning Team wishes to determine existing staffing levels and project for the future. Please list staff in your group or department.

	Position	Staffing Projection [Enter total staff]				Shift Hours			Comments [Please note the beginning and end times for shift(s)]
		Existing	+5 years	+10 years	+20 years				
1	O&M supervisor	1	1	1	1	x☐ Day ☐ GY	☐ Swing ☐ Other	x☐ F/T ☐ P/T	7 to 330 M-F
2	Facility Foreman (crew supervisor)	1	1	1	1	x☐ Day ☐ GY	☐ Swing ☐ Other	x☐ F/T ☐ P/T	7 to 330 M-F
3	Mechanic Foreman (crew supervisor)	1	1	1	1	x☐ Day ☐ GY	☐ Swing ☐ Other	x☐ F/T ☐ P/T	7 to 330 M-F
4	Electrician Foreman (supervisor)	1	1	1	1	x☐ Day ☐ GY	☐ Swing ☐ Other	x ☐ P/T	7 to 330 M-F
5	O&M mechanics (mechanics workgroup)	5	5	6	7	☐ Day ☐ GY	☐ Swing ☐ Other	☐ F/T ☐ P/T	7 to 330 M-F
6	O&M Facilities / Pump Stations	5	5	6	7	☐ Day ☐ GY	☐ Swing ☐ Other	☐ F/T ☐ P/T	7 to 330 M-F
7	I&C specialists	3	4	4	4	☐ Day ☐ GY	☐ Swing ☐ Other	☐ F/T ☐ P/T	7 to 330 M-F
8	Electrician	2	3	4	4	☐ Day ☐ GY	☐ Swing ☐ Other	☐ F/T ☐ P/T	7 to 330 M-F
9						☐ Day ☐ GY	☐ Swing ☐ Other	☐ F/T ☐ P/T	
10						☐ Day ☐ GY	☐ Swing ☐ Other	☐ F/T ☐ P/T	
11						☐ Day ☐ GY	☐ Swing ☐ Other	☐ F/T ☐ P/T	
12						☐ Day ☐ GY	☐ Swing ☐ Other	☐ F/T ☐ P/T	
13						☐ Day ☐ GY	☐ Swing ☐ Other	☐ F/T ☐ P/T	
14						☐ Day ☐ GY	☐ Swing ☐ Other	☐ F/T ☐ P/T	
15						☐ Day ☐ GY	☐ Swing ☐ Other	☐ F/T ☐ P/T	
16						☐ Day ☐ GY	☐ Swing ☐ Other	☐ F/T ☐ P/T	
17						☐ Day ☐ GY	☐ Swing ☐ Other	☐ F/T ☐ P/T	
18						☐ Day ☐ GY	☐ Swing ☐ Other	☐ F/T ☐ P/T	
	Total	**19**	**21**	**24**	**26**				

DRAFT

Employee Vehicles and Parking

Please **provide a detailed vehicle inventory** and summarize below, by vehicle type, the vehicles or pieces of equipment used by your department/group. Be prepared to discuss size, quantity, preferred storage method, and growth through the year future.

Vehicle Type	Vehicle Quantities/Projections [Enter total vehicles]				Vehicle Size (Feet) [Enter quantity]					Parking Requirements [Check required]
	Existing	+5 years	+10 years	+20 years	XS 8x10	SM 9x18	MD 10x20	LG 12x30	XL 12x40	
Car and trucks	*19*					19				x☐ Uncovered ☐ Enclosed ☐ Covered
										☐ Uncovered x☐ Enclosed ☐ Covered
										☐ Uncovered x☐ Enclosed ☐ Covered
										☐ Uncovered ☐ Enclosed ☐ Covered
										☐ Uncovered ☐ Enclosed ☐ Covered
										☐ Uncovered x☐ Enclosed ☐ Covered
										☐ Uncovered x☐ Enclosed ☐ Covered
										☐ Uncovered ☐ Enclosed ☐ Covered
										☐ Uncovered ☐ Enclosed ☐ Covered
										☐ Uncovered x☐ Enclosed ☐ Covered
										☐ Uncovered x☐ Enclosed ☐ Covered
										☐ Uncovered ☐ Enclosed ☐ Covered
										☐ Uncovered ☐ Enclosed ☐ Covered
Total										

DRAFT

Fleet Vehicles Maintained/Parked

Please **provide a detailed vehicle inventory** and summarize below, by vehicle type, the vehicles or pieces of equipment used by your department/group. Be prepared to discuss size, quantity, preferred storage method, and growth through the year future. Please also identify and include all Non-Revenue Vehicles.

Vehicle Type	Vehicle Quantities/Projections [Enter total vehicles]				Vehicle Size (Feet) [Enter quantity]					Parking Requirements [Check required]	
	Existing	+5 years	+10 years	+20 years	MD 10x20	LG 12x30	XL 12x40	XXL 12x45	XXXL 12x60		
Prime pump ☐ Gasoline x☐ Diesel ☐ CNG/LNG ☐ Electric ☐ Other	*4*					2	2			☐ Maintained x☐ Parked	☐ Uncovered x☐ Covered xx☐ Enclosed
generator ☐ Gasoline x☐ Diesel ☐ CNG/LNG ☐ Electric ☐ Other	*4*					3		1		☐ Maintained ☐ Parked	x☐ Uncovered x☐ Covered xx1☐ Enclosed
Man lift truck ☐ Gasoline x☐ Diesel ☐ CNG/LNG ☐ Electric ☐ Other	*1*							1		☐ Maintained ☐ Parked	☐ Uncovered ☐ Covered ☐ Enclosed
Boom truck ☐ Gasoline x☐ Diesel ☐ CNG/LNG ☐ Electric ☐ Other	*1*								1	☐ Maintained ☐ Parked	☐ Uncovered x☐ Covered ☐ Enclosed
tanker ☐ Gasoline ☐x Diesel ☐ CNG/LNG ☐ Electric ☐ Other	*4*									☐ Maintained ☐ Parked	☐ Uncovered x☐ Covered xx☐ Enclosed
¾ truck x☐ Gasoline ☐ Diesel ☐ CNG/LNG ☐ Electric ☐ Other	*3*					3				☐ Maintained ☐ Parked	☐ Uncovered x☐ Covered ☐ Enclosed
½ truck ☐ Gasoline ☐ Diesel ☐ CNG/LNG ☐ Electric ☐ Other	*3*					3				☐ Maintained ☐ Parked	☐ Uncovered ☐ Covered ☐ Enclosed

DRAFT

Vehicle Type	Vehicle Quantities/Projections [Enter total vehicles]				Vehicle Size (Feet) [Enter quantity]					Parking Requirements [Check required]	
	Existing	+5 years	+10 years	+20 years	MD 10x20	LG 12x30	XL 12x40	XXL 12x45	XXXL 12x60		
¼ truck x☐ Gasoline ☐ Diesel ☐ CNG/LNG ☐ Electric ☐ Other	*3*				3					☐ Maintained ☐ Parked	☐ Uncovered x☐ Covered ☐ Enclosed
Service truck x☐ Gasoline ☐ Diesel ☐ CNG/LNG ☐ Electric ☐ Other	*3*				3					☐ Maintained ☐ Parked	☐ Uncovered x☐ Covered xx☐ Enclosed
van ☐ Gasoline ☐ Diesel ☐ CNG/LNG ☐ Electric ☐ Other	*2*				2					☐ Maintained ☐ Parked	☐ Uncovered x☐ Covered xx☐ Enclosed
suv ☐ Gasoline ☐ Diesel ☐ CNG/LNG ☐ Electric ☐ Other	*1*									☐ Maintained ☐ Parked	x☐ Uncovered ☐ Covered ☐ Enclosed
F550 Service Truck with Hoist ☐ Gasoline ☐ Diesel ☐ CNG/LNG ☐ Electric ☐ Other		1								☐ Maintained ☐ Parked	☐ Uncovered ☐ Covered ☒ Enclosed
☐ Gasoline ☐ Diesel ☐ CNG/LNG ☐ Electric ☐ Other										☐ Maintained ☐ Parked	☐ Uncovered ☐ Covered ☐ Enclosed
☐ Gasoline ☐ Diesel ☐ CNG/LNG ☐ Electric ☐ Other										☐ Maintained ☐ Parked	☐ Uncovered ☐ Covered ☐ Enclosed
☐ Gasoline ☐ Diesel ☐ CNG/LNG ☐ Electric ☐ Other										☐ Maintained ☐ Parked	☐ Uncovered ☐ Covered ☐ Enclosed
☐ Gasoline ☐ Diesel ☐ CNG/LNG ☐ Electric ☐ Other										☐ Maintained ☐ Parked	☐ Uncovered ☐ Covered ☐ Enclosed
☐ Gasoline ☐ Diesel ☐ CNG/LNG ☐ Electric ☐ Other										☐ Maintained ☐ Parked	☐ Uncovered ☐ Covered ☐ Enclosed

DRAFT

Vehicle Type	Vehicle Quantities/Projections [Enter total vehicles]				Vehicle Size (Feet) [Enter quantity]					Parking Requirements [Check required]	
	Existing	+5 years	+10 years	+20 years	MD 10x20	LG 12x30	XL 12x40	XXL 12x45	XXXL 12x60		
Total											

Existing Space

Briefly list all spaces utilized by your department/group and be prepared to discuss your current facilities, where they are located, and any current space inadequacies, etc. **Provide a floor plan or sketch if available.** Describe your existing space and its location (include existing and proposed spaces by function).

Space	Size (L x W)	Function/Inadequacies
101		Admin building. Lab and office space, locker room. Plant manager, office assistant 5 lab employees Heat and A/C leaking roof.
102	24X60	Training room. new
103	36X60	Office space conference room. M&O supervisor, construction manager, office assistant, engineer. Outlying plant supervisor. New
103A	24x36	Office space electricians and I&C new. Isolation from other crews.
104		Facilities office. 6 employees. Old chlorine building. Heat and A/C lack of work space. Isolation from other crews. This building could be repurposed. It has large hoist and covered space. SCADA access, internet access heat, AC, and ventilation
105		Sandfilter building

DRAFT

Space	Size (L x W)	Function/Inadequacies
106		Blower building
107		
108		
109		Process building operators office Lack of work space. Old technology. Corrosion damage
110		Mechanics building 6 mechanics office. Lack of space and work stations. Worker made not professional. Lack of ventilation lack of head and Ac. Lack of power supply. H2S damage. Leaking roof. SCADA access, internet access
111		Head works

DRAFT

Space	Size (L x W)	Function/Inadequacies

Office Space

Please list any office requirements for your department/group. Please list the title of the office and if it is an open or closed office/workstation. Please briefly describe the filing/furniture needs, function and the amount of time each day spent in the office.

	Space	Approx. Size	Individual filing needs and furniture for the space	Space Adjacency
1	Title/Position: M&O supervisor x☐ Office ☐ Workstation ☐ Shared Office	10X10	x☐ Modular Form ☐ Desk ☐ Credenza ☐ Side Table ☐ Bookcase ☐ Desk Chair x☐ Side Chair x☐ File Cabinet x☐ Whiteboard	☐ Primary ☐ Secondary
2	Title/Position: Facilities supervisor x☐ Office ☐ Workstation ☐ Shared Office	10X10	☐ Modular Form x☐ Desk ☐ Credenza ☐ Side Table x☐ Bookcase x☐ Desk Chair ☐ Side Chair x☐ Whiteboard x☐ File Cabinet	☐ Primary ☐ Secondary
3	Title/Position: Electrician supervisor	10X10	☐ Modular Form x☐ Desk ☐ Credenza	☐ Primary

DRAFT

	x☐ Office ☐ Workstation ☐ Shared Office		☐ Side Table x☐ Bookcase x☐ Desk Chair ☐ Side Chair x☐ Whiteboard ☐ File Cabinet	☐ Secondary
4	Title/Position: Mechanic supervisor x☐ Office ☐ Workstation ☐ Shared Office		☐ Modular Form x☐ Desk ☐ Credenza ☐ Side Table x☐ Bookcase x☐ Desk Chair ☐ Side Chair x☐ Whiteboard x☐ File Cabinet	☐ Primary ☐ Secondary
5	Title/Position: I&C specialists 3 ☐ Office x☐ Workstation ☐ Shared Office		☐ Modular Form x☐ Desk ☐ Credenza ☐ Side Table x☐ Bookcase x☐ Desk Chair ☐ Side Chair ☐ Whiteboard ☐ File Cabinet	☐ Primary ☐ Secondary
6	Title/Position: electricians 2 ☐ Office x☐ Workstation ☐ Shared Office		☐ Modular Form x☐ Desk ☐ Credenza ☐ Side Table x☐ Bookcase x☐ Desk Chair ☐ Side Chair ☐ Whiteboard ☐ File Cabinet	☐ Primary ☐ Secondary
7	Title/Position: facilities specialist 5 ☐ Office x☐ Workstation ☐ Shared Office		☐ Modular Form x☐ Desk ☐ Credenza ☐ Side Table x☐ Bookcase x☐ Desk Chair ☐ Side Chair ☐ Whiteboard x☐ File Cabinet	☐ Primary ☐ Secondary
8	Title/Position: mechanic specialists 5 ☐ Office x☐ Workstation ☐ Shared Office		☐ Modular Form x☐ Desk ☐ Credenza ☐ Side Table x☐ Bookcase x☐ Desk Chair ☐ Side Chair ☐ Whiteboard x☐ File Cabinet	☐ Primary ☐ Secondary
9	Title/Position: ☐ Office ☐ Workstation ☐ Shared Office		☐ Modular Form ☐ Desk ☐ Credenza ☐ Side Table ☐ Bookcase ☐ Desk Chair ☐ Side Chair ☐ Whiteboard ☐ File Cabinet	☐ Primary ☐ Secondary
10	Title/Position: ☐ Office ☐ Workstation ☐ Shared Office		☐ Modular Form ☐ Desk ☐ Credenza ☐ Side Table ☐ Bookcase ☐ Desk Chair ☐ Side Chair ☐ Whiteboard ☐ File Cabinet	☐ Primary ☐ Secondary

DRAFT

Shared and Support Spaces

Please list all spaces necessary for your department/group to function effectively and efficiently. Please list **any spaces** you feel are necessary for the effective, efficient function of your administrative department or group in the space provided below. Please provide your initial thoughts on features and furnishing needs for each space.

Shared and Support Space Name	Number of people	Adjacency	Special Features/Furniture/Equipment

DRAFT

Shared and Support Space Name	Number of people	Adjacency	Special Features/Furniture/Equipment

DRAFT

Shop/Work Area Requirements

Please list all shop or work area requirements for your department/group. Please list the title of the space and the relationship/adjacency it may have to other shop spaces. Please briefly describe the equipment needs and any special design features or finishes needed for the shop.

Shop Name	Adjacency	Approx. Size	Specific Equipment Items	Special Features/Finishes
Mechanics shop				

DRAFT

Storage

Please list any special storage requirements for your department/group. Please list types of materials, size of storage requirement, storage type, security requirements, and any special comments that you may have. Include all storage requirements that are currently off-site which you would like to move on-site and any storage on-site that could be stored off-site.

Material/Item	Approximate Size	Storage Type	Security	Comments
		☐ Uncovered ☐ Covered ☐ Enclosed	☐ Secure ☐ Open	
		☐ Uncovered ☐ Covered ☐ Enclosed	☐ Secure ☐ Open	
		☐ Uncovered ☐ Covered ☐ Enclosed	☐ Secure ☐ Open	
		☐ Uncovered ☐ Covered ☐ Enclosed	☐ Secure ☐ Open	
		☐ Uncovered ☐ Covered ☐ Enclosed	☐ Secure ☐ Open	
		☐ Uncovered ☐ Covered ☐ Enclosed	☐ Secure ☐ Open	
		☐ Uncovered ☐ Covered ☐ Enclosed	☐ Secure ☐ Open	
		☐ Uncovered ☐ Covered ☐ Enclosed	☐ Secure ☐ Open	
		☐ Uncovered ☐ Covered ☐ Enclosed	☐ Secure ☐ Open	
		☐ Uncovered ☐ Covered ☐ Enclosed	☐ Secure ☐ Open	
		☐ Uncovered ☐ Covered ☐ Enclosed	☐ Secure ☐ Open	
		☐ Uncovered ☐ Covered ☐ Enclosed	☐ Secure ☐ Open	

DRAFT

Material/Item	Approximate Size	Storage Type	Security	Comments
		☐ Uncovered ☐ Covered ☐ Enclosed	☐ Secure ☐ Open	
		☐ Uncovered ☐ Covered ☐ Enclosed	☐ Secure ☐ Open	
		☐ Uncovered ☐ Covered ☐ Enclosed	☐ Secure ☐ Open	
		☐ Uncovered ☐ Covered ☐ Enclosed	☐ Secure ☐ Open	
		☐ Uncovered ☐ Covered ☐ Enclosed	☐ Secure ☐ Open	
		☐ Uncovered ☐ Covered ☐ Enclosed	☐ Secure ☐ Open	
		☐ Uncovered ☐ Covered ☐ Enclosed	☐ Secure ☐ Open	
		☐ Uncovered ☐ Covered ☐ Enclosed	☐ Secure ☐ Open	
		☐ Uncovered ☐ Covered ☐ Enclosed	☐ Secure ☐ Open	
		☐ Uncovered ☐ Covered ☐ Enclosed	☐ Secure ☐ Open	
		☐ Uncovered ☐ Covered ☐ Enclosed	☐ Secure ☐ Open	
		☐ Uncovered ☐ Covered ☐ Enclosed	☐ Secure ☐ Open	
		☐ Uncovered ☐ Covered ☐ Enclosed	☐ Secure ☐ Open	
		☐ Uncovered ☐ Covered ☐ Enclosed	☐ Secure ☐ Open	

DRAFT

Emergency Event Requirements

Living Facilities: Please describe the type of living spaces required to accommodate your department/group for three days after an event. (e.g. bunk areas, kitchen, showers)

Emergency Facility Systems: Please describe the type of minimal functions/operations required to accommodate your department/group for three days after an event without outside assistance. (e.g. water storage, radio receiver, fuel)

Other Data and Information

Alternative Fuels: Do you currently have any alternative fueled vehicles? If so, please specify the type of fuel used (Electric, CNG, LNG, propane, etc.). If not, does **Kitsap County**
plan to use this technology in the near future?

Please provide the following information to assist the Planning Team in their programming efforts.

- ✓ As-built floor plans of the current facilities.
- ✓ Site plan or survey of the current site. Please include information on other sites/facilities if they are utilized by **Kitsap County** but not located on the existing site.

Thank you for your time in completing this questionnaire.

Return Questionnaire to Oliver Young at oliver.young@hdrinc.com via email by May 31, 2023.

DRAFT

C

Appendix C. Meeting Agendas and Sign-in Sheets

DRAFT

DRAFT

Agenda

Project:	Kitsap CKTP Haul Waste Upgrades
Subject:	Workshop 2 - Maintenance Building Tour & Programming Interviews
Date:	Wednesday, June 28, 2023
Location:	CKTP Training Room Bldg. 102

Attendees:	Andrew Staples (HDR)	Floyd Bayless (Kitsap)
	Jeffrey D. Zahller (HDR)	Ken Young (Kitsap)
	Laura Nolan (HDR)	Matthew Pickering (Kitsap)
	Oliver Goulart Young (HDR)	Nick Martin (Kitsap)
	Claudia Gonzalez (HDR)	Randall Bolton (Kitsap)
	Barbara Zaroff (Kitsap)	Rick Neal (Kitsap)
	Christopher Sheridan (Kitsap)	Stella Vakarcs (Kitsap)
	Dennis Graham (Kitsap)	

Schedule:	8:00 am – 8:30 am	Meeting Goals / Introduction
	8:30 am – 9:30 am	Maintenance Building Department Tour
	9:30 pm – 11:30 pm	Programming Interviews: Maintenance Workgroups (Mech, Elect, Facility)
	11:30 pm – 12:30 pm	Lunch / Open Discussions
	12:30 pm – 1:30 pm	Programming Interview: Operator Workgroup / Maintenance Workgroups Recap
	1:30 pm – 2:00 pm	Recap / Next Steps

DRAFT

Meeting Attendance

Project: Kitsap CKTP Haul Waste Upgrades

Subject: Workshop 2 – Maintenance Building Tour & Programming Interviews

Date: Wednesday, June 28, 2023

Location: CKTP Training Room Bldg. 102 - 12351 Brownsville Hwy NE, Poulsbo, WA

Attendee	E-Mail	Organization
OLIVER GOULART YOUNG	oliver.young@hdrinc.com	HDR
Rich Stuart	RSTUART@Kitsap.gov	KCPW
FLOYD BAYLESS	FLOYDBAY@COMCAST.NET	
Andrew Stgokes	—	HDR
Randy Bolton	Rbolton@Kitsap.gov	KCPW
Dennis Graham	dgraham@Kitsap.gov	KCPW
Matt Pickering	mpickering@kitsap.gov	KCPW
John Yates	Jyates@kitsap.gov	KCPW
Zack Knight	zknight@ "	KCPW
Richard Neal	rneal@Kitsap.gov	KCPW

DRAFT

Agenda

Project:	Kitsap CKTP Solids and Liquid Hauled Waste Upgrades
Subject:	Workshop 5 – Maintenance Building Design Charrette
Date:	Wednesday, August 09, 2023
Location:	CKTP Training Room Bldg. 102

Attendees:

Andrew Staples (HDR)	Floyd Bayless (Kitsap)
Jeffrey D. Zahller (HDR)	Ken Young (Kitsap)
Laura Nolan (HDR)	Matthew Pickering (Kitsap)
Oliver Goulart Young (HDR)	Nick Martin (Kitsap)
Claudia Gonzalez (HDR)	Randall Bolton (Kitsap)
Barbara Zaroff (Kitsap)	Rick Neal (Kitsap)
Christopher Sheridan (Kitsap)	Stella Vakarcs (Kitsap)
Dennis Graham (Kitsap)	

Schedule:

July 31 – August 4: Development of Preliminary "Hot Start" Maintenance Building&Yard Concepts

August 9

8:00 am – 8:15 am	Introduction	Planning Team & Stakeholders
8:15 am – 9:15 am	"Hot Start" Concepts Presentation	Planning Team & Stakeholders
9:15am – 12:00 pm	Collaborative Design Workshop	Planning Team
12:00 pm – 1:00 pm	Working Lunch	
1:00 pm – 2:00 pm	Collaborative Design Workshop	Planning Team
2:00 pm – 3:00 pm	Concept Presentation/Next Steps	Planning Team & Stakeholders
3:00 pm – 5:00 pm	Collaborative Design Workshop	Planning Team

August 14 – 16: Final Maintenance Building&Yard Concept development based on stakeholder feedback.

DRAFT

Meeting Attendance

Project: Kitsap CKTP Haul Waste Upgrades

Subject: Workshop 5 – Maintenance Building and Site Master Plan Charrette

Date: Wednesday, August 09, 2023

Location: CKTP Training Room Bldg. 102

Attendee	Organization
Nick Martin CM	Kitsap
Chris Sheridan	Kitsap
FLOYD BARLESS	KCSO
Dennis Graham	KCPW Sewer
John Yates	Kitsap
Zack Knight	Kitsap
KEN YOUNG	KITSAP
Matt Pickering	Kitsap
Randy Bolton	Kitsap
Claudia Gonzalez	HDR
Andrew Staples	HDR
OLIVER YOUNG	HDR

DRAFT

D

Appendix D. Existing Site and Facility Plans

DRAFT

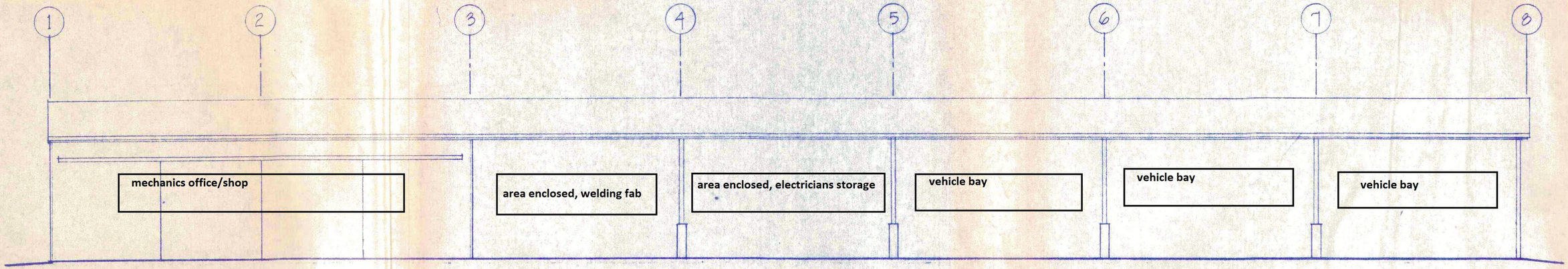

A FRONT ELEVATION
1/8" = 1'0"

walls/doors, ground level
added mezannine level
storage shelves,racking, cabinets, toolboxes
equipment
oil storage

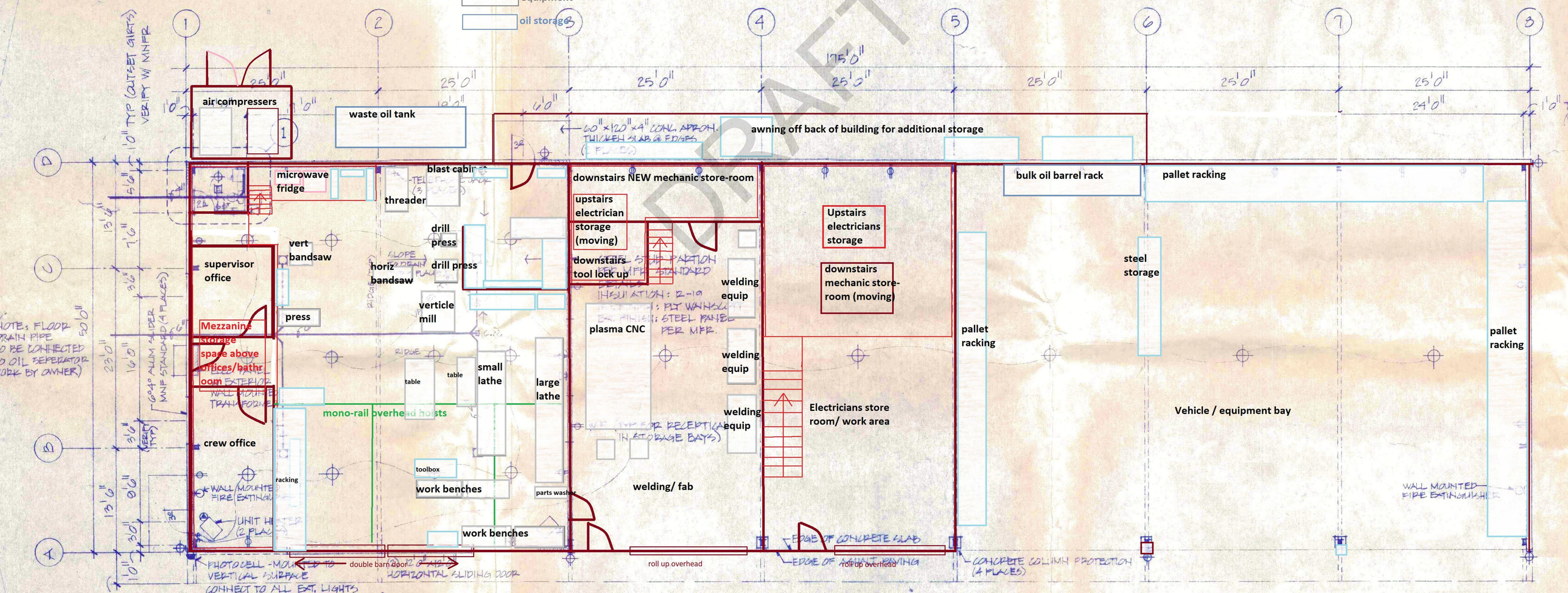

Figure 7. Site Layout of Alternative 1

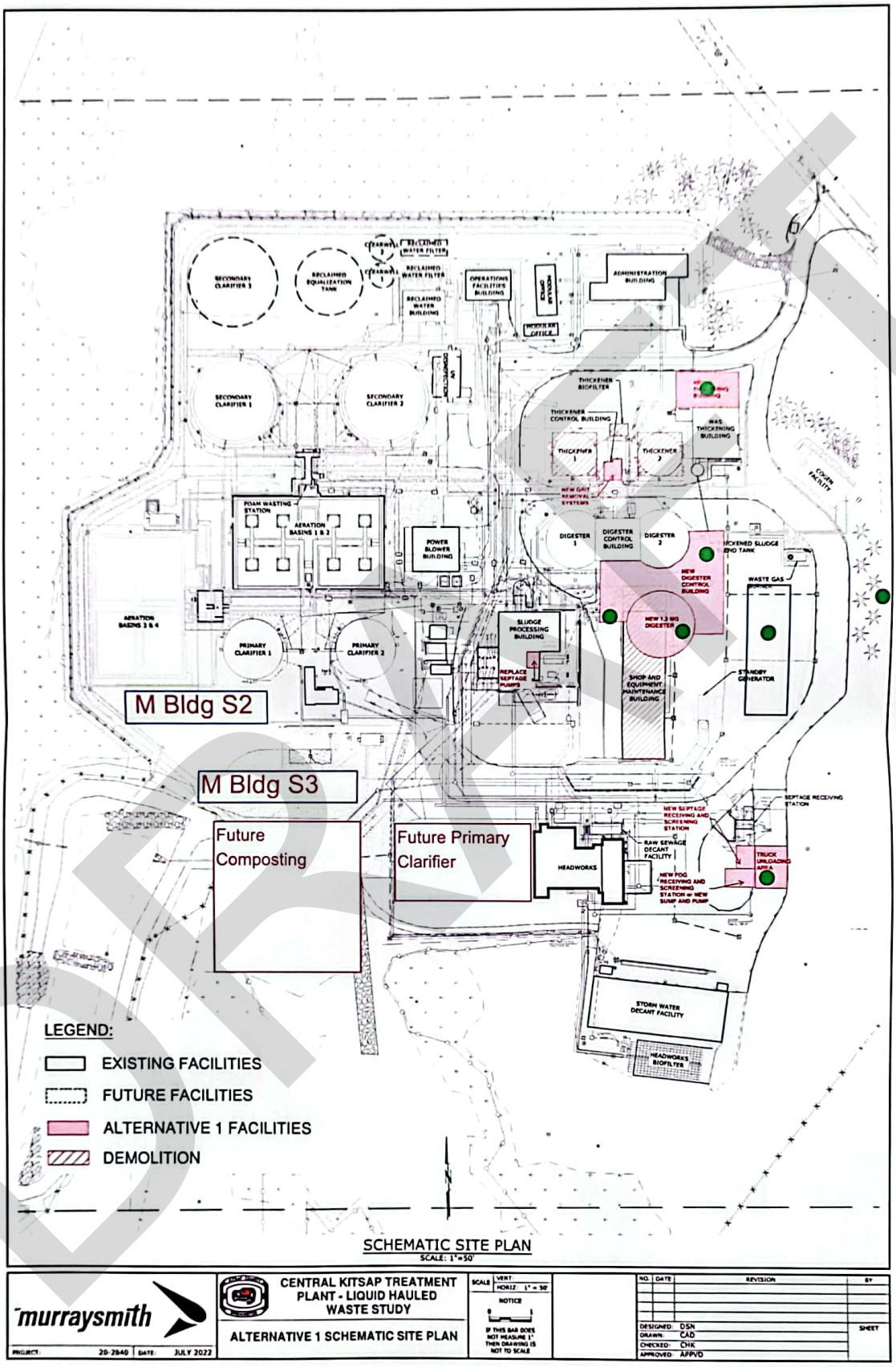

DRAFT

DRAFT

Appendix E. Sludge-Thickening Field Test Results

FKC CO., LTD.

2708 West 18th Street
Port Angeles, WA 98363

(360) 452-9472
FAX (360) 452-6880

August 30, 2023

Jeffrey Zahler, P.E.
HDR Inc.
Bellevue, WA

Re: Central Kitsap Laboratory Test Results

Dear Mr. Zahler:

Attached are the results of the three samples we tested on four separate intervals. The summary of the results are as follows:

	Waste Activated Sludge			
	8/14/23	**8/18/23**	**8/22/23**	**8/24/23**
I. Inlet conditions				
Inlet consistency (TS):	0.35%	0.47%	0.39%	0.43%
Color:	Lt. Brown	Lt. Brown	Lt. Brown	Lt. Brown
Ash:	22.1%	24.6%	27.3%	24.2%
Fiber content (150 mesh):	None	None	None	None
II. Conditioning requirements				
Polymer required:	Yes	Yes	Yes	Yes
Polymer used:	SNF - 6266	SNF - 6266	SNF - 6266	SNF - 6266
Polymer dosage:	18 lb./DT Active	15 lb./DT Active	16 lb./DT Active	14 lb./DT Active
Floc size/strength:	Good	Good	Good	Good
III. Dewatering tests				
RST Simulation:	3.75 %	4.34%	4.57%	3.53%

	Primary Sludge			
	8/14/23	**8/18/23**	**8/22/23**	**8/24/23**
I. Inlet conditions				
Inlet consistency (TS):	0.37%	0.77%	1.98%	1.55%
Color:	Very Lt. Brown	Very Lt. Brown	Very Lt. Brown	Very Lt. Brown
Ash:	14.8%	11.5%	11.14%	13.7%
Fiber content (150 mesh):	25.5%	53.7%	44.3%	53.3%
II. Conditioning requirements				
Polymer required:	Yes	Yes	Yes	Yes
Polymer used:	SNF - 6266	SNF - 6266	SNF - 6266	SNF - 6266
Polymer dosage:	11 lb./DT Active	11 lb./DT Active	13 lb./DT Active	5 lb./DT Active
Floc size/strength:	Good	Good	Good	Good
III. Dewatering tests				
RST Simulation:	6.05 %	6.43%	7.42%	6.33%

	Septage Sludge			
	8/14/23	**8/18/23**	**8/22/23**	**8/24/23**
I. Inlet conditions				
Inlet consistency (TS):	0.23%	0.59%	0.22%	0.18%
Color:	Lt. Green	Black	Black	Dark Brown / Black
Ash:	32.8%	25.4%	36.2%	33.9%
Fiber content (150 mesh):	0.09%	18.8%	20.6%	5.68%
II. Conditioning requirements				
Polymer required:	Yes	Yes	Yes	Yes
Polymer used:	SNF - 9530	SNF - 6266	SNF - 6266	SNF - 6266
Polymer dosage:	18 lb./DT Active	21 lb./DT Active	18 lb./DT Active	23 lb./DT Active
Floc size/strength:	Good	Good	Good	Good
III. Dewatering tests				
RST Simulation:	7.08 %	7.62%	6.72%	6.39%

	75% Septage / 25% Primary Mix, By Volume			
	8/14/23	**8/18/23**	**8/22/23**	**8/24/23**
I. Inlet conditions				
Inlet consistency (TS):	0.30%	0.69%	0.61%	0.35%
Color:	Brown	Dark Brown	Dark Brown	Dark Brown
Ash:	--	16.6%	17.2%	33.9%
II. Conditioning requirements				
Polymer required:	Yes	Yes	Yes	Yes
Polymer used:	SNF - 9530	SNF - 9530	SNF - 6266	SNF - 6266
Polymer dosage:	13 lb./DT Active	6 lb./DT Active	21 lb./DT Active	14 lb./DT Active
Floc size/strength:	Good	Good	Good	Good
III. Dewatering tests				
RST Simulation:	6.70%	7.56%	7.32%	7.98%

Both the primary and the septage thickened to 6 ± 1% in the Rotary Drum Thickener. FKC could guarantee these results in a full scale installation regardless of the mix ratio. Polymer dose will very depending on the septage mix ratio and the specific material. Based on the samples collected, polymer dose could be as high as 20 Lbs. / DT.

We hope this information is helpful. Please contact this office with any questions about the lab testing, or if we may be of further assistance to you.

Sincerely,
FKC Co., Ltd.

Wesley Bond

Customer: Central Kitsap WA

Date: 8/14/2023

Tested by: Wes

Material: WAS/Primary/Septage

Sample	Cont. No.	Cont. wt.	Cont.+Sludge	C+BD Sludge	% BD	C+Ash	% Ash	lb/T	Sample Volume (mL)	Polymer Added (cc)	Poly % Active	Polymer Name
Primary - 100%												
Inlet	65	59.714	117.48	59.93	0.37%	59.746	14.81%					
RST	90	88.831	148.861	92.461	6.05%	89.072	6.64%	11.2	1000	10	42%	C-6266
8H	8H	89.829	130.156	92.227	5.95%	89.987	6.59%	11.2	1000	10	42%	C-9530
Fiber (500 mls)	86	32.129		32.605	25.46%							
WAS - 100%												
Inlet	3C	89.866	145.458	90.061	0.35%	89.909	22.05%					
RST	2B	84.885	127.022	86.466	3.75%	85.074	11.95%	18.0	1000	15	42%	C-6266
Septage - 100%												
Inlet	6F	73.451	135.645	73.594	0.23%	73.498	32.87%					
RST	11K	78.448	91.678	79.508	8.01%	78.618	16.04%	27.4	1000	15	42%	C-6266
RST	23	78.054	96.884	79.387	7.08%	78.271	16.28%	18.3	1000	10	42%	C-9530
Fiber (1000 mls)	98	30.818		30.82	0.09%							
Primary + Septage (75% Septage : 25% Primay; by Volume)												
Inlet	19	73.776	126.237	73.934	0.30%		-					
RST	26	30.43	57.989	32.322	6.87%	30.625	10.31%	20.9	1000	15	42%	C-6266
RST	80	28.634	55.394	30.426	6.70%	28.852	12.17%	13.9	1000	10	42%	C-9530

Customer: Central Kitsap WA

Date: 8/18/2023

Tested by: Wes

Material: WAS/Primary/Septage

Sample	Cont. No.	Cont. wt.	Cont.+Sludge	C+BD Sludge	% BD	C+Ash	% Ash	lb/T	Sample Volume (mL)	Polymer Added (cc)	Poly % Active	Polymer Name
Primary - 100%												
Inlet	23	78.043	133.17	78.467	0.77%	78.092	11.56%					
RST	11K	78.45	136.244	82.168	6.43%	78.715	7.13%	10.9	500	10	42%	C-6266
8H	12L	80.528	136.205	83.867	6.00%	80.766	7.13%	10.9	500	10	42%	C-9530
Fiber (500 mls)	80	28.636		30.701	53.70%							
WAS - 100%												
Inlet	13A	54.802	125.643	55.091	0.41%	54.873	24.57%					
RST	2B	84.893	148.45	87.65	4.34%	85.436	19.70%	15.4	1000	15	42%	C-6266
Septage - 100%												
Inlet	10	60.238	133.55	60.67	0.59%	60.348	25.46%					
RST	25	83.687	126.757	86.971	7.62%	84.193	15.41%	21.4	500	15	42%	C-6266
RST	4D	82.806	101.57	84.21	7.48%	83.022	15.38%	21.4	500	15	42%	C-9530
Fiber (500 mls)	18	29.254		29.808	18.80%							
Primary + Septage (75% Septage : 25% Primay; by Volume)												
Inlet	597	58.085	121.061	58.518	0.69%	58.157	16.63%					
RST	1A	76.891	143.726	81.748	7.27%	77.461	11.74%	9.2	1000	15	42%	C-6266
RST	J	54.417	131.936	60.279	7.56%	55.159	12.66%	6.1	1000	10	42%	C-9530

Customer: Central Kitsap WA

Date: 8/22/2023

Tested by: Wes

Material: WAS/Primary/Septage

Sample	Cont. No.	Cont. wt.	Cont.+Sludge	C+BD Sludge	% BD	C+Ash	% Ash	lb/T	Sample Volume (mL)	Polymer Added (cc)	Poly % Active	Polymer Name
Primary - 100%												
Inlet	25	83.688	151.194	85.025	1.98%	83.837	11.14%					
RST	2B	84.912	165.155	90.868	7.42%	85.419	8.51%	12.7	500	30	42%	C-6266
RST	12L	80.526	158.633	85.855	6.82%	80.984	8.59%	12.7	500	30	42%	C-9530
Fiber (500 mls)	188	56.598		60.993	44.38%							
WAS - 100%												
Inlet	J	54.409	124.255	54.68	0.39%	54.483	27.31%					
RST	23	78.047	126.864	80.279	4.57%	78.365	14.25%	16.2	1000	15	42%	C-6266
Septage - 100%												
Inlet	10	60.243	123.645	60.384	0.22%	60.294	36.17%					
RST	6F	73.466	94.197	74.86	6.72%	73.757	20.88%	18.9	1000	10	42%	C-6266
RST	13A	54.825	76.905	56.308	6.72%	55.125	20.23%	18.9	1000	10	42%	C-9530
Fiber (1000 mls)	K58	41.719		42.176	20.55%							
Primary + Septage (75% Septage : 25% Primay; by Volume)												
Inlet	1A	76.896	141.594	77.292	0.61%	76.964	17.17%					
RST	4D	82.808	129.962	86.262	7.32%	83.215	11.78%	20.6	1000	30	42%	C-6266
RST	14S	28.752	59.654	30.854	6.80%	28.995	11.56%	20.6	1000	30	42%	C-9530

Customer: Central Kitsap WA

Date: 8/24/2023

Tested by: Wes

Material: WAS/Primary/Septage

Sample	Cont. No.	Cont. wt.	Cont.+Sludge	C+BD Sludge	% BD	C+Ash	% Ash	lb/T	Sample Volume (mL)	Polymer Added (cc)	Poly % Active	Polymer Name
Primary - 100%												
Inlet	8H	89.806	147.616	90.703	1.55%	89.929	13.71%					
RST	26	30.387	69.559	32.868	6.33%	30.662	11.08%	5.4	500	10	42%	C-6266
RST	19	73.734	143.254	78.447	6.78%	74.223	10.38%	8.1	500	15	42%	C-9530
Fiber (250 mls)	1	53.933		56.001	53.31%							
WAS - 100%												
Inlet	18	55.045	121.831	55.334	0.43%	55.115	24.22%					
RST	82	30.662	67.055	31.948	3.53%	30.915	19.67%	14.6	1000	15	42%	C-6266
Septage - 100%												
Inlet	T4	53.742	122.795	53.869	0.18%	53.785	33.86%					
RST	50	30.458	41.826	31.184	6.39%	30.584	17.36%	22.8	1000	10	42%	C-6266
RST	86	32.134	41.513	32.701	6.05%	32.227	16.40%	22.8	1000	10	42%	C-9530
Fiber (2000 mls)	T3	13.489		13.698	5.68%							
Primary + Septage (75% Septage : 25% Primay; by Volume)												
Inlet	91	31.126	65.217	31.247	0.35%	31.143	14.05%					
RST	81	29.26	70.614	32.559	7.98%	29.637	11.43%	14.2	1000	12	42%	C-6266
RST	13W	68.952	105.254	71.569	7.21%	69.258	11.69%	14.2	1000	12	42%	C-9530

Appendix F. Process and Instrumentation Diagrams

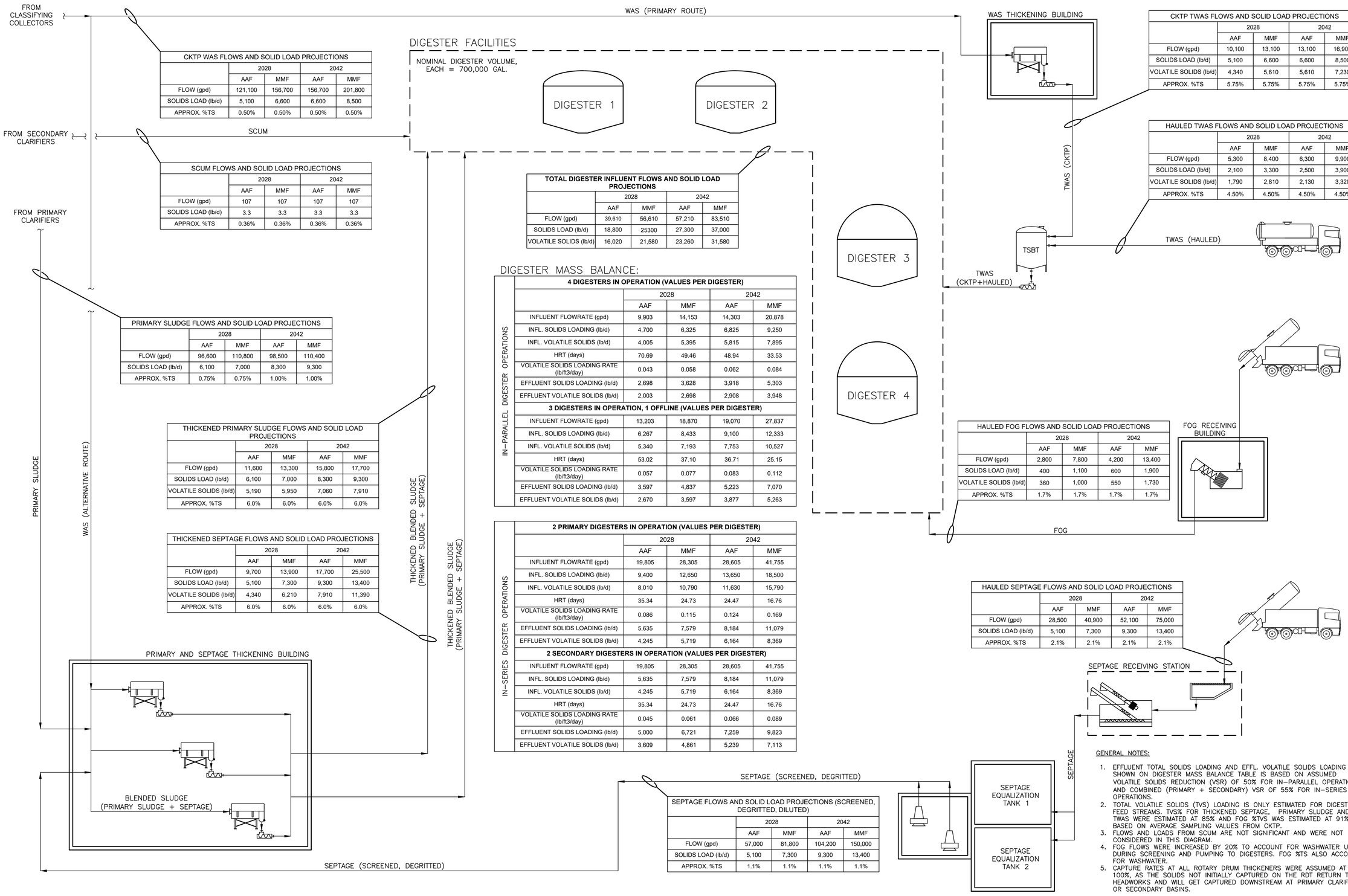

CKTP WAS FLOWS AND SOLID LOAD PROJECTIONS	2028		2042	
	AAF	MMF	AAF	MMF
FLOW (gpd)	121,100	156,700	156,700	201,800
SOLIDS LOAD (lb/d)	5,100	6,600	6,600	8,500
APPROX. %TS	0.50%	0.50%	0.50%	0.50%

SCUM FLOWS AND SOLID LOAD PROJECTIONS	2028		2042	
	AAF	MMF	AAF	MMF
FLOW (gpd)	107	107	107	107
SOLIDS LOAD (lb/d)	3.3	3.3	3.3	3.3
APPROX. %TS	0.36%	0.36%	0.36%	0.36%

PRIMARY SLUDGE FLOWS AND SOLID LOAD PROJECTIONS	2028		2042	
	AAF	MMF	AAF	MMF
FLOW (gpd)	96,600	110,800	98,500	110,400
SOLIDS LOAD (lb/d)	6,100	7,000	8,300	9,300
APPROX. %TS	0.75%	0.75%	1.00%	1.00%

THICKENED PRIMARY SLUDGE FLOWS AND SOLID LOAD PROJECTIONS	2028		2042	
	AAF	MMF	AAF	MMF
FLOW (gpd)	11,600	13,300	15,800	17,700
SOLIDS LOAD (lb/d)	6,100	7,000	8,300	9,300
VOLATILE SOLIDS (lb/d)	5,190	5,950	7,060	7,910
APPROX. %TS	6.0%	6.0%	6.0%	6.0%

THICKENED SEPTAGE FLOWS AND SOLID LOAD PROJECTIONS	2028		2042	
	AAF	MMF	AAF	MMF
FLOW (gpd)	9,700	13,900	17,700	25,500
SOLIDS LOAD (lb/d)	5,100	7,300	9,300	13,400
VOLATILE SOLIDS (lb/d)	4,340	6,210	7,910	11,390
APPROX. %TS	6.0%	6.0%	6.0%	6.0%

TOTAL DIGESTER INFLUENT FLOWS AND SOLID LOAD PROJECTIONS	2028		2042	
	AAF	MMF	AAF	MMF
FLOW (gpd)	39,610	56,610	57,210	83,510
SOLIDS LOAD (lb/d)	18,800	25300	27,300	37,000
VOLATILE SOLIDS (lb/d)	16,020	21,580	23,260	31,580

DIGESTER MASS BALANCE:

IN-PARALLEL DIGESTER OPERATIONS

4 DIGESTERS IN OPERATION (VALUES PER DIGESTER)	2028		2042	
	AAF	MMF	AAF	MMF
INFLUENT FLOWRATE (gpd)	9,903	14,153	14,303	20,878
INFL. SOLIDS LOADING (lb/d)	4,700	6,325	6,825	9,250
INFL. VOLATILE SOLIDS (lb/d)	4,005	5,395	5,815	7,895
HRT (days)	70.69	49.46	48.94	33.53
VOLATILE SOLIDS LOADING RATE (lb/ft3/day)	0.043	0.058	0.062	0.084
EFFLUENT SOLIDS LOADING (lb/d)	2,698	3,628	3,918	5,303
EFFLUENT VOLATILE SOLIDS (lb/d)	2,003	2,698	2,908	3,948
3 DIGESTERS IN OPERATION, 1 OFFLINE (VALUES PER DIGESTER)				
INFLUENT FLOWRATE (gpd)	13,203	18,870	19,070	27,837
INFL. SOLIDS LOADING (lb/d)	6,267	8,433	9,100	12,333
INFL. VOLATILE SOLIDS (lb/d)	5,340	7,193	7,753	10,527
HRT (days)	53.02	37.10	36.71	25.15
VOLATILE SOLIDS LOADING RATE (lb/ft3/day)	0.057	0.077	0.083	0.112
EFFLUENT SOLIDS LOADING (lb/d)	3,597	4,837	5,223	7,070
EFFLUENT VOLATILE SOLIDS (lb/d)	2,670	3,597	3,877	5,263

IN-SERIES DIGESTER OPERATIONS

2 PRIMARY DIGESTERS IN OPERATION (VALUES PER DIGESTER)	2028		2042	
	AAF	MMF	AAF	MMF
INFLUENT FLOWRATE (gpd)	19,805	28,305	28,605	41,755
INFL. SOLIDS LOADING (lb/d)	9,400	12,650	13,650	18,500
INFL. VOLATILE SOLIDS (lb/d)	8,010	10,790	11,630	15,790
HRT (days)	35.34	24.73	24.47	16.76
VOLATILE SOLIDS LOADING RATE (lb/ft3/day)	0.086	0.115	0.124	0.169
EFFLUENT SOLIDS LOADING (lb/d)	5,635	7,579	8,184	11,079
EFFLUENT VOLATILE SOLIDS (lb/d)	4,245	5,719	6,164	8,369
2 SECONDARY DIGESTERS IN OPERATION (VALUES PER DIGESTER)				
INFLUENT FLOWRATE (gpd)	19,805	28,305	28,605	41,755
INFL. SOLIDS LOADING (lb/d)	5,635	7,579	8,184	11,079
INFL. VOLATILE SOLIDS (lb/d)	4,245	5,719	6,164	8,369
HRT (days)	35.34	24.73	24.47	16.76
VOLATILE SOLIDS LOADING RATE (lb/ft3/day)	0.045	0.061	0.066	0.089
EFFLUENT SOLIDS LOADING (lb/d)	5,000	6,721	7,259	9,823
EFFLUENT VOLATILE SOLIDS (lb/d)	3,609	4,861	5,239	7,113

SEPTAGE FLOWS AND SOLID LOAD PROJECTIONS (SCREENED, DEGRITTED, DILUTED)	2028		2042	
	AAF	MMF	AAF	MMF
FLOW (gpd)	57,000	81,800	104,200	150,000
SOLIDS LOAD (lb/d)	5,100	7,300	9,300	13,400
APPROX. %TS	1.1%	1.1%	1.1%	1.1%

CKTP TWAS FLOWS AND SOLID LOAD PROJECTIONS	2028		2042	
	AAF	MMF	AAF	MMF
FLOW (gpd)	10,100	13,100	13,100	16,900
SOLIDS LOAD (lb/d)	5,100	6,600	6,600	8,500
VOLATILE SOLIDS (lb/d)	4,340	5,610	5,610	7,230
APPROX. %TS	5.75%	5.75%	5.75%	5.75%

HAULED TWAS FLOWS AND SOLID LOAD PROJECTIONS	2028		2042	
	AAF	MMF	AAF	MMF
FLOW (gpd)	5,300	8,400	6,300	9,900
SOLIDS LOAD (lb/d)	2,100	3,300	2,500	3,900
VOLATILE SOLIDS (lb/d)	1,790	2,810	2,130	3,320
APPROX. %TS	4.50%	4.50%	4.50%	4.50%

HAULED FOG FLOWS AND SOLID LOAD PROJECTIONS	2028		2042	
	AAF	MMF	AAF	MMF
FLOW (gpd)	2,800	7,800	4,200	13,400
SOLIDS LOAD (lb/d)	400	1,100	600	1,900
VOLATILE SOLIDS (lb/d)	360	1,000	550	1,730
APPROX. %TS	1.7%	1.7%	1.7%	1.7%

HAULED SEPTAGE FLOWS AND SOLID LOAD PROJECTIONS	2028		2042	
	AAF	MMF	AAF	MMF
FLOW (gpd)	28,500	40,900	52,100	75,000
SOLIDS LOAD (lb/d)	5,100	7,300	9,300	13,400
APPROX. %TS	2.1%	2.1%	2.1%	2.1%

GENERAL NOTES:

1. EFFLUENT TOTAL SOLIDS LOADING AND EFFL. VOLATILE SOLIDS LOADING SHOWN ON DIGESTER MASS BALANCE TABLE IS BASED ON ASSUMED VOLATILE SOLIDS REDUCTION (VSR) OF 50% FOR IN-PARALLEL OPERATIONS AND COMBINED (PRIMARY + SECONDARY) VSR OF 55% FOR IN-SERIES OPERATIONS.
2. TOTAL VOLATILE SOLIDS (TVS) LOADING IS ONLY ESTIMATED FOR DIGESTER FEED STREAMS. TVS% FOR THICKENED SEPTAGE, PRIMARY SLUDGE AND TWAS WERE ESTIMATED AT 85% AND FOG %TVS WAS ESTIMATED AT 91% BASED ON AVERAGE SAMPLING VALUES FROM CKTP.
3. FLOWS AND LOADS FROM SCUM ARE NOT SIGNIFICANT AND WERE NOT CONSIDERED IN THIS DIAGRAM.
4. FOG FLOWS WERE INCREASED BY 20% TO ACCOUNT FOR WASHWATER USED DURING SCREENING AND PUMPING TO DIGESTERS. FOG %TS ALSO ACCOUNTS FOR WASHWATER.
5. CAPTURE RATES AT ALL ROTARY DRUM THICKENERS WERE ASSUMED AT 100%, AS THE SOLIDS NOT INITIALLY CAPTURED ON THE RDT RETURN TO HEADWORKS AND WILL GET CAPTURED DOWNSTREAM AT PRIMARY CLARIFIERS OR SECONDARY BASINS.

HDR ENGINEERING, INC.
929 108th Ave NE
Suite 1300
Bellevue, WA 98004

0 1/2 1
IF THIS BAR DOES NOT MEASURE 1" THEN DRAWING IS NOT TO FULL SCALE

KITSAP COUNTY
CENTRAL KITSAP TREATMENT PLANT

OVERALL DIGESTER FACILITIES MASS BALANCE DIAGRAM

PROJECT NO.

EXHIBIT

INSTRUMENT SYMBOLS

	PRIMARY LOCATION (ACCESSIBLE) (1)	PRIMARY LOCATION (INACCESSIBLE) (2)	FIELD MOUNTED	AUXILIARY LOCATION (ACCESSIBLE) (1)	AUXILIARY LOCATION (INACCESSIBLE) (2)
INSTRUMENT	a b	a b	a b	a b	a b
SHARED DISPLAY SHARED CONTROL	a b	a b	a b	a b	a b
COMPUTER FUNCTION	a b	a b	a b	a b	a b
PROGRAMMABLE LOGIC CONTROL	a b	a b	a b	a b	a b

(1) NORMALLY ACCESSIBLE TO OPERATOR

(2) NORMALLY INACCESSIBLE TO OPERATOR (BEHIND–THE–PANEL)

a INSTRUMENT IDENTIFICATION/TAG NUMBER (SEE TAG DESIGNATION FOR MORE INFO)

b INSTRUMENT LOOP NUMBER

SINGLE INSTRUMENT OR OTHER COMPONENT HAVING MULTIPLE FUNCTIONS

I — RELAY INTERLOCK LOGIC – SEE SCHEMATICS OR SPECIFICATIONS FOR MORE INFORMATION

INDICATING LIGHT – FIELD MOUNTED, MAY BE LOCATED ON A CONTROL PANEL

INDICATING LIGHT – PANEL MOUNTED

ACTUATOR SYMBOLOGY

M P S

OPERATOR ABBREVIATIONS:
M = MOTOR
P = PNEUMATIC
S = SOLENOID

CONTROL FUNCTION DESTINATIONS

AM	AUTO–MANUAL	OIT	OPERATOR INTERFACE TERMINAL
E–STOP	EMERGENCY STOP	OO	ON/OFF
FLT	FAULT	OOR	ON/OFF/REMOTE
FR	FORWARD/REVERSE	OSC	OPEN/STOP/CLOSE
FWD	FORWARD	POT	POTENTIOMETER
HIM	HUMAN INTERFACE MODULE	RL	RAISE/LOWER
HORN	ALARM/WARNING HORN	RSL	RAISE/STOP/LOWER
HOA	HAND/OFF/AUTO	REV	REVERSE
LOA	LOCAL/OFF/AUTO	RST	RESET
LOR	LOCAL/OFF/REMOTE	SIL	SILENCE
LR	LOCAL/REMOTE	SS	START/STOP
OC	OPEN/CLOSE	ST	START
OCA	OPEN/CLOSE/AUTO	TR	TIP/RETURN

CROSS REFERENCE SYMBOLOGY

DS
D | P–610
TO DIGESTER 1

CONTINUATION OF DS PIPE ON DRAWING P–610

DS
D | P–620
FROM DIGESTER 2 TRANSFER PUMP

CONTINUATION OF DS PIPE ON DRAWING P–620

INSTRUMENTATION LINE SYMBOLOGY

PROCESS LINE

ELECTRICAL SIGNAL

DIRECTION OF FLOW

VENDOR SKID

CONTROL PANELS

SOFTWARE OR DATA LINK

ABBREVIATIONS

FO	FIBER OPTIC CABLE	PLC	PROGRAMMABLE LOGIC CONTROLLER
FOR	FIBER OPTIC REPEATER	RIO	REMOTE I/O
FOT	FIBER OPTIC TRANSCEIVER	RVSS	REDUCED VOLTAGE SOLID–STATE STARTER
HMI	HUMAN MACHINE INTERFACE	RTU	REMOTE TERMINAL UNIT
LCS	LOCAL CONTROL STATION	SW	SEAL WATER
MCC	MOTOR CONTROL CENTER	TC	THERMOCOUPLE
MCP	MAIN CONTROL PANEL	TSP	TWISTED SHIELD PAIR
MOV	MOTORIZED ACTUATOR FOR VALVE OR GATE	UPS	UNINTERRUPTIBLE POWER SUPPLY
MS	MOTOR STARTER	VFD	VARIABLE FREQUENCY DRIVE
NC	NORMALLY CLOSED	VSD	VARIABLE SPEED DRIVE
NO	NORMALLY OPEN		
OIT	OPERATOR INTERFACE TERMINAL		

EQUIPMENT TAG SCHEMA

EQUIPMENT CODE
P 5522– – – – –EQUIPMENT TAG NUMBER
P– – – – – – – –EQUIPMENT IDENTIFIER
5522– – – –LOOP OR EQUIPMENT IDENTIFIER

PLC / REMOTE I/O POINTS

ANALOG INPUT

DISCRETE INPUT

ANALOG OUTPUT

DISCRETE OUTPUT

INSTRUMENT TAG SCHEMA

PDIT 1234A
XX

TYPICAL TAG FORMAT
PDIT 1234A– – – – –INSTRUMENT TAG NUMBER
P– – – – – – – – – –MEASURED OR INITIATING VARIABLE LETTER
D– – – – – – – – – –MODIFIED LETTER, WHEN REQUIRED
IT– – – – – – – – –SUCCEEDING LETTERS; READOUT OR PASSIVE FUNCTION AND/OR OUTPUT FUNCTION WITH MODIFIER WHEN REQUIRED
12– – – – – –PLANT AREA
34– – – – –LOOP NUMBER
A– – – –INSTRUMENT SUFFIX
XX– – –PARAMETER MEASURED BY ANALYTICAL INSTRUMENT

	FIRST LETTER		SECOND OR SUCCEEDING LETTERS		
	MEASURED OR INITIATING VARIABLE	MODIFIER	READOUT OR PASSIVE FUNCTION	OUTPUT FUNCTION	MODIFIER FUNCTION
A	ANALYSIS	ALARM	ALARM		
B	BURNER, COMBUSTION		USER'S CHOICE	CLOSE, STOP, DECREASE	USER'S CHOICE
C	CHLORINATOR	CLOSED		CONTROL	
D	USER'S CHOICE	DIFFERENTIAL		OPEN, START, INCREASE	
E	VOLTAGE		SENSOR (PRIMARY ELEMENT)		
F	FLOW RATE	RATIO (FRACTION)			FAIL
G	USER'S CHOICE		GLASS, GAUGE, VIEWING DEVICE		
H	HAND	HIGH			HIGH, OPENED
I	CURRENT (ELECTRICAL)		INDICATION		
J	POWER	SCAN			
K	TIME, TIME SCHEDULE	TIME RATE OF CHANGE		CONTROL STATION	
L	LEVEL	LOW LIMIT	LIGHT		LOW, CLOSED
M	MOTOR, MOTION	MOMENTARY		MOTOR	MIDDLE, INTERMEDIATE
N	USER'S CHOICE		USER'S CHOICE	USER'S CHOICE	ON OR OPERATE
O	USER'S CHOICE		ORIFICE, RESTRICTION		OVERLOAD
P	PRESSURE, VACUUM		POINT (TEST CONNECTION)	PUMP	
Q	QUANTITY	INTEGRATE, TOTALIZE			
R	RADIATION		RECORD		
S	SPEED, FREQUENCY	SAFETY		SWITCH	
T	TEMPERATURE			SCAN	
U	MULTIVARIABLE		MULTIFUNCTION	MULTIFUNCTION	MULTIFUNCTION
V	VIBRATION, MECHANICAL ANALYSIS, VALVE			VALVE, DAMPER, LOUVER	
W	WEIGHT, FORCE		WELL		
X	UNCLASSIFIED	X–AXIS	UNCLASSIFIED	UNCLASSIFIED	UNCLASSIFIED
Y	EVENT, STATE OR PRESENCE	Y–AXIS		RELAY, COMPUTE, CONVERT	
Z	POSITION, DIMENSION	Z–AXIS		DRIVER, ACTUATOR, UNCLASSIFIED	

GENERAL COMMENTS

P&ID SHEET INDEX

SHEET #	DRAWING TITLE
P-001	INSTRUMENT SYMBOLS AND IDENTIFICATION SYSTEMS 1
P-002	INSTRUMENT SYMBOLS AND IDENTIFICATION SYSTEMS 2
P-011	NETWORK ARCHITECTURE
P-018	MAINTENANCE BUILDING NETWORK DIAGRAM
P-180	IN-PLANT PUMP STATION
P-510	SEPTAGE HANDLING STATION - 1
P-511	SEPTAGE HANDLING STATION - 2
P-512	SEPTAGE EQUALIZATION TANKS
P-513	SEPTAGE EQUALIZATION TANKS PUMP WET WELL
P-520	FOG HANDLING STATION - 1
P-521	FOG HANDLING STATION - 2
P-526	FOG RECEIVING BUILDING MONITORING
P-528	SEPTAGE AND FOG RECEIVING NETWORK DIAGRAM
P-550	SLUDGE THICKENING BUILDING INFLUENT FLOW METERS
P-551	PRIMARY SLUDGE/SEPTAGE THICKENER 1
P-552	PRIMARY SLUDGE/SEPTAGE THICKENER 2
P-553	PRIMARY SLUDGE/SEPTAGE THICKENER 3
P-554	SLUDGE THICKENING BUILDING EFFLUENT FLOW METERS
P-560	PRIMARY SLUDGE/SEPTAGE POLYMER SYSTEM - 1
P-561	PRIMARY SLUDGE/SEPTAGE POLYMER SYSTEM - 2
P-562	PRIMARY SLUDGE/SEPTAGE POLYMER SYSTEM - 3
P-563	PRIMARY AND SEPTAGE THICKENING ODOR CONTROL
P-566	PRIMARY SLUDGE/SEPTAGE BUILDING MONITORING
P-568	PRIMARY AND SEPTAGE THICKENING BLGD NETWORK DIAGRAM
P-590	SEPTAGE/FOG ODOR CONTROL
P-610	DIGESTER 1
P-620	DIGESTER 2
P-621	DIGESTERS 1 AND 2 MIXING SYSTEM
P-622	DIGESTERS 1 AND 2 RECIRCULATION PUMPS
P-623	DIGESTERS 1 AND 2 HEAT EXCHANGERS
P-626	DIGESTERS 1 AND 2 BUILDING MONITORING
P-628	DIGESTERS 1 AND 2 PROCESS BUILDING NETWORK DIAGRAM
P-630	DIGESTER 3
P-640	DIGESTER 4
P-641	DIGESTERS 3 AND 4 MIXING SYSTEM
P-642	DIGESTERS 3 AND 4 RECIRCULATION PUMPS
P-643	DIGESTERS 3 AND 4 HEAT EXCHANGERS
P-644	DIGESTERS 3 AND 4 GAS HOLDER COVER BLOWERS
P-646	DIGESTERS 3 AND 4 BUILDING MONITORING
P-648	DIGESTERS 3 AND 4 PROCESS BUILDING NETWORK DIAGRAM
P-688	DIGESTER CONTROL BUILDING NETWORK DIAGRAM
P-700	CENTRATE PUMP STATION
P-701	CENTRATE STORAGE
P-708	CENTRATE STORAGE NETWORK DIAGRAM
P-790	CENTRATE STORAGE ODOR CONTROL

ISSUE	DATE	DESCRIPTION

PROJECT MANAGER	
Design Manager	
Civil	J. Becker
Structural	M. Hijazi
Process	J. Zahller
Mechanical	K. Sutton
Electrical/Instrumentation	L. Kirmeyer / J. McReynolds
Contract No.	
PROJECT NUMBER	

PROCESS:
JEFFREY D. ZAHLLER STATE OF WASHINGTON 44824 REGISTERED PROFESSIONAL ENGINEER
PRELIMINARY
12/07/23

INSTRUMENTATION:
JOEL H. MCREYNOLDS STATE OF WASHINGTON 20100328 REGISTERED PROFESSIONAL ENGINEER
PRELIMINARY
12/07/23

KITSAP COUNTY

CENTRAL KITSAP TREATMENT PLANT

PROCESS AND INSTRUMENTATION DIAGRAMS

INSTRUMENT SYMBOLS AND IDENTIFICATION SYSTEMS - 1

0 1" 2"

FILENAME
SCALE

SHEET
P-001

EQUIPMENT AND PIPING SYMBOLOGY

PROCESS EQUIPMENT

- SEPTAGE MECHANICAL BAR SCREEN
- FOG SCREENING SYSTEM (SVI BEAST)
- SEPTAGE SCREENING AND DEGRITTING SYSTEM
- ROTARY DRUM THICKENER (RDT)
- HEAT EXCHANGER
- POLYMER MIXING CHAMBER
- ROCK TRAP
- MEMBRANE COVER DIGESTER
- FIXED STEEL COVER DIGESTER

PUMPS AND BLOWERS

- CENTRIFUGAL PUMP
- PROGRESSIVE CAVITY PUMP
- ROTARY LOBE PUMP
- SUBMERSIBLE PUMP
- CENTRIFUGAL BLOWER

TANKS

- EMULSION POLYMER TOTE
- GENERIC TANK

PRIMARY INSTRUMENTS

- AE — INLINE ANALYTICAL SENSOR
- M — MAGNETIC FLOWMETER
- TD — THERMAL DISPERSION FLOW METER
- LEVEL FLOAT
- ULTRASONIC LEVEL SENSOR
- ANALYTICAL PROBE

VALVES

- BALL VALVE (OPEN/CLOSED)
- GATE VALVE
- PINCH VALVE
- PLUG VALVE (OPEN/CLOSED)
- CHECK VALVE
- BUTTERFLY VALVE
- AIR RELEASE VALVE
- PRESSURE/VACUUM RELIEF VALVE

MISCELLANEOUS

- AIR FILTER
- BACKDRAFT DAMPER
- BACKFLOW PREVENTER
- BUTTERFLY DAMPER
- CONDITIONING SPRAY
- DIGESTER MIXING NOZZLE
- FLEXIBLE CONNECTION
- HOSE CONNECTION
- VENT
- SLIDE GATE
- GREASE FILTER
- HOSE BIB
- INLIDE SLUDGE GRINDER
- DIAPHRAGM SEAL
- INLINE ISOLATION RING
- MIXER
- MIXING VALVE
- CONCENTRIC REDUCER
- ECCENTRIC REDUCER
- SPRAY NOZZLE
- TRUCK UNLOADING CONNECTOR
- S — SEAL WATER STATION

ABBREVIATIONS

SERVICE ABBREVIATIONS

2W	NO. 2 WATER
3W	NO. 3 WATER
3WHP	NO. 3 WATER HIGH PRESSURE
3WHP/H	NO. 3 WATER HIGH PRESSURE (HOT/HEATED)
BS	BLENDED SLUDGE
CEN	CENTRATE
D	DRAIN
DCA	DIGESTER COVER AIR
DS	DIGESTED SLUDGE
FA	FOUL AIR
FLT	FILTRATE
FOG	FOG (FATS, OILS, & GREASE)
FOG-B	BYPASS FOG
FOG-D	DECANT FOG
FOG-W	WASTE FOG
GSE	GREASE
HWR	HOT WATER RETURN
HWS	HOT WATER SUPPLY
LSG	LOW PRESSURE SLUDGE GAS
OF	OVERFLOW
PD	PROCESS DRAINAGE
POL	POLYMER
PS	PRIMARY SLUDGE
PSC	PRIMARY SCUM
RDS	RECIRCULATED DIGESTED SLUDGE
SEPT	SEPTAGE
TBS	THICKENED BLENDED SLUDGE (SEPTAGE + PRIMARY SLUDGE)
TSEPT	THICKENED SEPTAGE
TWAS	THICKENED WASTE ACTIVATED SLUDGE
WAS	WASTE ACTIVATED SLUDGE

EQUIPMENT ABBREVIATIONS

B	BLOWER
CP	CONTROL PANEL
CV	CONTROL VALVE
DU	DRIVE UNIT
F	FAN
GDR	GRINDER
GEN	GENERATOR
HX	HEAT EXCHANGER
M	MOTOR
MCC	MOTOR CONTROL CENTER
MXR	MIXER
P	PUMP
PLC	PROGRAMMABLE LOGIC CONTROLLER
PNL	PANEL
PRV	PRESSURE RELIEF OR REDUCING VALVE
RDT	ROTARY DRUM THICKENER
SCN	MECHANICAL SCREENING SYSTEM
SEP	SEPARATOR
SG	SLUICE GATE
SLG	SLIDE GATE
SV	SOLENOID VALVE
SWBD	SWITCHBOARD
SWGR	SWITCHGEAR
T	TANK
TRV	TEMPERATURE REGULATING VALVE
UPS	UNINTERUPTIBLE POWER SUPPLY
V	VALVE
VFD	VARIABLE FREQUENCY DRIVE
WH	WATER HEATER

PLANT PROCESS AREA NUMBERING

THE PLANT USES A NUMBERING SYSTEM FOR DESIGNATING PLANT PROCESS AREAS AND BUILDINGS.

AREA CODE	FACILITY NAME
50	GENERAL CIVIL SITE
100 SERIES	**PRELIMINARY TREATMENT**
100	HEADWORKS
110	GRIT
120	PRIMARY SEDIMENTATION
140	ODOR CONTROL
200 SERIES	**SECONDARY TREATMENT**
200	POWER/BLOWER BUILDING
210	EXISTING AERATION BASINS
220	RAS MIXING BOX, WAS PUMPS
230	NEW AERATION BASINS
240	CARBON FEED
250 SERIES	**SECONDARY CLARIFIERS**
300 SERIES	**PROCESS WATER**
300	PROCESS WATER PUMPS
300	RECLAIMED WATER FEED PUMPS
310, 320 SERIES	**UV DISINFECTION**
330 SERIES	**UV DISINFECTION FUTURE**
400 SERIES	**WAS THICKENING**
400	THICKENER SYSTEM
420	FOUL AIR
500 SERIES	**SOLIDS HANDLING FACILITIES**
510	SEPTAGE RECEIVING STATION AND EQUALIZATION TANKS
520	FOG RECEIVING BUILDING
550	PRIMARY AND SEPTAGE THICKENING BUILDING
560	PRIMARY AND SEPTAGE THICKENING POLYMER SYSTEM
600 SERIES	**DIGESTERS**
600	THICKENED SLUDGE BLENDING TANK
610	DIGESTER 1
620	DIGESTER 2
630	DIGESTER 3
640	DIGESTER 4
650	DIGESTED SLUDGE STORAGE TANK
670	DIGESTER GAS
680	BOILERS
700	CENTRATE STORAGE
710	DEWATERING
720	LIQUID ALUM
730	HYPOCHLORITE
800 SERIES	**RECLAIMED WATER**
810	RECLAIMED WATER FEED PUMPS
820	RECLAIMED WATER FILTERS
830	RECLAIMED WATER HYDROPNEUMATIC TANK
850	RECLAIMED WATER HYPOCHLORITE SYSTEM
900 SERIES	**COGENERATION**
900	HOT WATER CIRCULATION PUMPS
910	DIGESTER GAS FLARE
920	DIGESTER GAS TREATMENT SYSTEM
930	ENGINE
950	ADDITIONAL STANDBY ENGINE GENERATOR

ISSUE	DATE	DESCRIPTION

PROJECT MANAGER	Andrew Staples
Design Manager	J. Zahller
Civil	J. Becker
Structural	M. Hijazi
Process	J. Zahller
Mechanical	K. Sutton
Electrical/Instrumentation	L. Kirmeyer / J. McReynolds
Contract No.	
PROJECT NUMBER	10367638

PROCESS: JEFFREY D. ZAHLLER, STATE OF WASHINGTON, 44824, REGISTERED PROFESSIONAL ENGINEER — PRELIMINARY — 12/07/23

INSTRUMENTATION: JOEL H. MCREYNOLDS, STATE OF WASHINGTON, 20100328, REGISTERED PROFESSIONAL ENGINEER — PRELIMINARY — 12/07/23

KITSAP COUNTY

CENTRAL KITSAP TREATMENT PLANT

PROCESS AND INSTRUMENTATION DIAGRAM

INSTRUMENT SYMBOLS AND IDENTIFICATION SYSTEMS - 2

0 1" 2"

FILENAME

SCALE

SHEET **P-002**

GENERAL NOTES:

1. THIS DRAWING IS INTENDED TO SHOW THE OVERALL LAYOUT OF NETWORK CONNECTIONS BETWEEN DIFFERENT NETWORK CONNECTION POINTS ACROSS THE PLANT. SEE INDIVIDUAL NETWORK DIAGRAMS FOR DETAILS ON WHAT EQUIPMENT IS AT EACH NETWORK CONNECTION POINT.

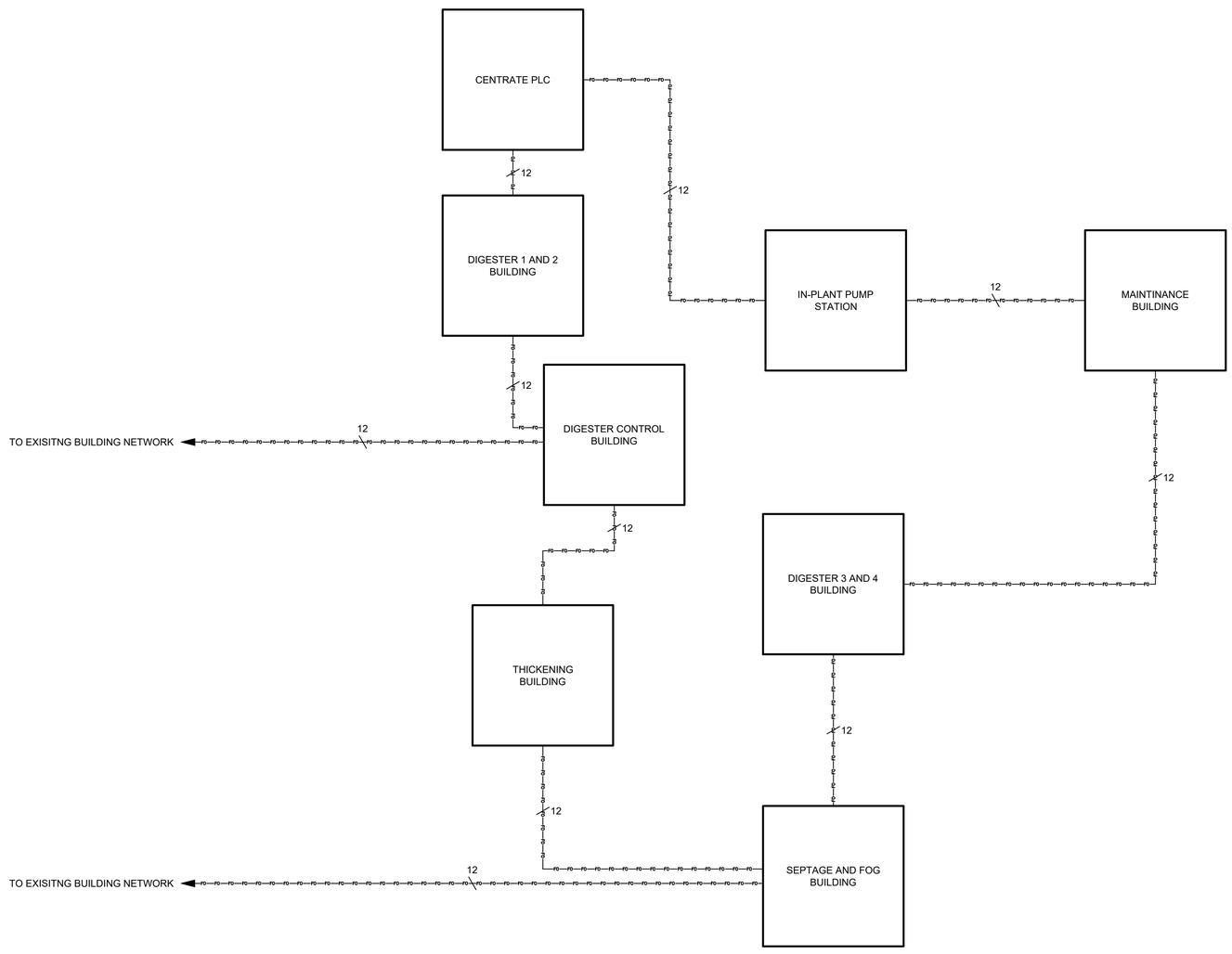

LEGEND

- CAT 6 CABLE
- FIBER OPTIC
- SERIAL CABLE
- # OR # — NUMBER OF FIBER OPTIC STRANDS
- EQUIPMENT AND STRUCTURES INSTALLED UNDER THIS CONTRACT
- EXISTING EQUIPMENT AND STRUCTURES

ISSUE	DATE	DESCRIPTION

PROJECT MANAGER	**Andrew Staples**
Design Manager	**J. Zahller**
Civil	**J. Becker**
Structural	**M. Hijazi**
Process	**J. Zahller**
Mechanical	**K. Sutton**
Electrical/Instrumentation	**L. Kirmeyer / J. McReynolds**
Contract No.	
PROJECT NUMBER	**10367638**

PROCESS:

JEFFREY D. ZAHLLER STATE OF WASHINGTON 44824 REGISTERED PROFESSIONAL ENGINEER
PRELIMINARY
12/07/23

INSTRUMENTATION:

JOEL H. MCREYNOLDS STATE OF WASHINGTON 20100328 REGISTERED PROFESSIONAL ENGINEER
PRELIMINARY
12/07/23

KITSAP COUNTY

CENTRAL KITSAP TREATMENT PLANT

PROCESS AND INSTRUMENTATION DIAGRAM

NETWORK ARCHITECTURE

0 1" 2"

FILENAME

SCALE

SHEET **P-011**

GENERAL NOTES:

1. ALL ETHERNET SWITCHES TO BE MANAGED, WITH SEPARATE VLANS SET UP FOR NETWORK MANAGEMENT, POWER MONITORING, AND CONTROL NETWORKS. ENSURE THAT EACH DEVICE IS CONNECTED TO THE APPROPRIATE VLAN.

KEYNOTES: (X)

1. ITEMS ON THIS NETWORK ARE TO BE CONNECTED IN A FAULT TOLERANT DEVICE-LEVEL RING SUCH THAT THE FAILURE OF ANY SINGLE DEVICE WILL STILL ALLOW ALL OTHER DEVICES TO CONTINUE TO COMMUNICATE NORMALLY.

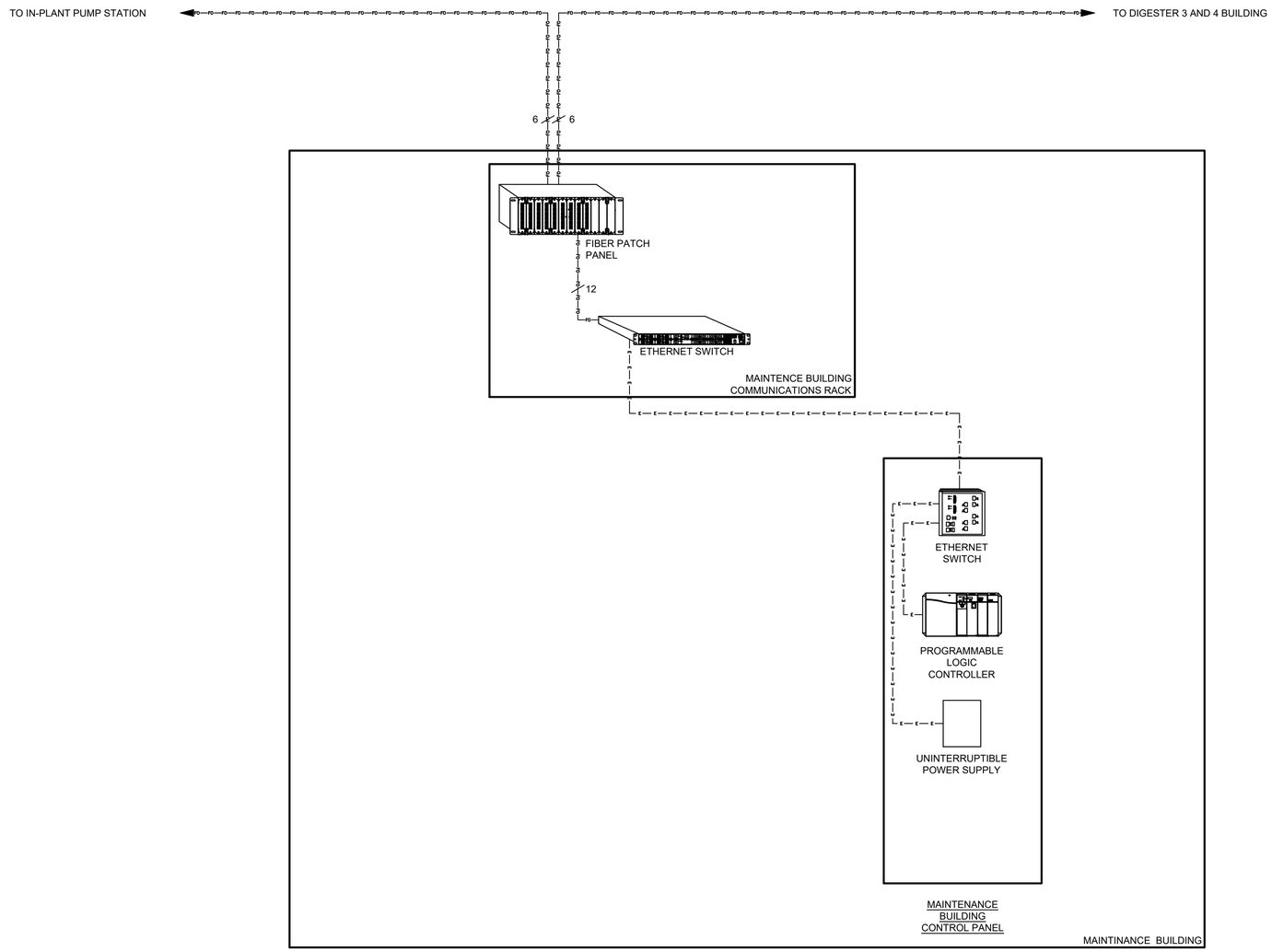

LEGEND

- CAT 6 CABLE
- FIBER OPTIC
- SERIAL CABLE
- # OR # — NUMBER OF FIBER OPTIC STRANDS
- EQUIPMENT AND STRUCTURES INSTALLED UNDER THIS CONTRACT
- EXISTING EQUIPMENT AND STRUCTURES

ISSUE	DATE	DESCRIPTION

PROJECT MANAGER	Andrew Staples
Design Manager	J. Zahller
Civil	J. Becker
Structural	M. Hijazi
Process	J. Zahller
Mechanical	K. Sutton
Electrical/Instrumentation	L. Kirmeyer / J. McReynolds
Contract No.	
PROJECT NUMBER	10367638

PROCESS: JEFFREY D. ZAHLLER, STATE OF WASHINGTON, 44824, REGISTERED PROFESSIONAL ENGINEER — PRELIMINARY — 12/07/23

INSTRUMENTATION: JOEL H. MCREYNOLDS, STATE OF WASHINGTON, 201003328, REGISTERED PROFESSIONAL ENGINEER — PRELIMINARY — 12/07/23

KITSAP COUNTY

CENTRAL KITSAP TREATMENT PLANT

PROCESS AND INSTRUMENTATION DIAGRAM

MAINTENANCE BUILDING NETWORK DIAGRAM

0 1" 2"

FILENAME

SCALE

SHEET P-018

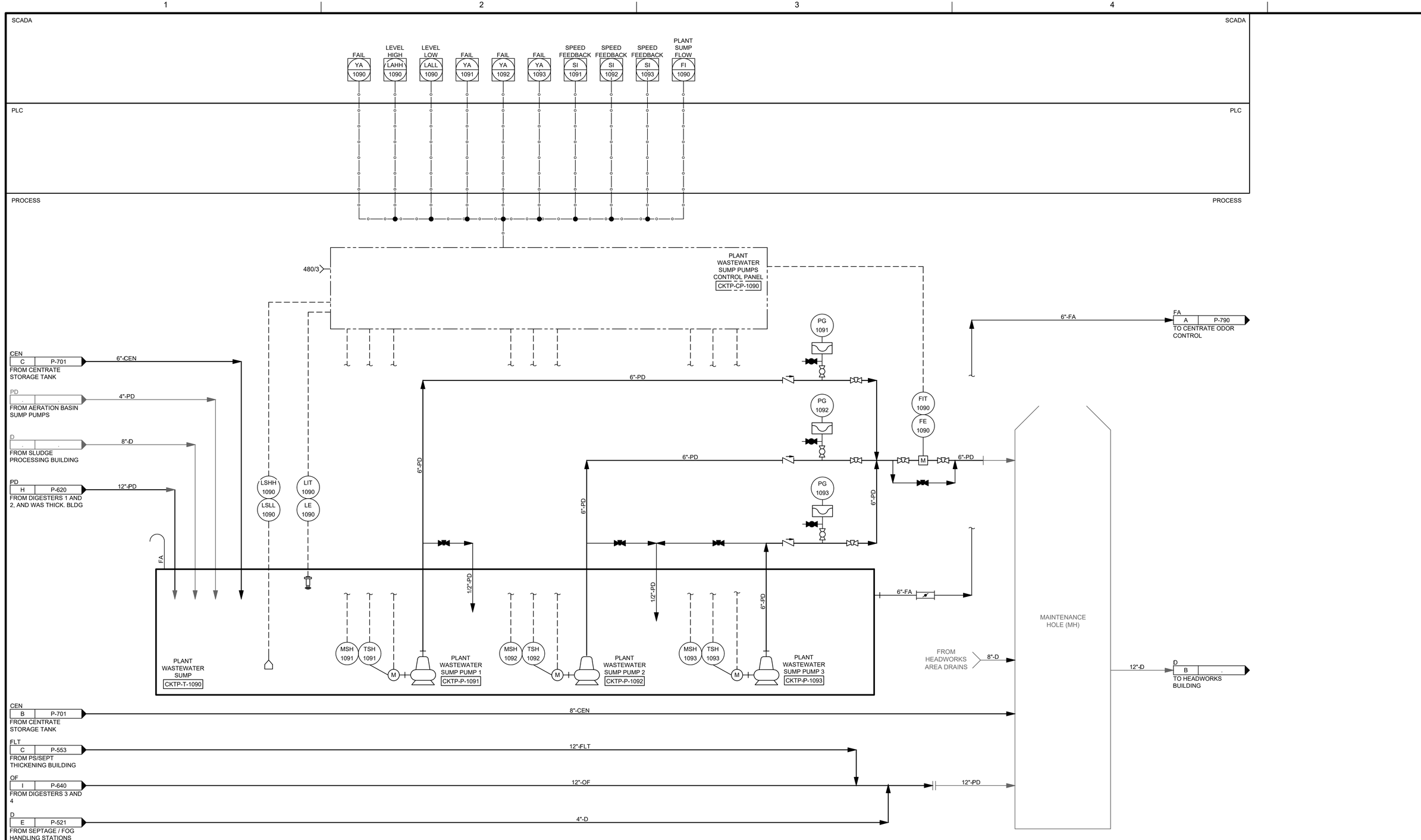

ISSUE	DATE	DESCRIPTION

PROJECT MANAGER	Andrew Staples
Design Manager	J. Zahller
Civil	J. Becker
Structural	M. Hijazi
Process	J. Zahller
Mechanical	K. Sutton
Electrical/Instrumentation	L. Kirmeyer / J. McReynolds
Contract No.	
PROJECT NUMBER	10367638

PROCESS:

JEFFREY D. ZAHLLER, STATE OF WASHINGTON, 44824, REGISTERED PROFESSIONAL ENGINEER
PRELIMINARY
12/07/23

INSTRUMENTATION:

JOEL H. MCREYNOLDS, STATE OF WASHINGTON, 20100328, REGISTERED PROFESSIONAL ENGINEER
PRELIMINARY
12/07/23

KITSAP COUNTY

CENTRAL KITSAP TREATMENT PLANT

PROCESS AND INSTRUMENTATION DIAGRAMS

IN-PLANT PUMP STATION

0 1" 2"

FILENAME

SCALE

SHEET P-180

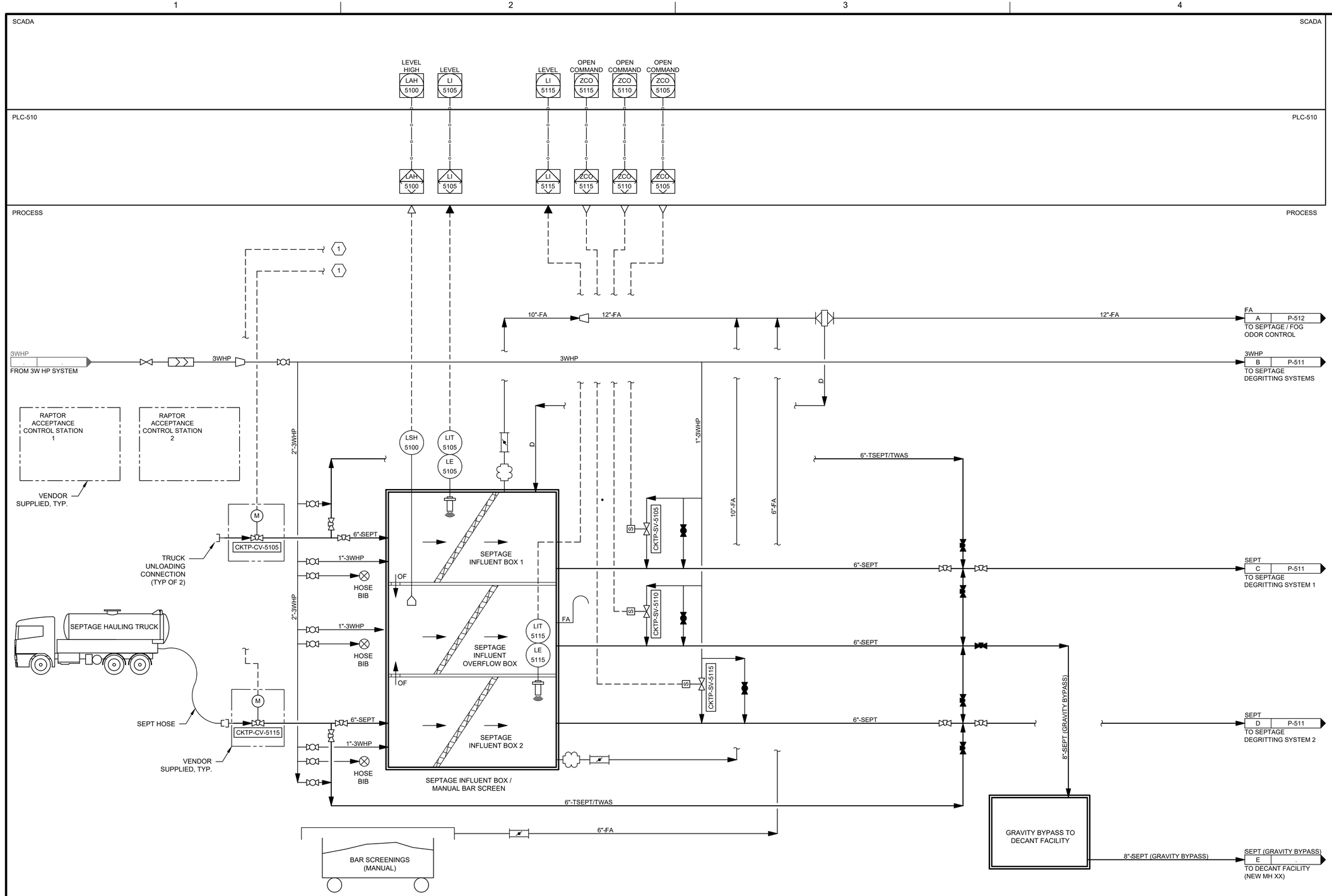

KEYNOTES:

1. POWER SUPPLY AND SIGNAL CABLES TO CONTROL VALVES CV 5105 AND CV 5115 ARE CONNECTED TO CONTROL PANELS CP 5120 AND 5130, RESPECTIVELY (SEE DWG P-511).

ISSUE	DATE	DESCRIPTION

PROJECT MANAGER	Andrew Staples
Design Manager	J. Zahller
Civil	J. Becker
Structural	M. Hijazi
Process	J. Zahller
Mechanical	K. Sutton
Electrical/Instrumentation	L. Kirmeyer / J. McReynolds
Contract No.	
PROJECT NUMBER	10367638

PROCESS: JEFFREY D. ZAHLLER, STATE OF WASHINGTON, 44824, REGISTERED PROFESSIONAL ENGINEER — PRELIMINARY — 12/07/23

INSTRUMENTATION: JOEL H. MCREYNOLDS, STATE OF WASHINGTON, 20100328, REGISTERED PROFESSIONAL ENGINEER — PRELIMINARY — 12/07/23

KITSAP COUNTY

CENTRAL KITSAP TREATMENT PLANT

PROCESS AND INSTRUMENTATION DIAGRAMS

SEPTAGE HANDLING STATION - 1

0 1" 2"

FILENAME

SCALE

SHEET P-510

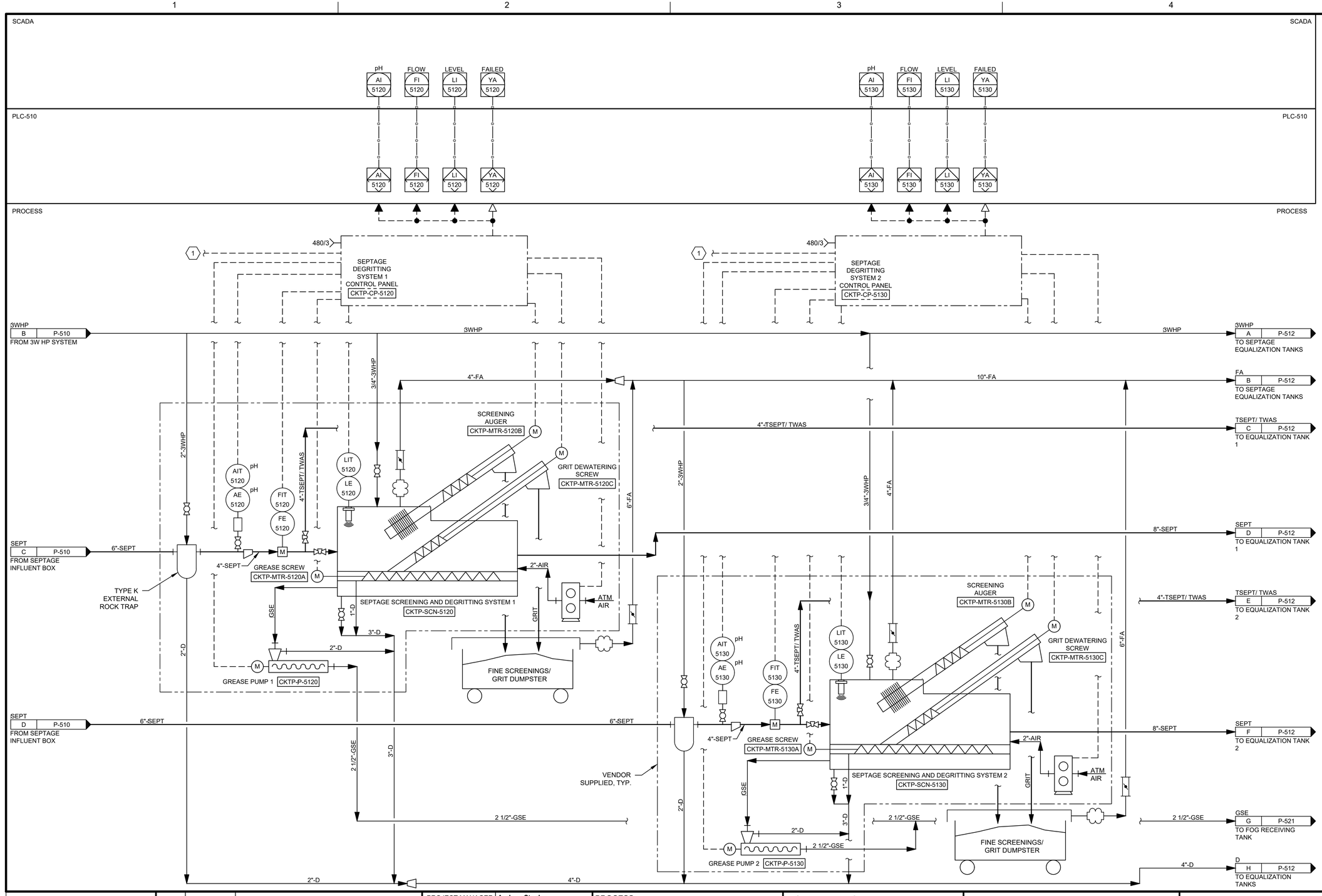

KEYNOTES:

1. POWER SUPPLY AND SIGNAL CABLES TO CONTROL VALVES CV 5105 AND CV 5115 ARE CONNECTED TO CONTROL PANELS CP 5120 AND 5130, RESPECTIVELY (SEE DWG P-510).

ISSUE	DATE	DESCRIPTION

PROJECT MANAGER	Andrew Staples
Design Manager	J. Zahller
Civil	J. Becker
Structural	M. Hijazi
Process	J. Zahller
Mechanical	K. Sutton
Electrical/Instrumentation	L. Kirmeyer / J. McReynolds
Contract No.	
PROJECT NUMBER	10367638

PROCESS: JEFFREY D. ZAHLLER, STATE OF WASHINGTON, 44824, REGISTERED PROFESSIONAL ENGINEER — PRELIMINARY — 12/07/23

INSTRUMENTATION: JOEL H. MCREYNOLDS, STATE OF WASHINGTON, 20100328, REGISTERED PROFESSIONAL ENGINEER — PRELIMINARY — 12/07/23

KITSAP COUNTY

CENTRAL KITSAP TREATMENT PLANT

PROCESS AND INSTRUMENTATION DIAGRAMS

SEPTAGE HANDLING STATION - 2

0 1" 2"

FILENAME

SCALE

SHEET P-511

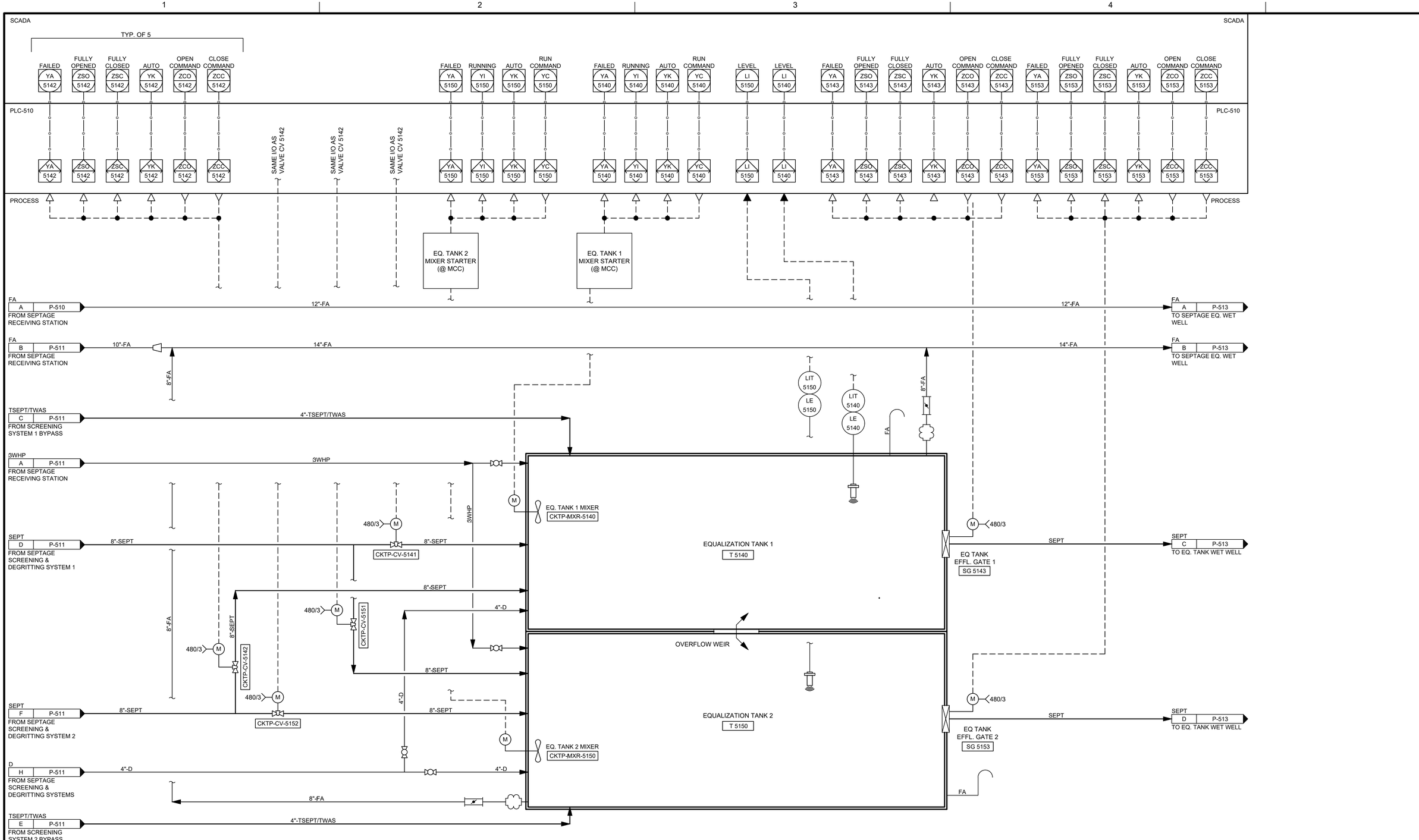

ISSUE	DATE	DESCRIPTION

PROJECT MANAGER	Andrew Staples
Design Manager	J. Zahller
Civil	J. Becker
Structural	M. Hijazi
Process	J. Zahller
Mechanical	K. Sutton
Electrical/Instrumentation	L. Kirmeyer / J. McReynolds
Contract No.	
PROJECT NUMBER	10367638

PROCESS: JEFFREY D. ZAHLLER, STATE OF WASHINGTON, 44824, REGISTERED PROFESSIONAL ENGINEER — PRELIMINARY — 12/07/23

INSTRUMENTATION: JOEL H. MCREYNOLDS, STATE OF WASHINGTON, 20100328, REGISTERED PROFESSIONAL ENGINEER — PRELIMINARY — 12/07/23

KITSAP COUNTY

CENTRAL KITSAP TREATMENT PLANT

PROCESS AND INSTRUMENTATION DIAGRAMS

SEPTAGE EQUALIZATION TANKS

0 1" 2"

FILENAME

SCALE

SHEET P-512

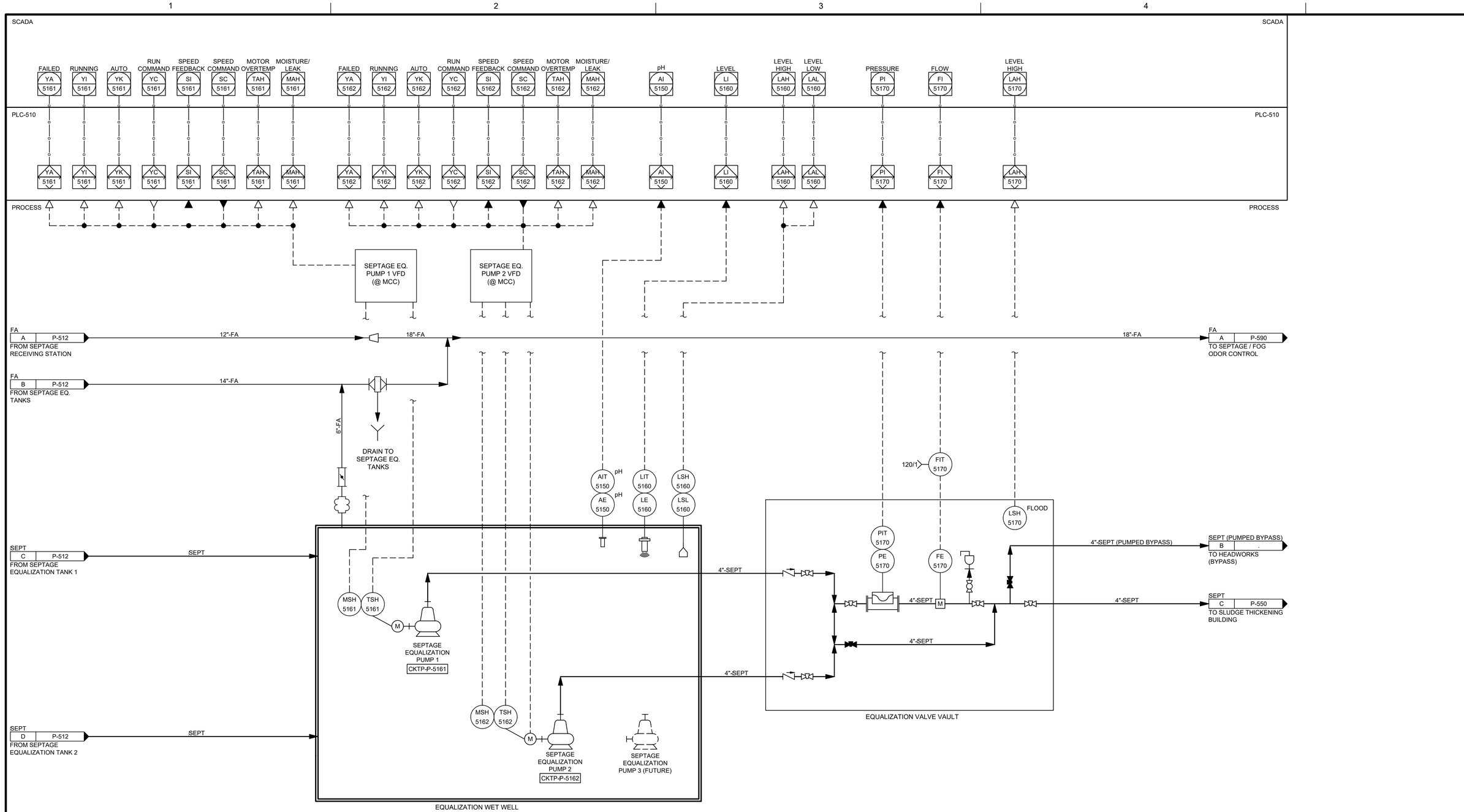

ISSUE	DATE	DESCRIPTION

PROJECT MANAGER	Andrew Staples
Design Manager	J. Zahller
Civil	J. Becker
Structural	M. Hijazi
Process	J. Zahller
Mechanical	K. Sutton
Electrical/Instrumentation	L. Kirmeyer / J. McReynolds
Contract No.	
PROJECT NUMBER	10367638

PROCESS: JEFFREY D. ZAHLLER, STATE OF WASHINGTON, 44824, REGISTERED PROFESSIONAL ENGINEER — PRELIMINARY — 12/07/23

INSTRUMENTATION: JOEL H. MCREYNOLDS, STATE OF WASHINGTON, 20100328, REGISTERED PROFESSIONAL ENGINEER — PRELIMINARY — 12/07/23

KITSAP COUNTY

CENTRAL KITSAP TREATMENT PLANT

PROCESS AND INSTRUMENTATION DIAGRAM

SEPTAGE EQUALIZATION TANKS PUMP WET WELL

0 1" 2"

FILENAME

SCALE

SHEET P-513

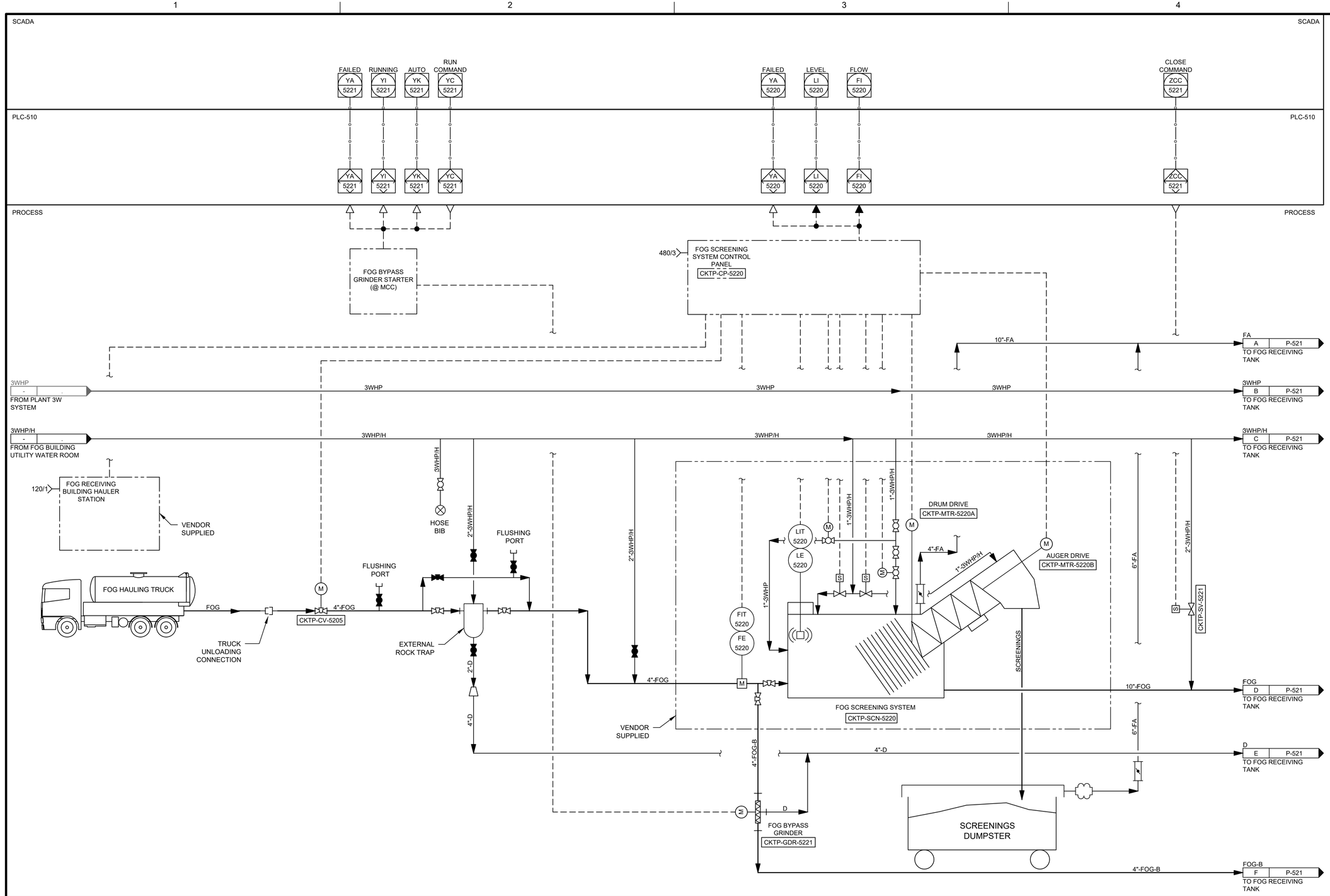

ISSUE	DATE	DESCRIPTION

PROJECT MANAGER	Andrew Staples
Design Manager	J. Zahller
Civil	J. Becker
Structural	M. Hijazi
Process	J. Zahller
Mechanical	K. Sutton
Electrical/Instrumentation	L. Kirmeyer / J. McReynolds
Contract No.	
PROJECT NUMBER	10367638

PROCESS: JEFFREY D. ZAHLLER, STATE OF WASHINGTON, 44824, REGISTERED PROFESSIONAL ENGINEER — PRELIMINARY — 12/07/23

INSTRUMENTATION: JOEL H. MCREYNOLDS, STATE OF WASHINGTON, 20100328, REGISTERED PROFESSIONAL ENGINEER — PRELIMINARY — 12/07/23

KITSAP COUNTY

CENTRAL KITSAP TREATMENT PLANT

PROCESS AND INSTRUMENTATION DIAGRAMS

FOG HANDLING STATION - 1

0 1" 2"

FILENAME

SCALE

SHEET P-520

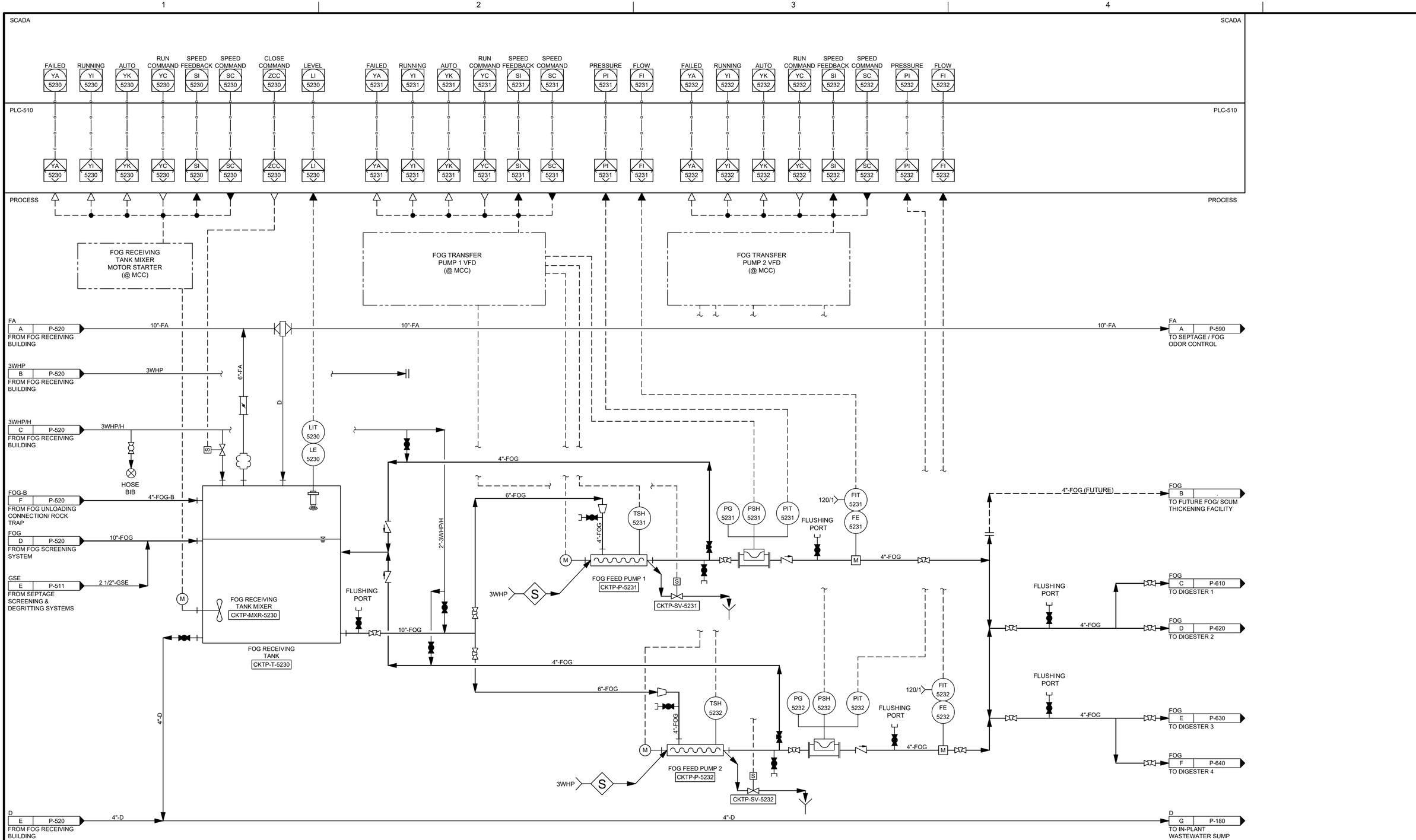

ISSUE	DATE	DESCRIPTION

PROJECT MANAGER	Andrew Staples
Design Manager	J. Zahller
Civil	J. Becker
Structural	M. Hijazi
Process	J. Zahller
Mechanical	K. Sutton
Electrical/Instrumentation	L. Kirmeyer / J. McReynolds
Contract No.	
PROJECT NUMBER	10367638

PROCESS: JEFFREY D. ZAHLLER, STATE OF WASHINGTON, 44824, REGISTERED PROFESSIONAL ENGINEER — PRELIMINARY — 12/07/23

INSTRUMENTATION: JOEL H. MCREYNOLDS, STATE OF WASHINGTON, 20100328, REGISTERED PROFESSIONAL ENGINEER — PRELIMINARY — 12/07/23

KITSAP COUNTY

CENTRAL KITSAP TREATMENT PLANT

PROCESS AND INSTRUMENTATION DIAGRAMS

FOG HANDLING STATION - 2

0 1" 2"

FILENAME

SCALE

SHEET P-521

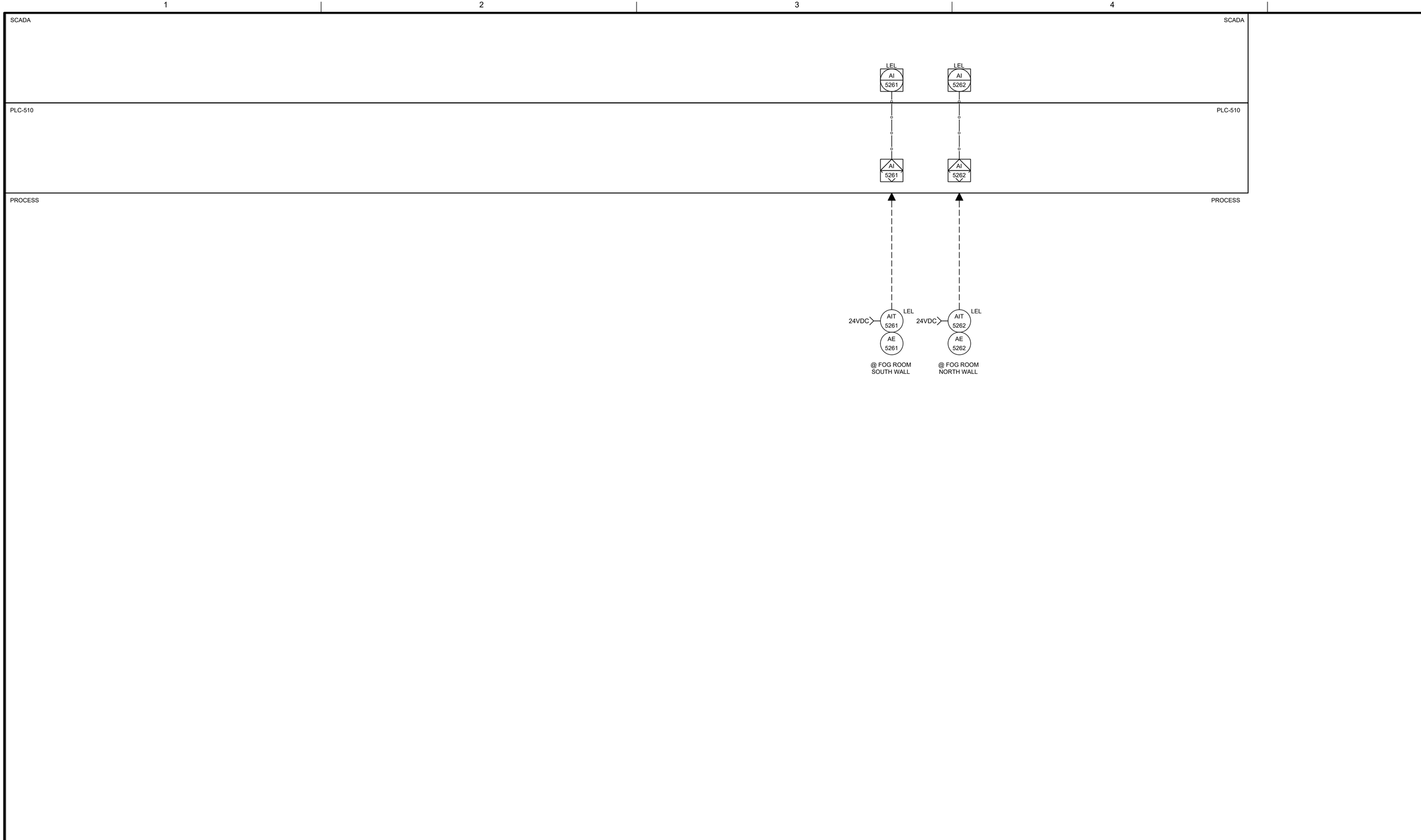

ISSUE	DATE	DESCRIPTION

PROJECT MANAGER	**Andrew Staples**
Design Manager	**J. Zahller**
Civil	**J. Becker**
Structural	**M. Hijazi**
Process	**J. Zahller**
Mechanical	**K. Sutton**
Electrical/Instrumentation	**L. Kirmeyer / J. McReynolds**
Contract No.	
PROJECT NUMBER	**10367638**

PROCESS:

JEFFREY D. ZAHLLER
STATE OF WASHINGTON
44824
REGISTERED
PROFESSIONAL ENGINEER
PRELIMINARY
12/07/23

INSTRUMENTATION:

JOEL H. MCREYNOLDS
STATE OF WASHINGTON
20100328
REGISTERED
PROFESSIONAL ENGINEER
PRELIMINARY
12/07/23

KITSAP COUNTY

CENTRAL KITSAP TREATMENT PLANT

PROCESS AND INSTRUMENTATION DIAGRAMS

FOG RECEIVING BUILDING MONITORING

0 1" 2"

FILENAME	
SCALE	

SHEET
P-526

GENERAL NOTES:

1. ALL ETHERNET SWITCHES TO BE MANAGED, WITH SEPARATE VLANS SET UP FOR NETWORK MANAGEMENT, POWER MONITORING, AND CONTROL NETWORKS. ENSURE THAT EACH DEVICE IS CONNECTED TO THE APPROPRIATE VLAN.

KEYNOTES: (X)

1. ITEMS ON THIS NETWORK ARE TO BE CONNECTED IN A FAULT TOLERANT DEVICE-LEVEL RING SUCH THAT THE FAILURE OF ANY SINGLE DEVICE WILL STILL ALLOW ALL OTHER DEVICES TO CONTINUE TO COMMUNICATE NORMALLY.
2. EQUIPMENT PROVIDED BY VENDOR. SEE VENDOR SPECIFICATION FOR DETAILS.

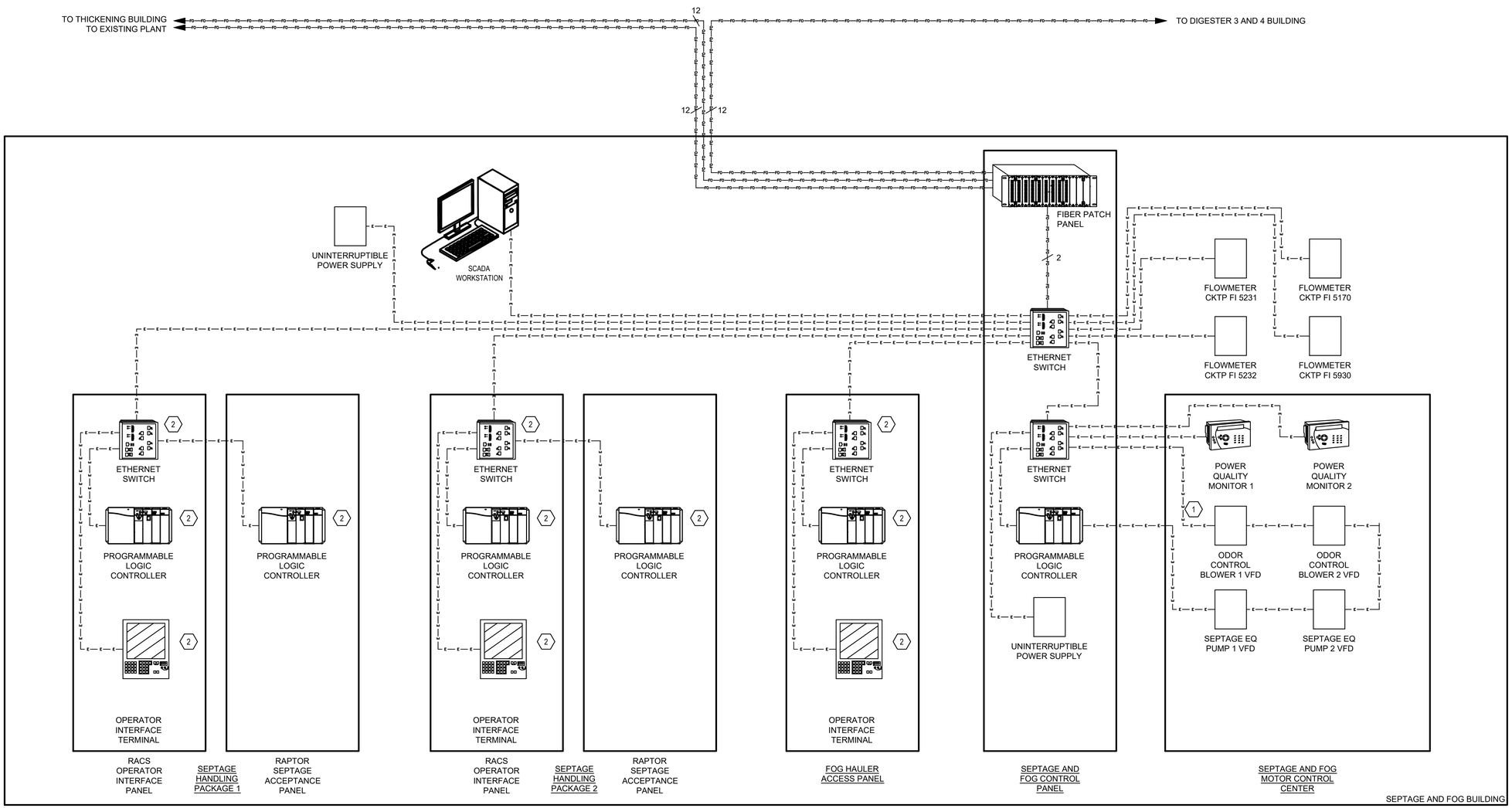

LEGEND

- CAT 6 CABLE
- FIBER OPTIC
- SERIAL CABLE
- # OR # — NUMBER OF FIBER OPTIC STRANDS
- EQUIPMENT AND STRUCTURES INSTALLED UNDER THIS CONTRACT
- EXISTING EQUIPMENT AND STRUCTURES

ISSUE	DATE	DESCRIPTION

PROJECT MANAGER	Andrew Staples
Design Manager	J. Zahller
Civil	J. Becker
Structural	M. Hijazi
Process	J. Zahller
Mechanical	K. Sutton
Electrical/Instrumentation	L. Kirmeyer / J. McReynolds
Contract No.	
PROJECT NUMBER	10367638

PROCESS: JEFFREY D. ZAHLLER, STATE OF WASHINGTON, 44824, REGISTERED PROFESSIONAL ENGINEER — PRELIMINARY — 12/07/23

INSTRUMENTATION: JOELLE MCREYNOLDS, STATE OF WASHINGTON, 20100328, REGISTERED PROFESSIONAL ENGINEER — PRELIMINARY — 12/07/23

KITSAP COUNTY

CENTRAL KITSAP TREATMENT PLANT

PROCESS AND INSTRUMENTATION DIAGRAM

SEPTAGE AND FOG RECEIVING NETWORK DIAGRAM

0 1" 2"

FILENAME

SCALE

SHEET P-528

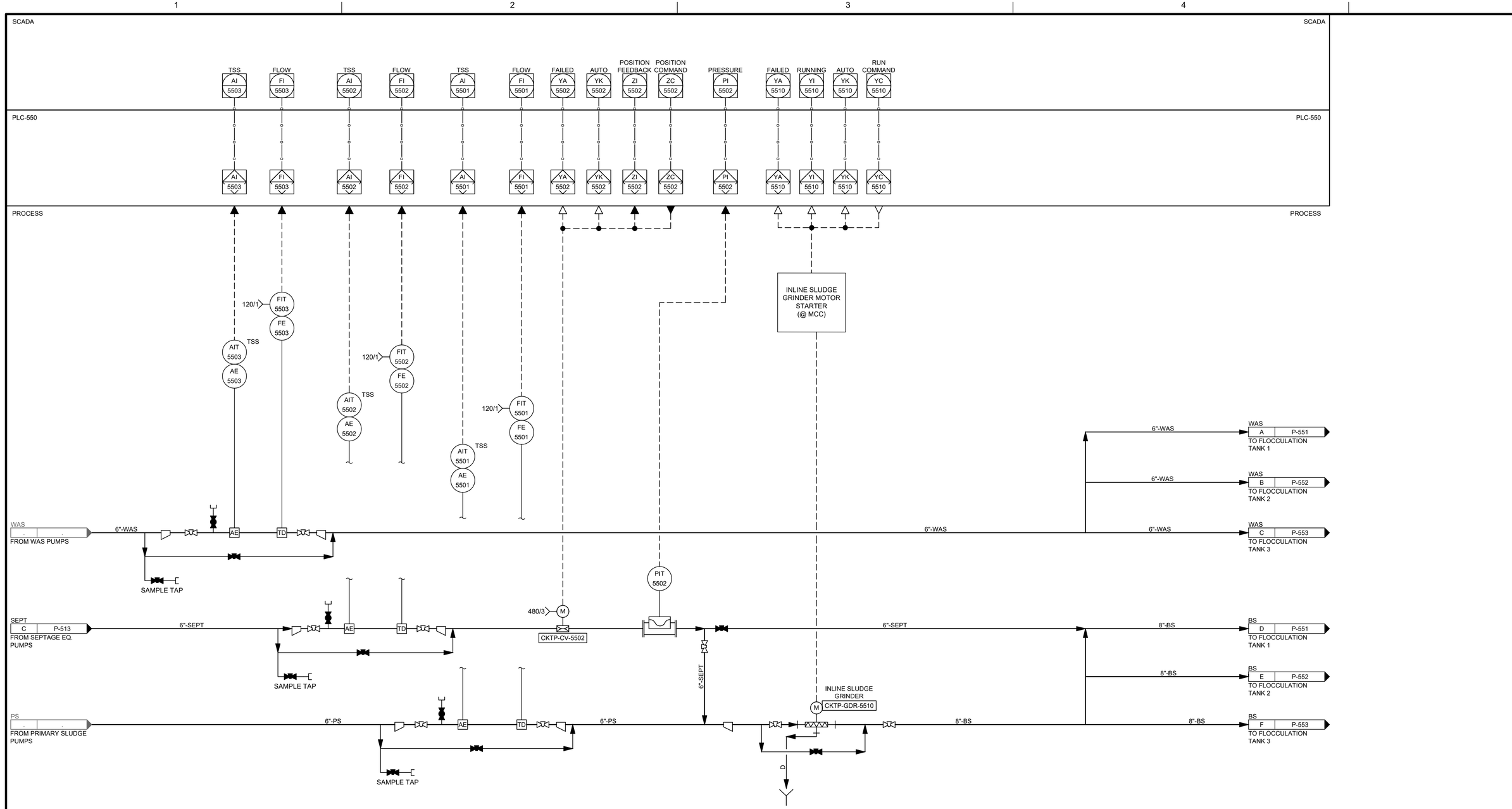

ISSUE	DATE	DESCRIPTION

PROJECT MANAGER	Andrew Staples
Design Manager	J. Zahller
Civil	J. Becker
Structural	M. Hijazi
Process	J. Zahller
Mechanical	K. Sutton
Electrical/Instrumentation	L. Kirmeyer / J. McReynolds
Contract No.	
PROJECT NUMBER	10367638

PROCESS:

JEFFREY D. ZAHLLER STATE OF WASHINGTON 44824 REGISTERED PROFESSIONAL ENGINEER PRELIMINARY 12/07/23

INSTRUMENTATION:

JOEL H. MCREYNOLDS STATE OF WASHINGTON 20100328 REGISTERED PROFESSIONAL ENGINEER PRELIMINARY 12/07/23

KITSAP COUNTY

CENTRAL KITSAP TREATMENT PLANT

PROCESS AND INSTRUMENTATION DIAGRAMS

SLUDGE THICKENING BUILDING INFLUENT FLOW METERS

0 1" 2"

FILENAME

SCALE

SHEET P-550

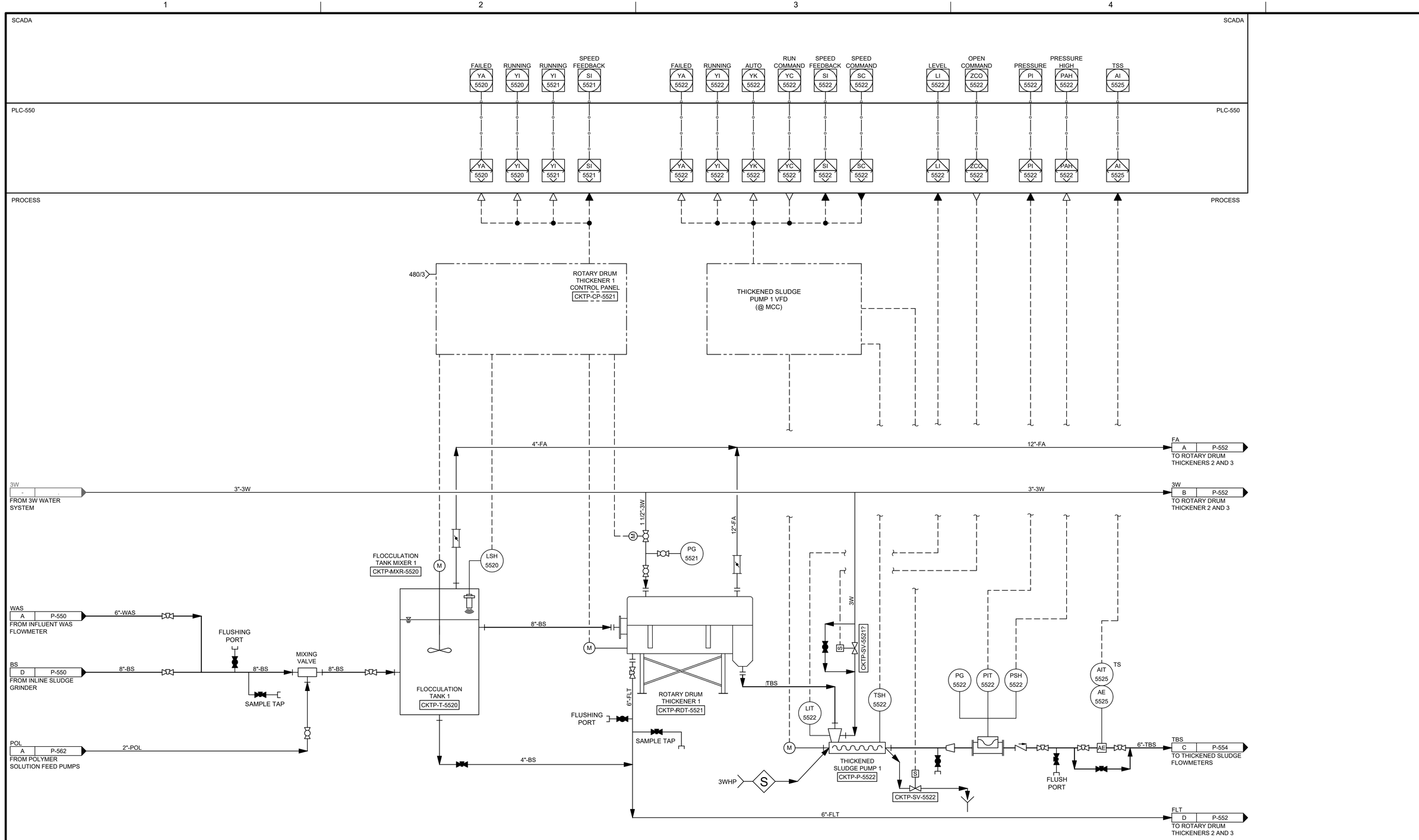

ISSUE	DATE	DESCRIPTION

PROJECT MANAGER	**Andrew Staples**
Design Manager	**J. Zahller**
Civil	**J. Becker**
Structural	**M. Hijazi**
Process	**J. Zahller**
Mechanical	**K. Sutton**
Electrical/Instrumentation	**L. Kirmeyer / J. McReynolds**
Contract No.	
PROJECT NUMBER	**10367638**

PROCESS:

JEFFREY D. ZAHLLER — STATE OF WASHINGTON — 44824 — REGISTERED PROFESSIONAL ENGINEER

PRELIMINARY 12/07/23

INSTRUMENTATION:

JOELLA MCREYNOLDS — STATE OF WASHINGTON — 20100328 — REGISTERED PROFESSIONAL ENGINEER

PRELIMINARY 12/07/23

KITSAP COUNTY

CENTRAL KITSAP TREATMENT PLANT

PROCESS AND INSTRUMENTATION DIAGRAMS

PRIMARY SLUDGE / SEPTAGE THICKENER 1

0 1" 2"

FILENAME

SCALE

SHEET **P-551**

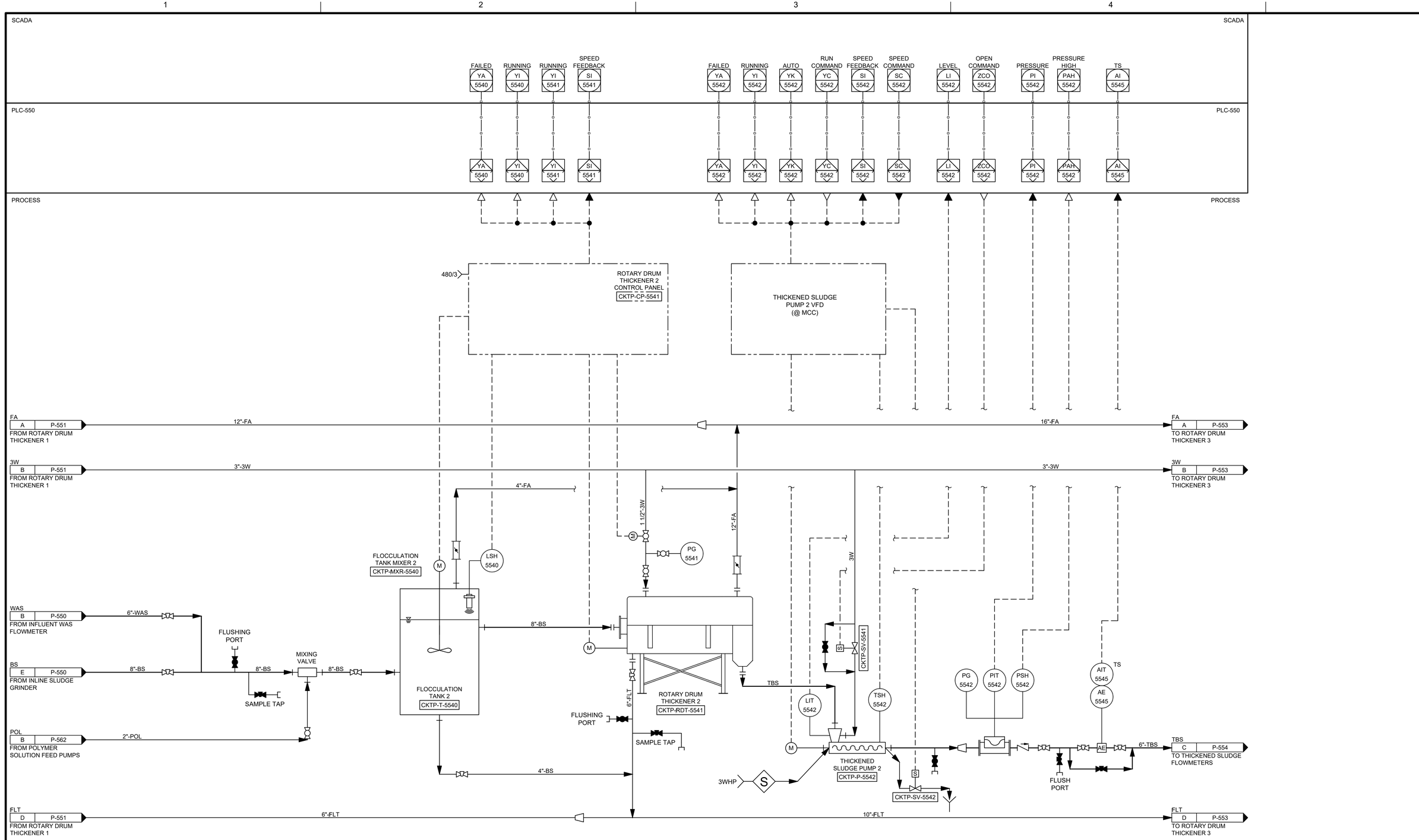

ISSUE	DATE	DESCRIPTION

PROJECT MANAGER	Andrew Staples
Design Manager	J. Zahller
Civil	J. Becker
Structural	M. Hijazi
Process	J. Zahller
Mechanical	K. Sutton
Electrical/Instrumentation	L. Kirmeyer / J. McReynolds
Contract No.	
PROJECT NUMBER	10367638

PROCESS: JEFFREY D. ZAHLLER, STATE OF WASHINGTON, 44824, REGISTERED PROFESSIONAL ENGINEER — PRELIMINARY — 12/07/23

INSTRUMENTATION: JOEL H. MCREYNOLDS, STATE OF WASHINGTON, 20100328, REGISTERED PROFESSIONAL ENGINEER — PRELIMINARY — 12/07/23

KITSAP COUNTY

CENTRAL KITSAP TREATMENT PLANT

PROCESS AND INSTRUMENTATION DIAGRAMS

PRIMARY SLUDGE / SEPTAGE THICKENER 2

0 1" 2"

FILENAME

SCALE

SHEET P-552

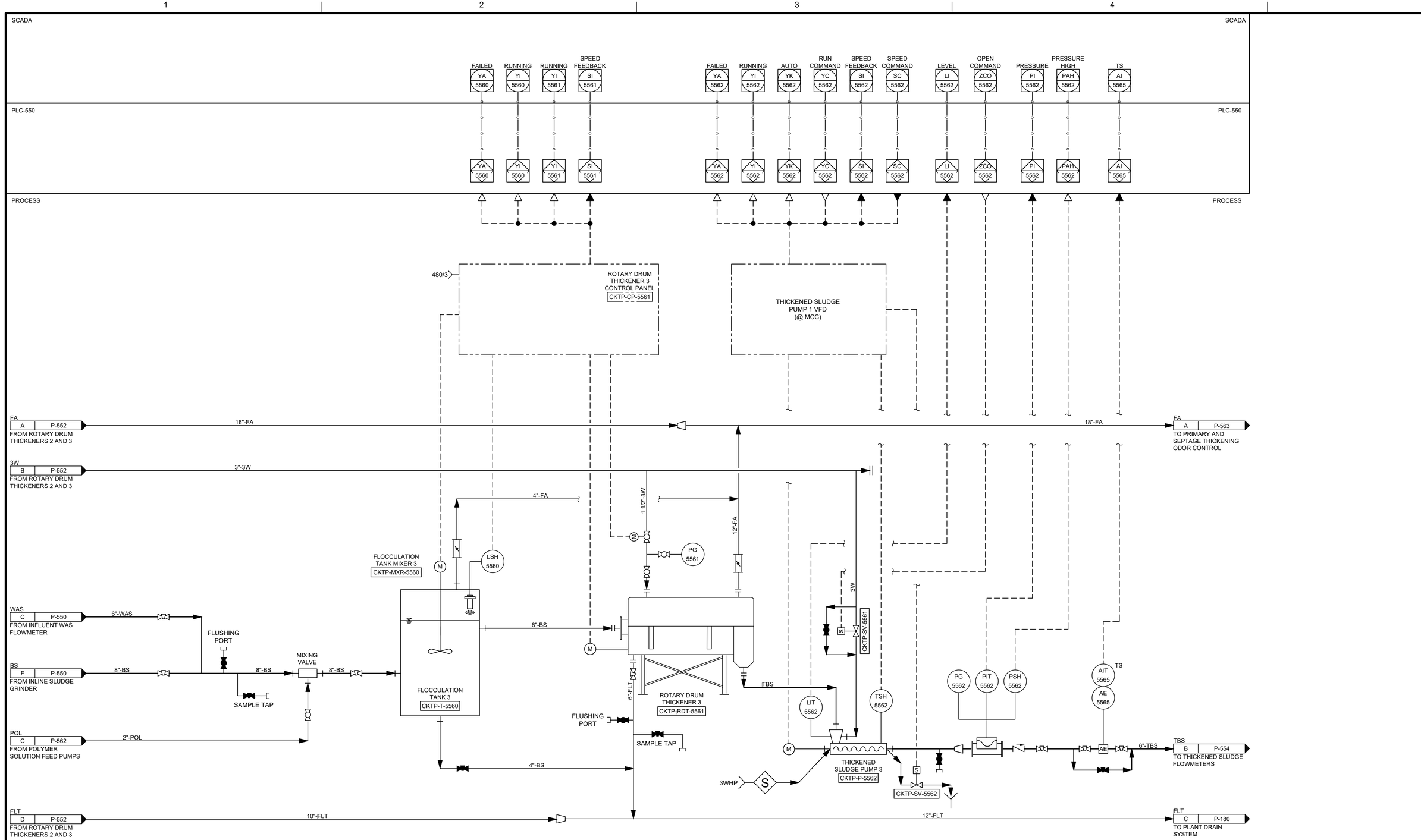

ISSUE	DATE	DESCRIPTION

PROJECT MANAGER	Andrew Staples
Design Manager	J. Zahller
Civil	J. Becker
Structural	M. Hijazi
Process	J. Zahller
Mechanical	K. Sutton
Electrical/Instrumentation	L. Kirmeyer / J. McReynolds
Contract No.	
PROJECT NUMBER	10367638

PROCESS: JEFFREY D. ZAHLLER, STATE OF WASHINGTON, 44824, REGISTERED PROFESSIONAL ENGINEER — PRELIMINARY — 12/07/23

INSTRUMENTATION: JOEL H. MCREYNOLDS, STATE OF WASHINGTON, 20100328, REGISTERED PROFESSIONAL ENGINEER — PRELIMINARY — 12/07/23

KITSAP COUNTY

CENTRAL KITSAP TREATMENT PLANT

PROCESS AND INSTRUMENTATION DIAGRAMS

PRIMARY SLUDGE / SEPTAGE THICKENER 3

0 1" 2"

FILENAME

SCALE

SHEET P-553

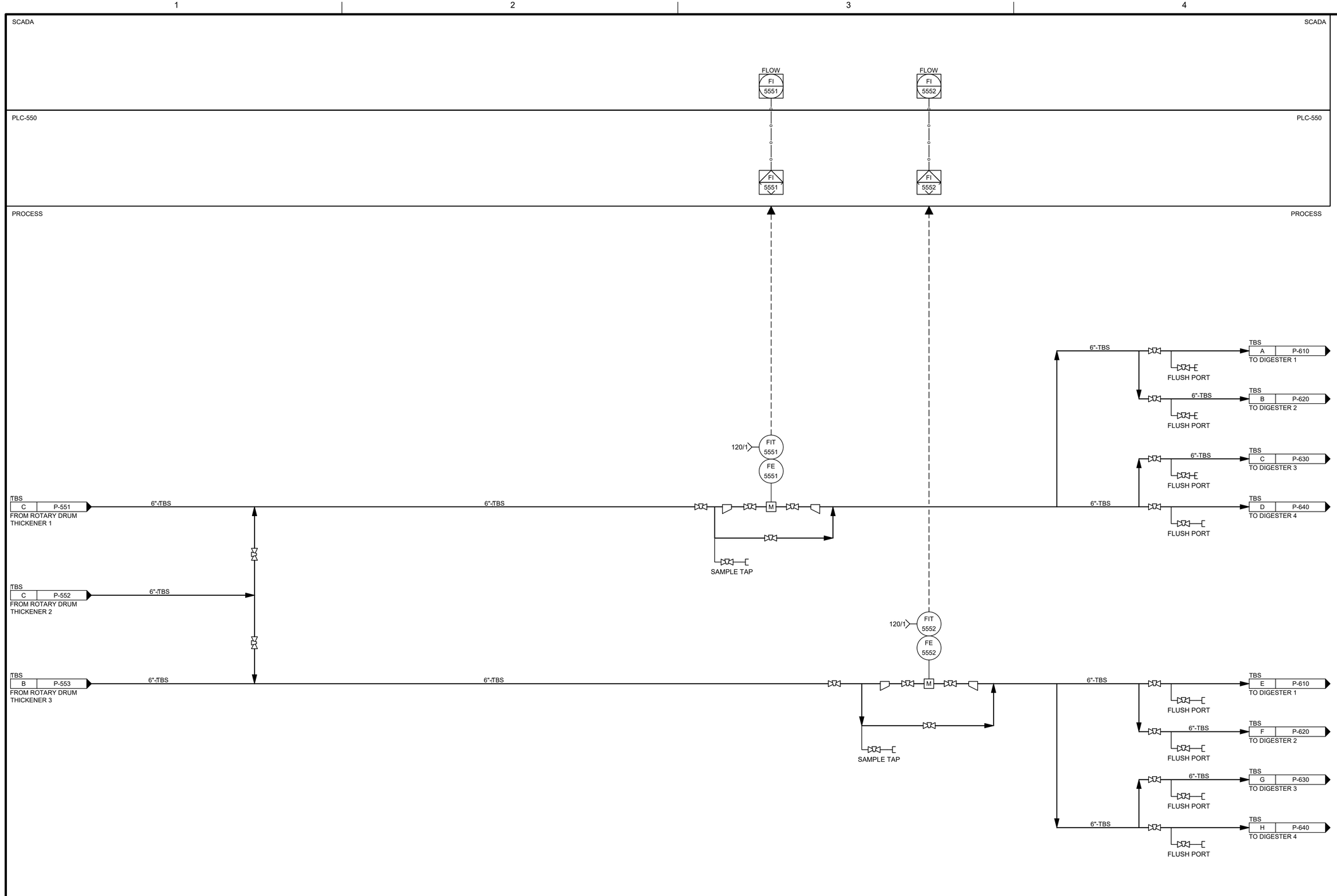

ISSUE	DATE	DESCRIPTION

PROJECT MANAGER	**Andrew Staples**
Design Manager	**J. Zahller**
Civil	**J. Becker**
Structural	**M. Hijazi**
Process	**J. Zahller**
Mechanical	**K. Sutton**
Electrical/Instrumentation	**L. Kirmeyer / J. McReynolds**
Contract No.	
PROJECT NUMBER	**10367638**

PROCESS:

JEFFREY D. ZAHLLER — STATE OF WASHINGTON — 44824 — REGISTERED PROFESSIONAL ENGINEER

PRELIMINARY

12/07/23

INSTRUMENTATION:

JOEL H. MCREYNOLDS — STATE OF WASHINGTON — 20100328 — REGISTERED PROFESSIONAL ENGINEER

PRELIMINARY

12/07/23

KITSAP COUNTY

CENTRAL KITSAP TREATMENT PLANT

PROCESS AND INSTRUMENTATION DIAGRAMS

PRIMARY AND SEPTAGE THICKENING BUILDING EFFLUENT FLOW METERS

0 1" 2"

FILENAME

SCALE

SHEET

P-554

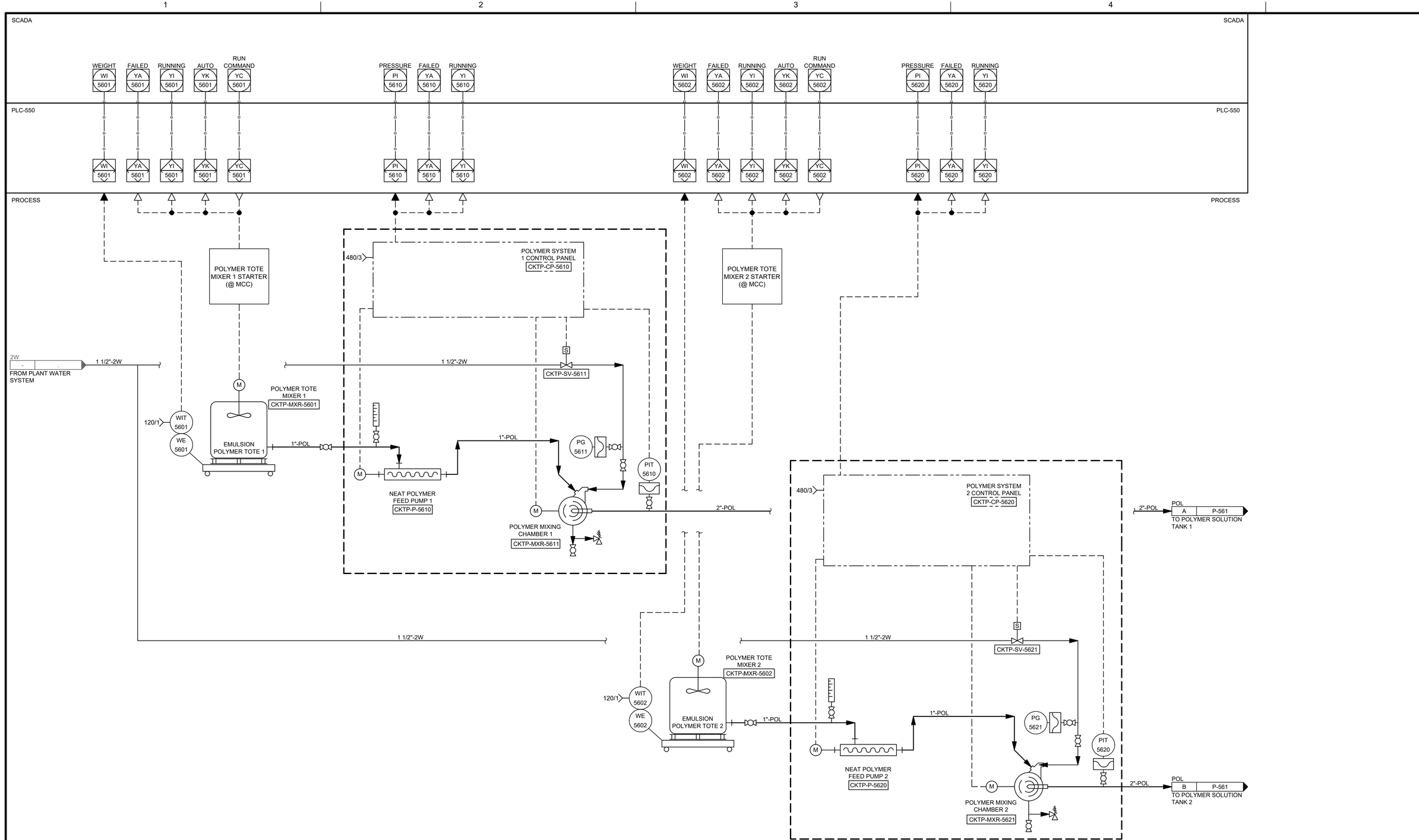

ISSUE	DATE	DESCRIPTION

PROJECT MANAGER	Andrew Staples
Design Manager	J. Zahller
Civil	J. Becker
Structural	M. Hijazi
Process	J. Zahller
Mechanical	K. Sutton
Electrical/Instrumentation	L. Kirmeyer / J. McReynolds
Contract No.	
PROJECT NUMBER	10367638

PROCESS:

JEFFREY D. ZAHLLER — STATE OF WASHINGTON — 44824 — REGISTERED PROFESSIONAL ENGINEER — PRELIMINARY — 12/07/23

INSTRUMENTATION:

JOEL H. MCREYNOLDS — STATE OF WASHINGTON — 20100328 — REGISTERED PROFESSIONAL ENGINEER — PRELIMINARY — 12/07/23

KITSAP COUNTY

CENTRAL KITSAP TREATMENT PLANT

PROCESS AND INSTRUMENTATION DIAGRAMS

PRIMARY SLUDGE / SEPTAGE POLYMER SYSTEM - 1

0 1" 2"

FILENAME

SCALE

SHEET P-560

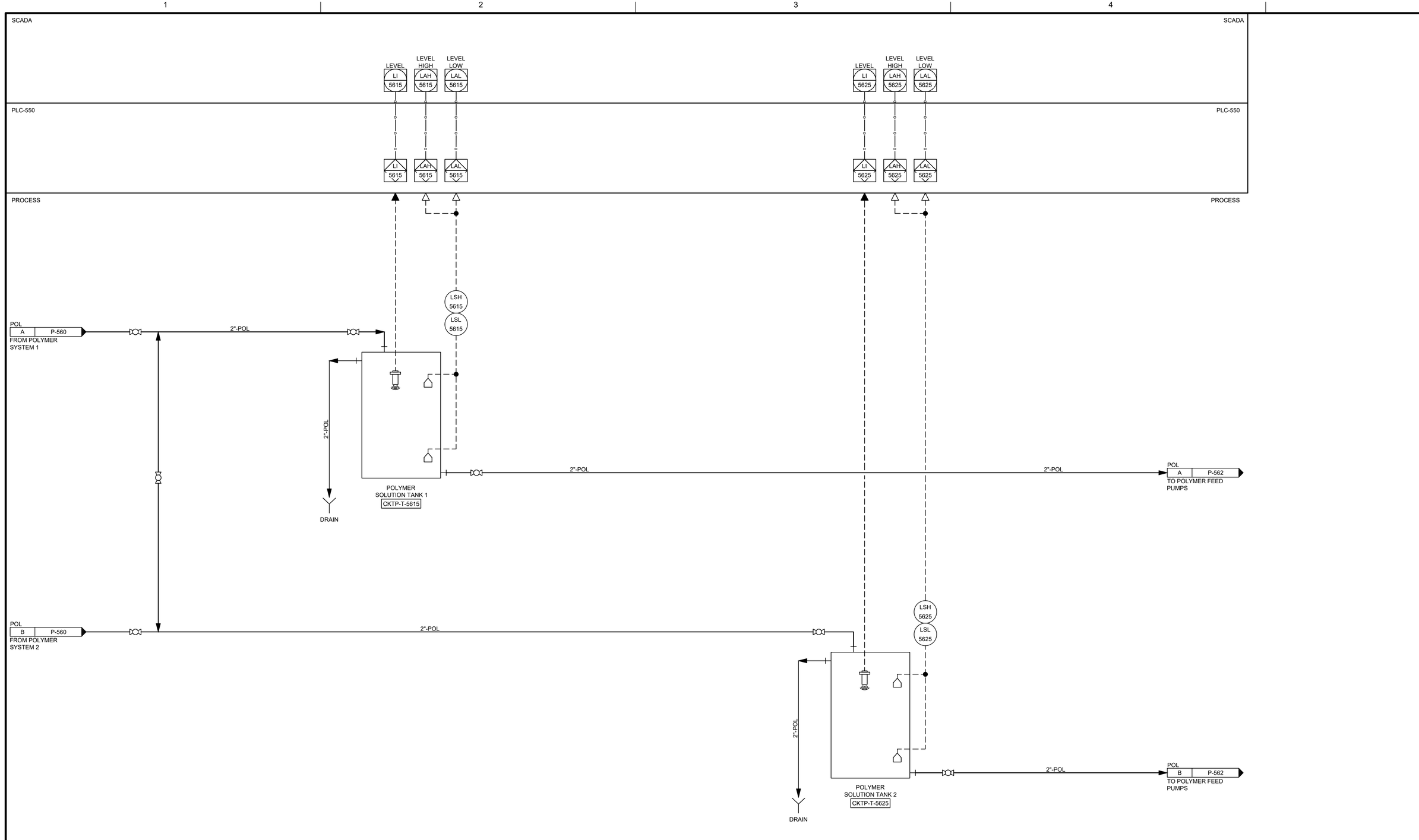

ISSUE	DATE	DESCRIPTION

PROJECT MANAGER	**Andrew Staples**
Design Manager	**J. Zahller**
Civil	**J. Becker**
Structural	**M. Hijazi**
Process	**J. Zahller**
Mechanical	**K. Sutton**
Electrical/Instrumentation	**L. Kirmeyer / J. McReynolds**
Contract No.	
PROJECT NUMBER	**10367638**

PROCESS:

JEFFREY D. ZAHLLER STATE OF WASHINGTON 44824 REGISTERED PROFESSIONAL ENGINEER

PRELIMINARY

12/07/23

INSTRUMENTATION:

JOEL H. MCREYNOLDS STATE OF WASHINGTON 20100328 REGISTERED PROFESSIONAL ENGINEER

PRELIMINARY

12/07/23

KITSAP COUNTY

CENTRAL KITSAP TREATMENT PLANT

PROCESS AND INSTRUMENTATION DIAGRAMS

PRIMARY SLUDGE / SEPTAGE POLYMER SYSTEM - 2

0 1" 2"

FILENAME

SCALE

SHEET

P-561

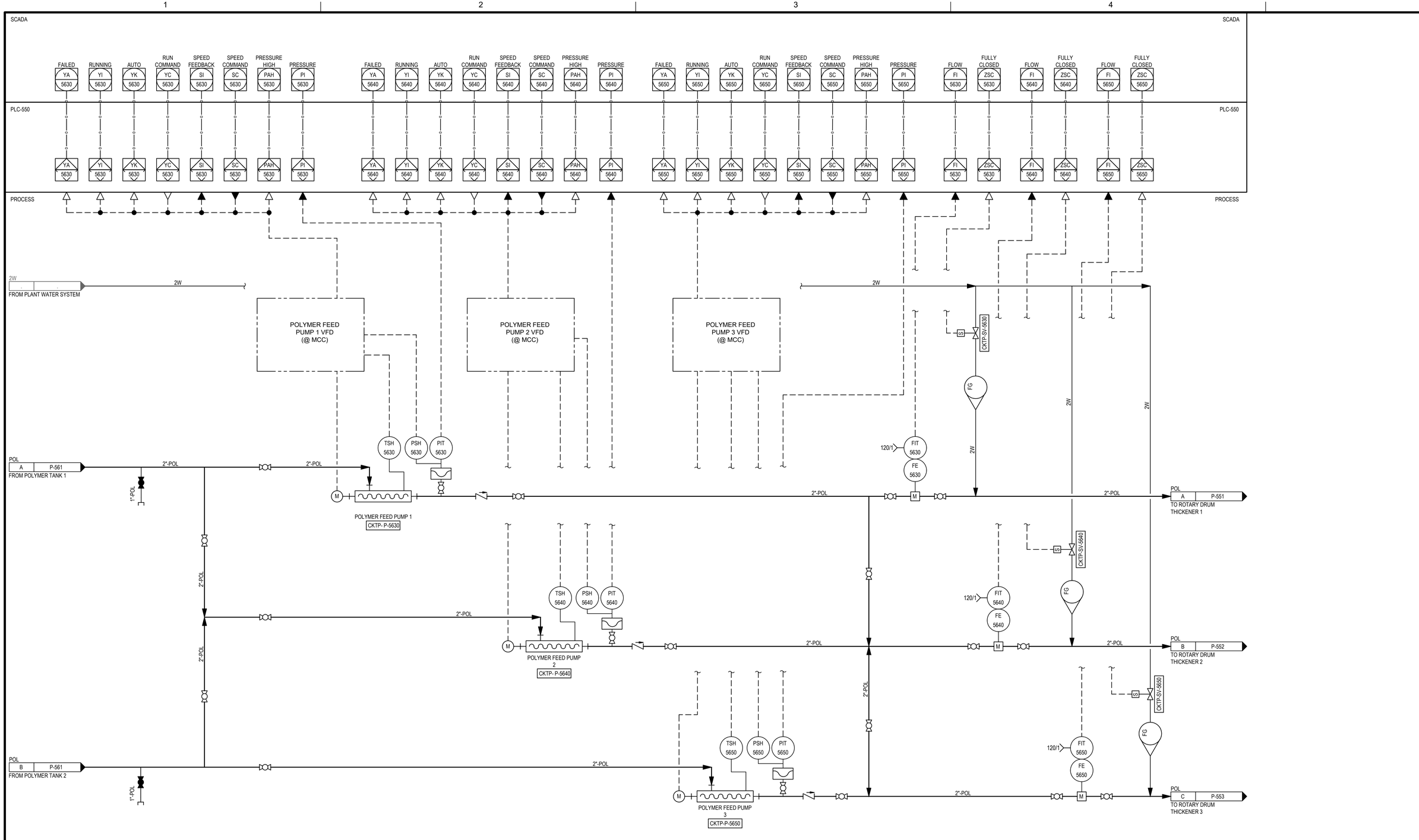

ISSUE	DATE	DESCRIPTION

PROJECT MANAGER	Andrew Staples
Design Manager	J. Zahller
Civil	J. Becker
Structural	M. Hijazi
Process	J. Zahller
Mechanical	K. Sutton
Electrical/Instrumentation	L. Kirmeyer / J. McReynolds
Contract No.	
PROJECT NUMBER	10367638

PROCESS:

JEFFREY D. ZAHLLER STATE OF WASHINGTON 44824 REGISTERED PROFESSIONAL ENGINEER
PRELIMINARY
12/07/23

INSTRUMENTATION:

JOEL H. MCREYNOLDS STATE OF WASHINGTON 20100328 REGISTERED PROFESSIONAL ENGINEER
PRELIMINARY
12/07/23

KITSAP COUNTY

CENTRAL KITSAP TREATMENT PLANT

PROCESS AND INSTRUMENTATION DIAGRAMS

PRIMARY SLUDGE / SEPTAGE POLYMER SYSTEM - 3

0 1" 2"

FILENAME	
SCALE	

SHEET P-562

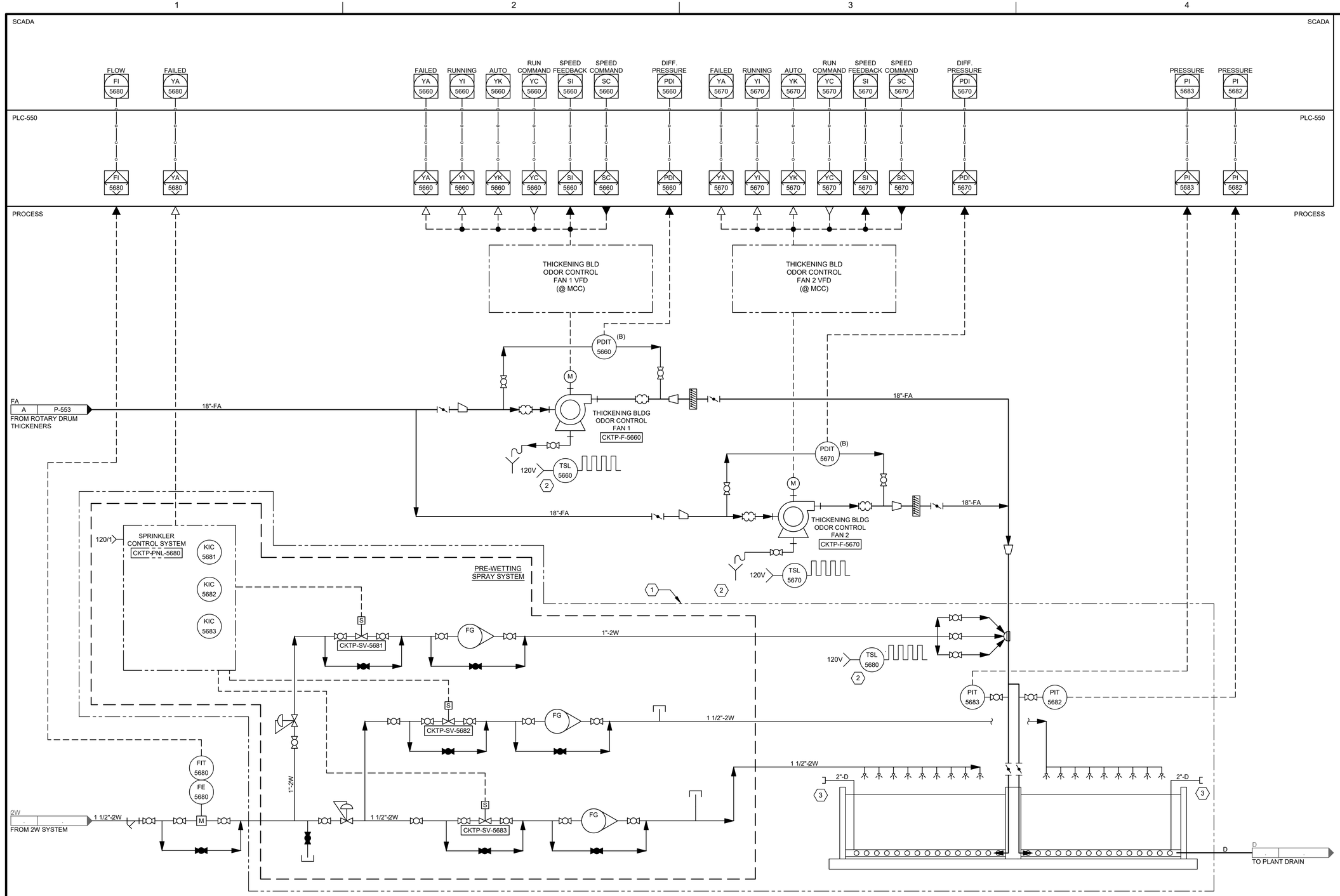

GENERAL NOTES:

1. (B) DENOTES INSTRUMENTATION PROVIDED BY FAN VENDOR.

KEYNOTES:

1. ITEMS WITHIN THE DASHED AREA ARE TO BE PROVIDED BY THE BIOFILTER SUPPLIER, SEE SPECIFICATION 44 31 21.
2. HEAT TRACE AND INSULATE MAIN ODOR CONTROL FAN DRAINS TO BE ROUTED TO BIOFILTER. DUCT DRAINS TO BE ROUTED TO THE NEAREST FLOOR DRAIN.
3. FLUSH PORT. TYPICAL ON EACH AIR DISTRIBUTION LATERAL.

ISSUE	DATE	DESCRIPTION

PROJECT MANAGER	Andrew Staples
Design Manager	J. Zahller
Civil	J. Becker
Structural	M. Hijazi
Process	J. Zahller
Mechanical	K. Sutton
Electrical/Instrumentation	L. Kirmeyer / J. McReynolds
Contract No.	
PROJECT NUMBER	10367638

PROCESS: PRELIMINARY 12/07/23

INSTRUMENTATION: PRELIMINARY 12/07/23

KITSAP COUNTY

CENTRAL KITSAP TREATMENT PLANT

PROCESS AND INSTRUMENTATION DIAGRAMS

PRIMARY AND SEPTAGE THICKENING ODOR CONTROL

0 1" 2"

FILENAME

SCALE

SHEET P-563

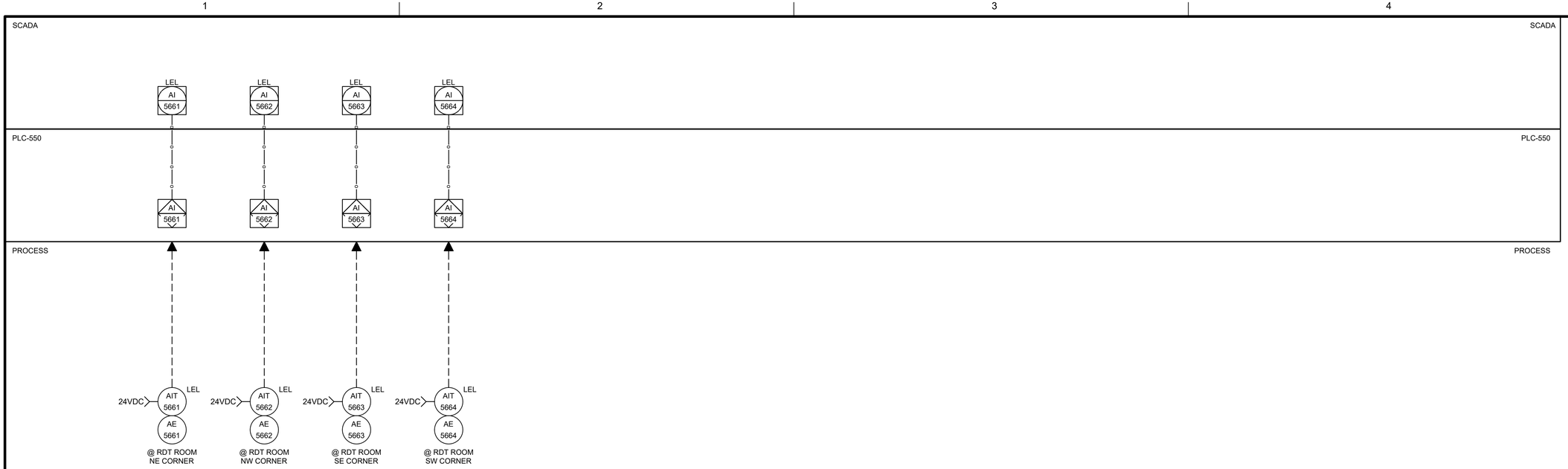

ISSUE	DATE	DESCRIPTION

PROJECT MANAGER	**Andrew Staples**
Design Manager	**J. Zahller**
Civil	**J. Becker**
Structural	**M. Hijazi**
Process	**J. Zahller**
Mechanical	**K. Sutton**
Electrical/Instrumentation	**L. Kirmeyer / J. McReynolds**
Contract No.	
PROJECT NUMBER	**10367638**

PROCESS:

JEFFREY D. ZAHLLER
STATE OF WASHINGTON
44824
REGISTERED
PROFESSIONAL ENGINEER
PRELIMINARY
12/07/23

INSTRUMENTATION:

JOEL H. MCREYNOLDS
STATE OF WASHINGTON
20100328
REGISTERED
PROFESSIONAL ENGINEER
PRELIMINARY
12/07/23

KITSAP COUNTY

CENTRAL KITSAP TREATMENT PLANT

PROCESS AND INSTRUMENTATION DIAGRAMS

PRIMARY AND SEPTAGE THICKENING BUILDING MONITORING

0 1" 2"

FILENAME	
SCALE	

SHEET
P-566

GENERAL NOTES:

1. ALL ETHERNET SWITCHES TO BE MANAGED, WITH SEPARATE VLANS SET UP FOR NETWORK MANAGEMENT, POWER MONITORING, AND CONTROL NETWORKS. ENSURE THAT EACH DEVICE IS CONNECTED TO THE APPROPRIATE VLAN.

KEYNOTES: (X)

1. ITEMS ON THIS NETWORK ARE TO BE CONNECTED IN A FAULT TOLERANT DEVICE-LEVEL RING SUCH THAT THE FAILURE OF ANY SINGLE DEVICE WILL STILL ALLOW ALL OTHER DEVICES TO CONTINUE TO COMMUNICATE NORMALLY.
2. EQUIPMENT PROVIDED BY VENDOR. SEE VENDOR SPECIFICATION FOR DETAILS.

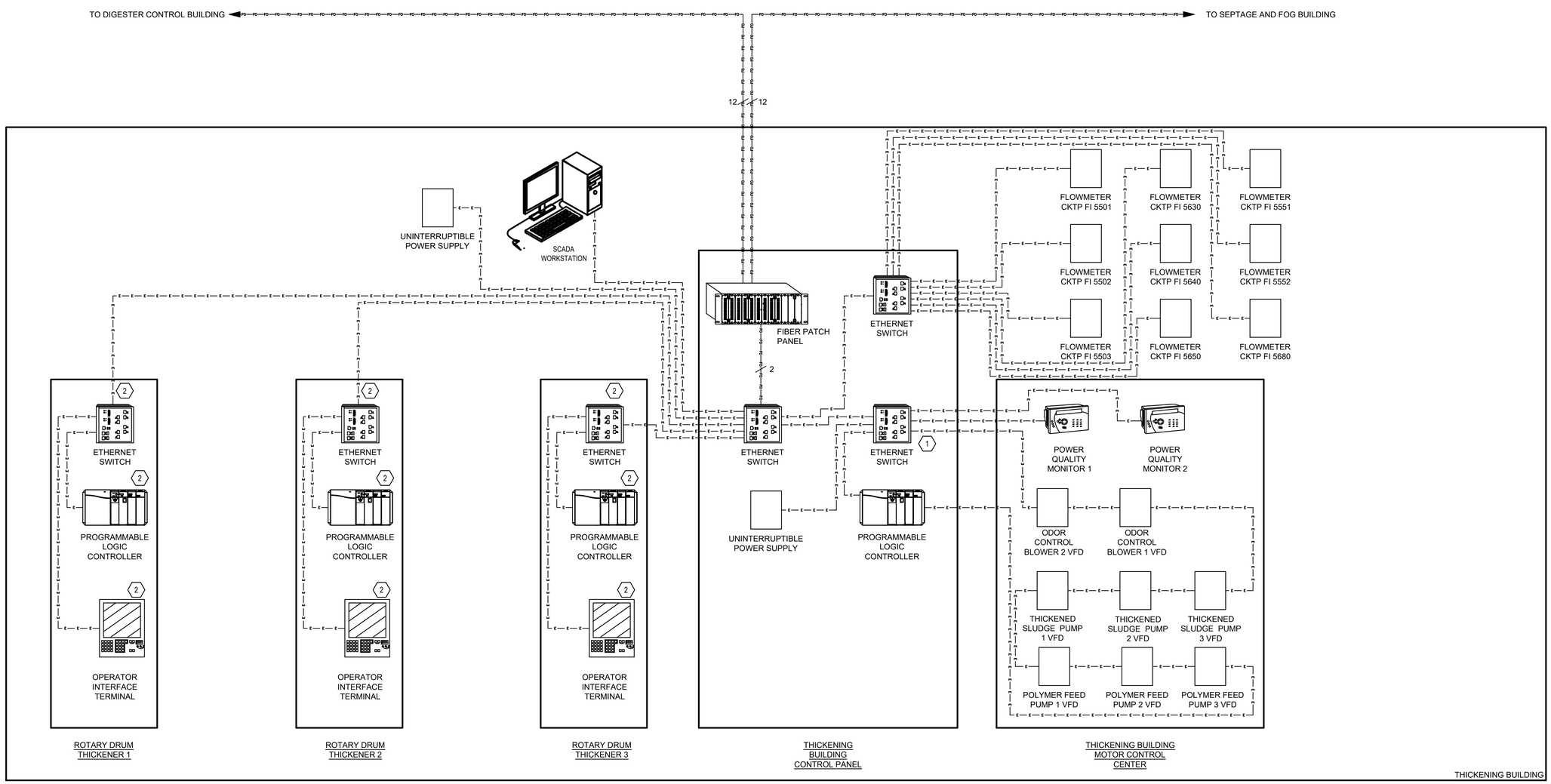

LEGEND

- CAT 6 CABLE
- FIBER OPTIC
- SERIAL CABLE
- # OR # — NUMBER OF FIBER OPTIC STRANDS
- EQUIPMENT AND STRUCTURES INSTALLED UNDER THIS CONTRACT
- EXISTING EQUIPMENT AND STRUCTURES

ISSUE	DATE	DESCRIPTION

PROJECT MANAGER	Andrew Staples
Design Manager	J. Zahller
Civil	J. Becker
Structural	M. Hijazi
Process	J. Zahller
Mechanical	K. Sutton
Electrical/Instrumentation	L. Kirmeyer / J. McReynolds
Contract No.	
PROJECT NUMBER	10367638

PROCESS: JEFFREY D. ZAHLLER, STATE OF WASHINGTON, 44824, REGISTERED PROFESSIONAL ENGINEER — PRELIMINARY — 12/07/23

INSTRUMENTATION: JOEL H. MCREYNOLDS, STATE OF WASHINGTON, 20100328, REGISTERED PROFESSIONAL ENGINEER — PRELIMINARY — 12/07/23

KITSAP COUNTY

CENTRAL KITSAP TREATMENT PLANT

PROCESS AND INSTRUMENTATION DIAGRAM

PRIMARY AND SEPTAGE THICKENING BLGD NETWORK DIAGRAM

0 1" 2"

FILENAME

SCALE

SHEET P-568

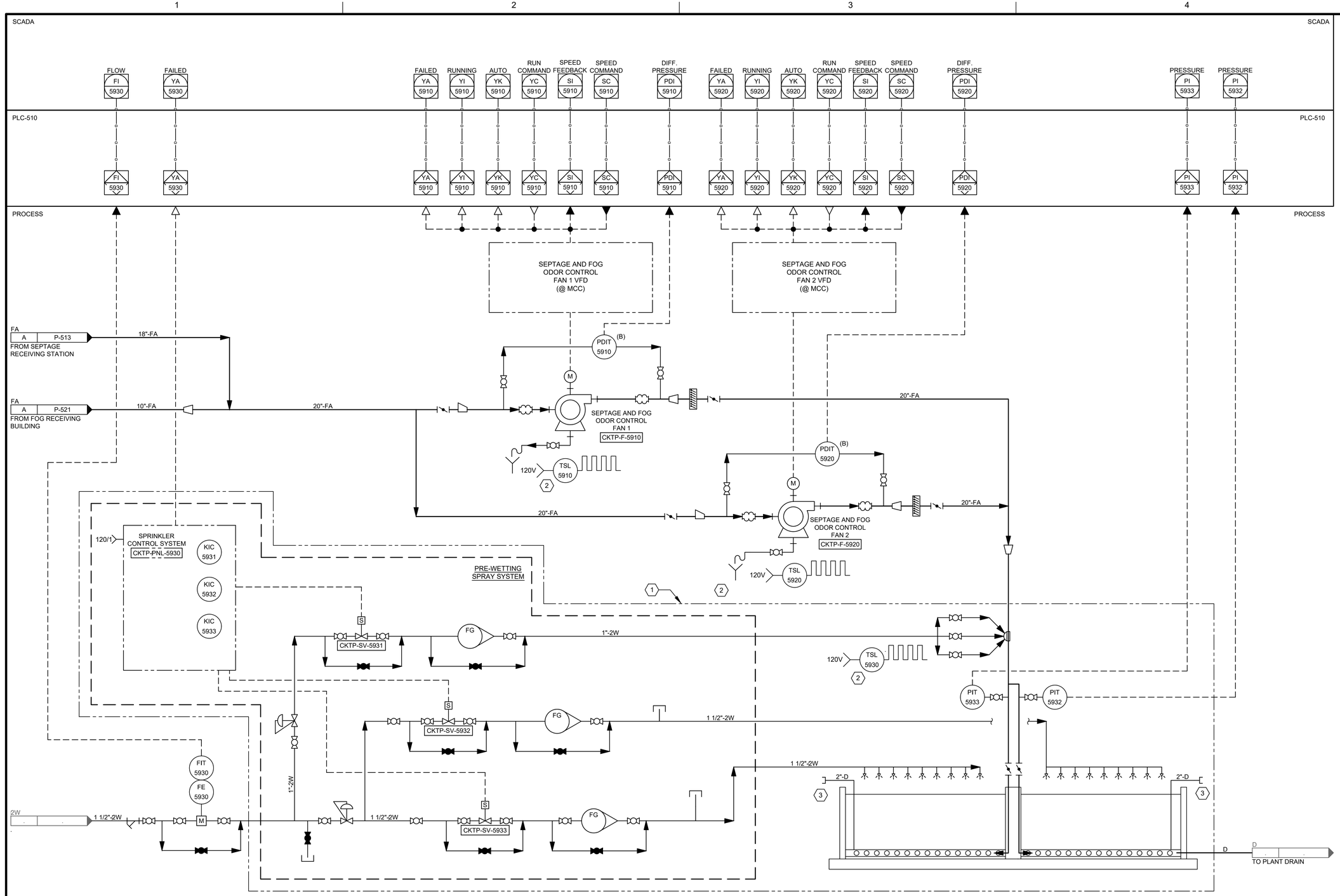

GENERAL NOTES:

1. (B) DENOTES INSTRUMENTATION PROVIDED BY FAN VENDOR.

KEYNOTES:

1. ITEMS WITHIN THE DASHED AREA ARE TO BE PROVIDED BY THE BIOFILTER SUPPLIER, SEE SPECIFICATION 44 31 21.
2. HEAT TRACE AND INSULATE MAIN ODOR CONTROL FAN DRAINS TO BE ROUTED TO BIOFILTER. DUCT DRAINS TO BE ROUTED TO THE NEAREST FLOOR DRAIN.
3. FLUSH PORT. TYPICAL ON EACH AIR DISTRIBUTION LATERAL.

ISSUE	DATE	DESCRIPTION

PROJECT MANAGER	Andrew Staples
Design Manager	J. Zahller
Civil	J. Becker
Structural	M. Hijazi
Process	J. Zahller
Mechanical	K. Sutton
Electrical/Instrumentation	L. Kirmeyer / J. McReynolds
Contract No.	
PROJECT NUMBER	10367638

PROCESS: JEFFREY D. ZAHLLER, STATE OF WASHINGTON, 44824, REGISTERED PROFESSIONAL ENGINEER — PRELIMINARY — 12/07/23

INSTRUMENTATION: JOEL H. MCREYNOLDS, STATE OF WASHINGTON, 20100328, REGISTERED PROFESSIONAL ENGINEER — PRELIMINARY — 12/07/23

KITSAP COUNTY

CENTRAL KITSAP TREATMENT PLANT

PROCESS AND INSTRUMENTATION DIAGRAMS

SEPTAGE / FOG ODOR CONTROL

0 1" 2"

FILENAME

SCALE

SHEET P-590

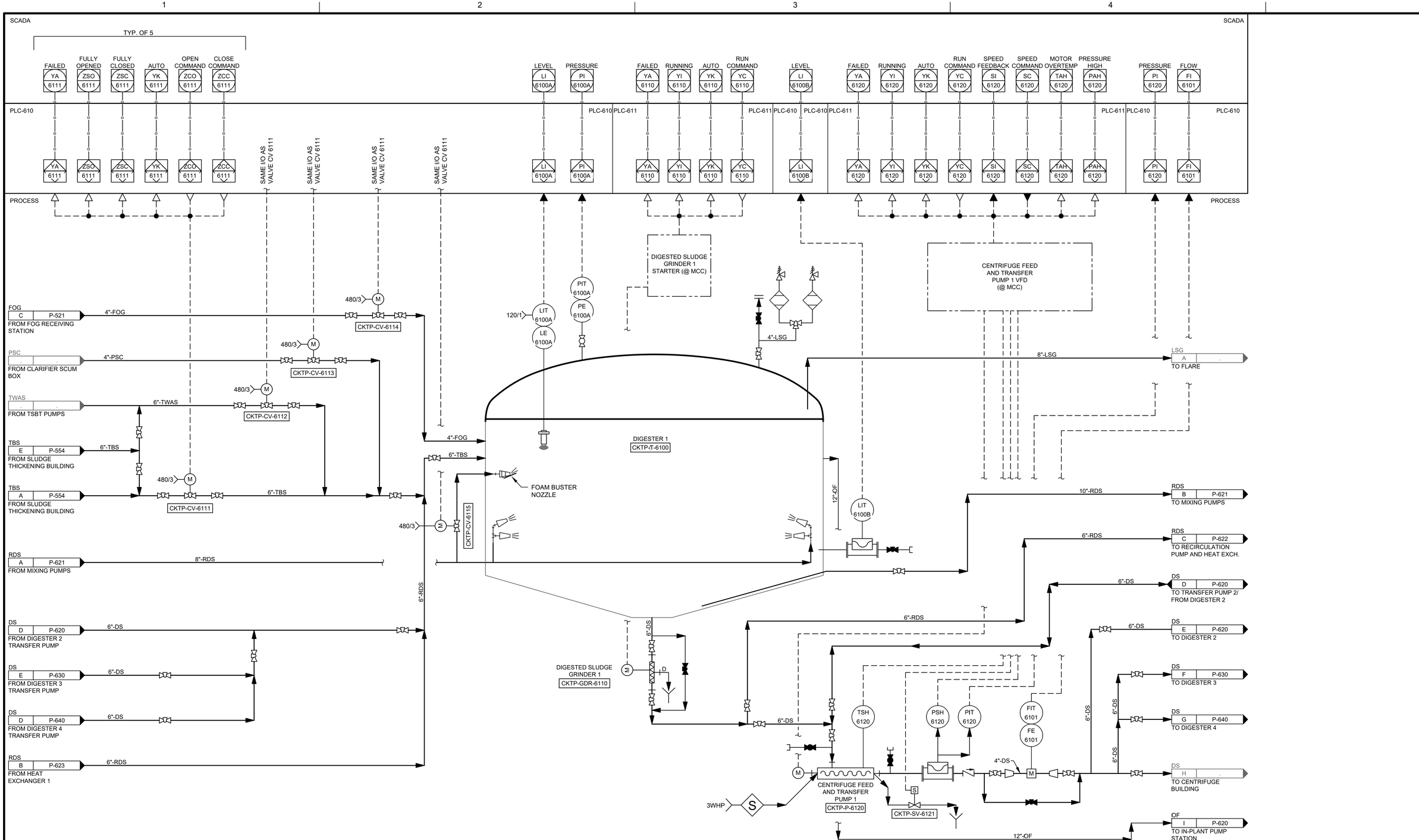

ISSUE	DATE	DESCRIPTION

PROJECT MANAGER	Andrew Staples
Design Manager	J. Zahller
Civil	J. Becker
Structural	M. Hijazi
Process	J. Zahller
Mechanical	K. Sutton
Electrical/Instrumentation	L. Kirmeyer / J. McReynolds
Contract No.	
PROJECT NUMBER	10367638

PROCESS: JEFFREY D. ZAHLLER, STATE OF WASHINGTON, 44824, REGISTERED PROFESSIONAL ENGINEER — PRELIMINARY — 12/07/23

INSTRUMENTATION: JOELLA MCREYNOLDS, STATE OF WASHINGTON, 20100328, REGISTERED PROFESSIONAL ENGINEER — PRELIMINARY — 12/07/23

KITSAP COUNTY

CENTRAL KITSAP TREATMENT PLANT

PROCESS AND INSTRUMENTATION DIAGRAMS

DIGESTER 1

0 1" 2"

FILENAME

SCALE

SHEET P-610

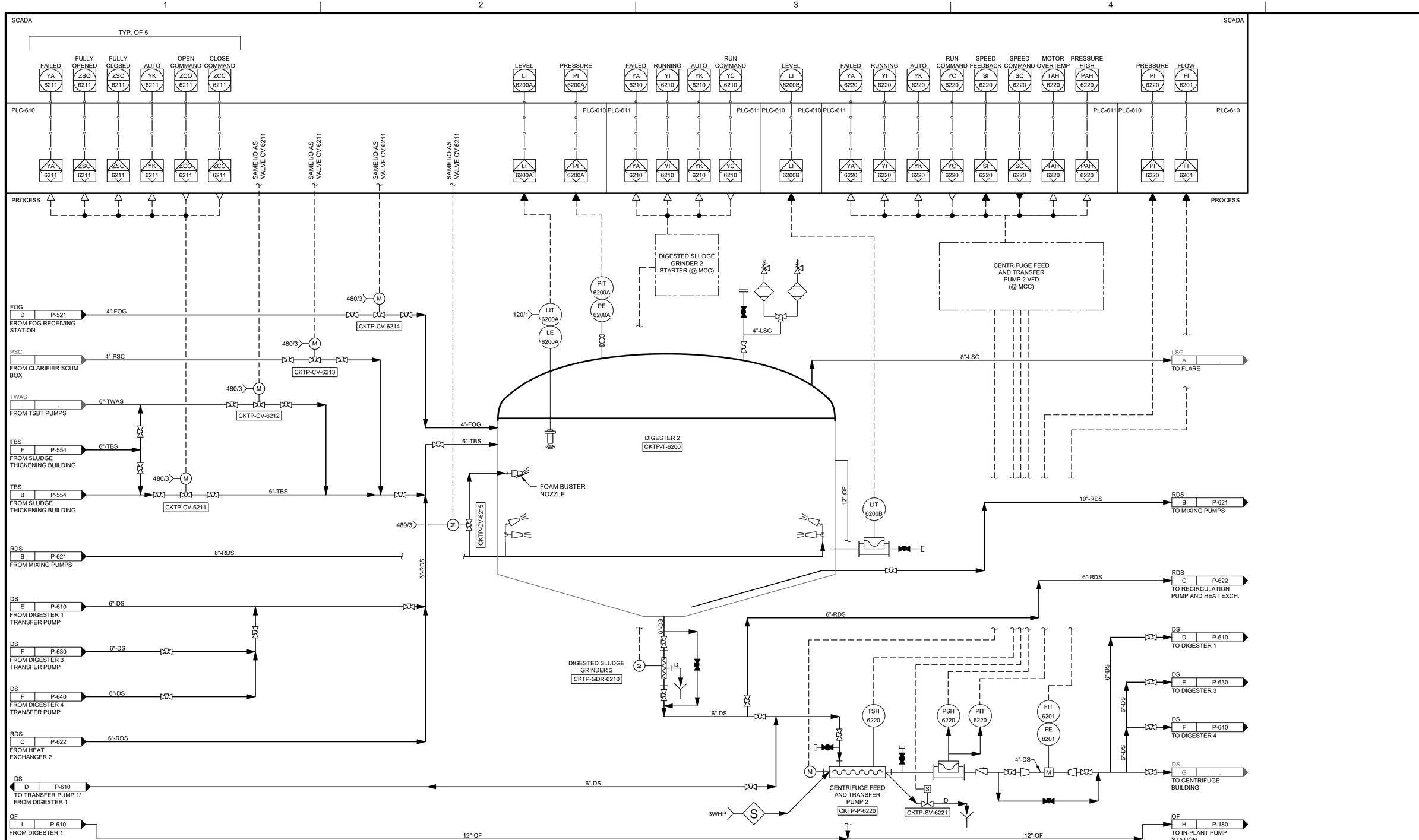

ISSUE	DATE	DESCRIPTION

PROJECT MANAGER	Andrew Staples
Design Manager	J. Zahller
Civil	J. Becker
Structural	M. Hijazi
Process	J. Zahller
Mechanical	K. Sutton
Electrical/Instrumentation	L. Kirmeyer / J. McReynolds
Contract No.	
PROJECT NUMBER	10367638

PROCESS:

JEFFREY D. ZAHLER STATE OF WASHINGTON 44824 REGISTERED PROFESSIONAL ENGINEER
PRELIMINARY
12/07/23

INSTRUMENTATION:

JOEL H. MCREYNOLDS STATE OF WASHINGTON 20100328 REGISTERED PROFESSIONAL ENGINEER
PRELIMINARY
12/07/23

KITSAP COUNTY

CENTRAL KITSAP TREATMENT PLANT

PROCESS AND INSTRUMENTATION DIAGRAMS

DIGESTER 2

0 1" 2"

FILENAME

SCALE

SHEET P-620

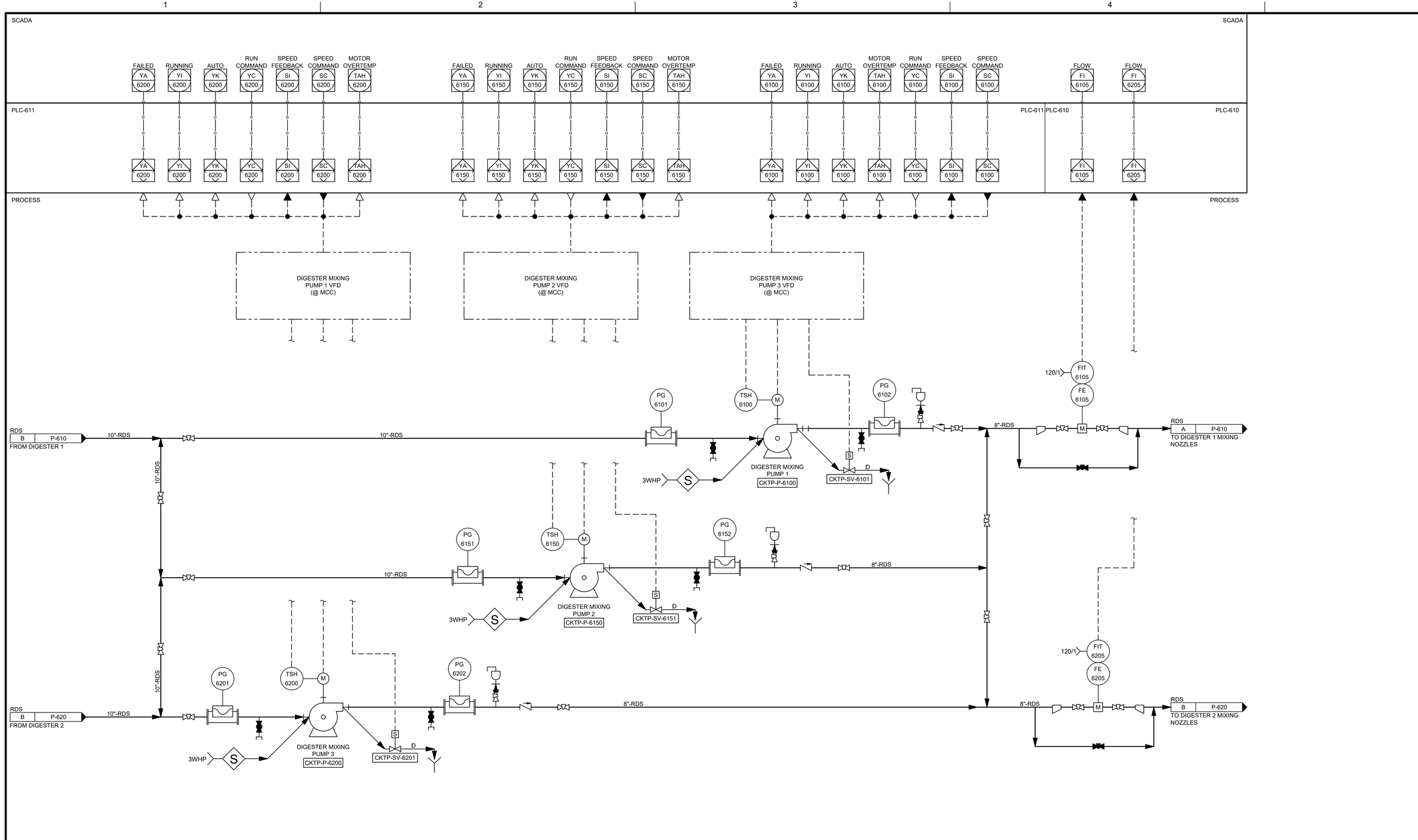

ISSUE	DATE	DESCRIPTION

PROJECT MANAGER	Andrew Staples
Design Manager	J. Zahller
Civil	J. Becker
Structural	M. Hijazi
Process	J. Zahller
Mechanical	K. Sutton
Electrical/Instrumentation	L. Kirmeyer / J. McReynolds
Contract No.	
PROJECT NUMBER	10367638

PROCESS: JEFFREY D. ZAHLLER, STATE OF WASHINGTON, 44824, REGISTERED PROFESSIONAL ENGINEER — PRELIMINARY — 12/07/23

INSTRUMENTATION: JOEL H. MCREYNOLDS, STATE OF WASHINGTON, 20100328, REGISTERED PROFESSIONAL ENGINEER — PRELIMINARY — 12/07/23

KITSAP COUNTY

CENTRAL KITSAP TREATMENT PLANT

PROCESS AND INSTRUMENTATION DIAGRAMS

DIGESTERS 1 AND 2 MIXING SYSTEM

0 1" 2"

FILENAME

SCALE

SHEET P-621

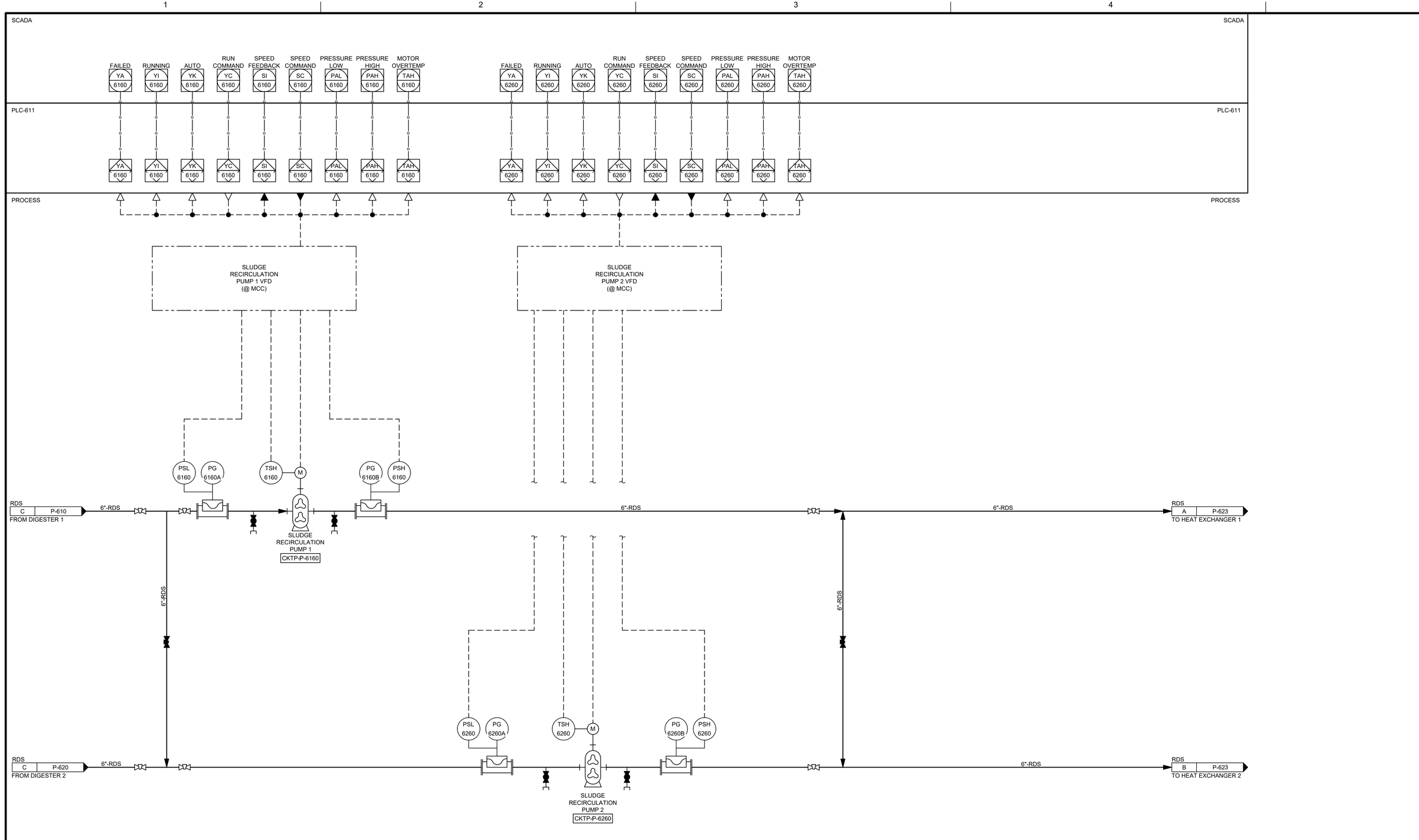

ISSUE	DATE	DESCRIPTION

PROJECT MANAGER	**Andrew Staples**
Design Manager	**J. Zahller**
Civil	**J. Becker**
Structural	**M. Hijazi**
Process	**J. Zahller**
Mechanical	**K. Sutton**
Electrical/Instrumentation	**L. Kirmeyer / J. McReynolds**
Contract No.	
PROJECT NUMBER	**10367638**

PROCESS:

JEFFREY D. ZAHLLER STATE OF WASHINGTON 44824 REGISTERED PROFESSIONAL ENGINEER

PRELIMINARY

12/07/23

INSTRUMENTATION:

JOEL H. MCREYNOLDS STATE OF WASHINGTON 20100328 REGISTERED PROFESSIONAL ENGINEER

PRELIMINARY

12/07/23

KITSAP COUNTY

CENTRAL KITSAP TREATMENT PLANT

PROCESS AND INSTRUMENTATION DIAGRAMS

DIGESTERS 1 AND 2 RECIRCULATION PUMPS

0 1" 2"

FILENAME

SCALE

SHEET **P-622**

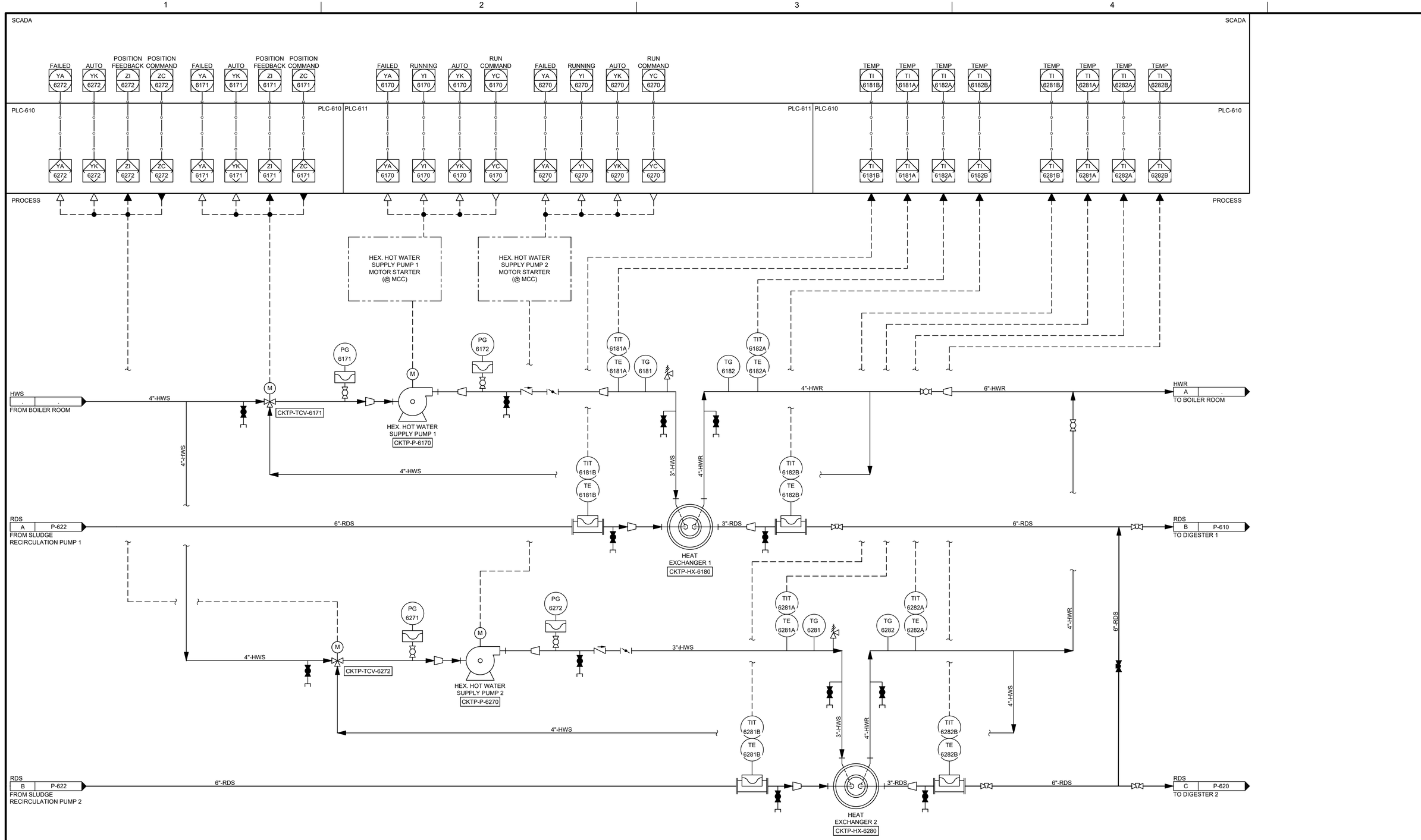

ISSUE	DATE	DESCRIPTION

PROJECT MANAGER	Andrew Staples
Design Manager	J. Zahller
Civil	J. Becker
Structural	M. Hijazi
Process	J. Zahller
Mechanical	K. Sutton
Electrical/Instrumentation	L. Kirmeyer / J. McReynolds
Contract No.	
PROJECT NUMBER	10367638

PROCESS:

JEFFREY D. ZAHLLER — STATE OF WASHINGTON — 44824 — REGISTERED PROFESSIONAL ENGINEER — PRELIMINARY — 12/07/23

INSTRUMENTATION:

JOEL H. MCREYNOLDS — STATE OF WASHINGTON — 20100328 — REGISTERED PROFESSIONAL ENGINEER — PRELIMINARY — 12/07/23

KITSAP COUNTY

CENTRAL KITSAP TREATMENT PLANT

PROCESS AND INSTRUMENTATION DIAGRAMS

DIGESTERS 1 AND 2 HEAT EXCHANGERS

0 1" 2"

FILENAME

SCALE

SHEET P-623

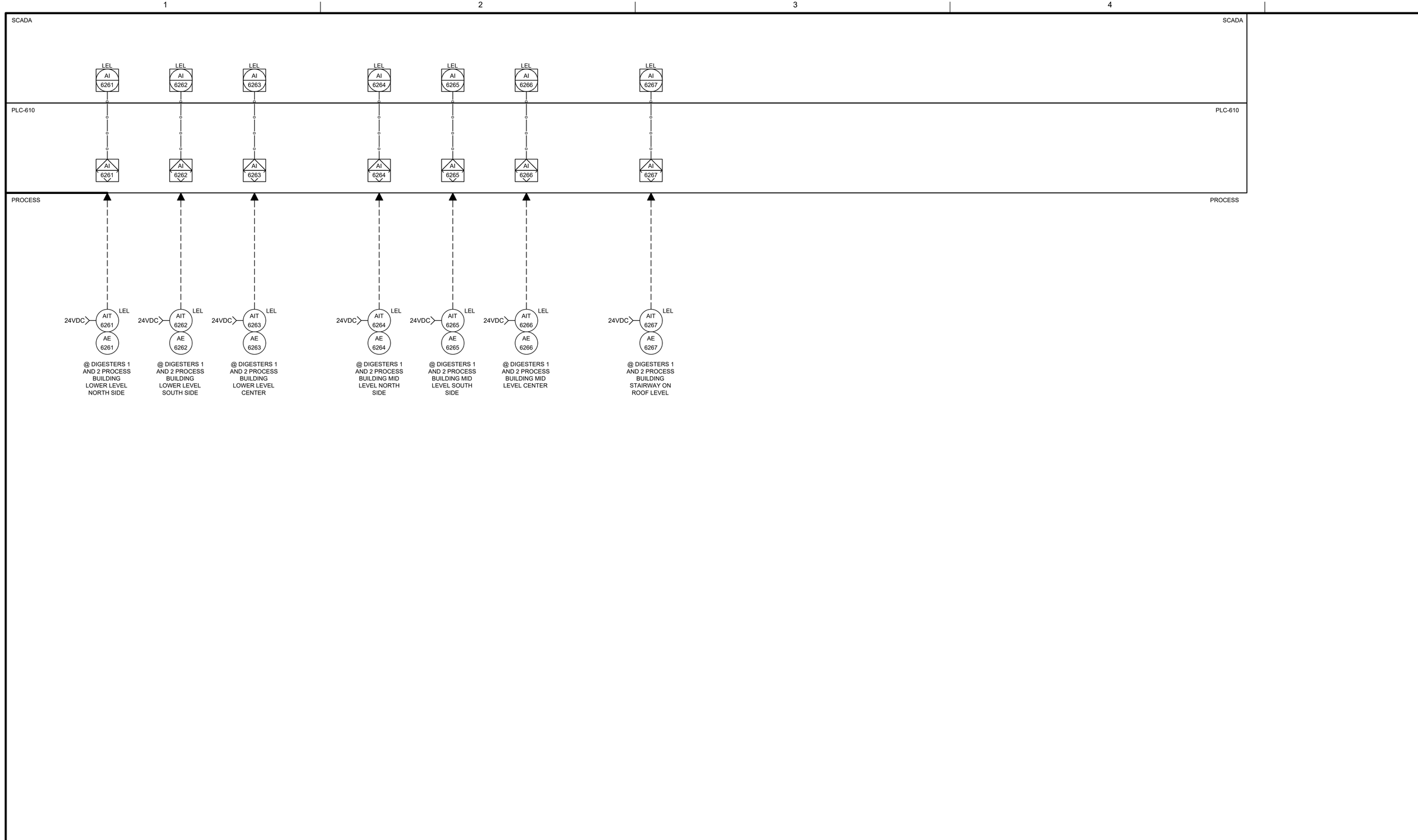

ISSUE	DATE	DESCRIPTION

PROJECT MANAGER	**Andrew Staples**
Design Manager	**J. Zahller**
Civil	**J. Becker**
Structural	**M. Hijazi**
Process	**J. Zahller**
Mechanical	**K. Sutton**
Electrical/Instrumentation	**L. Kirmeyer / J. McReynolds**
Contract No.	
PROJECT NUMBER	**10367638**

PROCESS:

JEFFREY D. ZAHLLER STATE OF WASHINGTON 44824 REGISTERED PROFESSIONAL ENGINEER

PRELIMINARY

12/07/23

INSTRUMENTATION:

JOEL H. MCREYNOLDS STATE OF WASHINGTON 20100328 REGISTERED PROFESSIONAL ENGINEER

PRELIMINARY

12/07/23

KITSAP COUNTY

CENTRAL KITSAP TREATMENT PLANT

PROCESS AND INSTRUMENTATION DIAGRAMS

DIGESTERS 1 AND 2 BUILDING MONITORING

0 1" 2"

FILENAME

SCALE

SHEET

P-626

GENERAL NOTES:

1. ALL ETHERNET SWITCHES TO BE MANAGED, WITH SEPARATE VLANS SET UP FOR NETWORK MANAGEMENT, POWER MONITORING, AND CONTROL NETWORKS. ENSURE THAT EACH DEVICE IS CONNECTED TO THE APPROPRIATE VLAN.

KEYNOTES: (X)

1. ITEMS ON THIS NETWORK ARE TO BE CONNECTED IN A FAULT TOLERANT DEVICE-LEVEL RING SUCH THAT THE FAILURE OF ANY SINGLE DEVICE WILL STILL ALLOW ALL OTHER DEVICES TO CONTINUE TO COMMUNICATE NORMALLY.

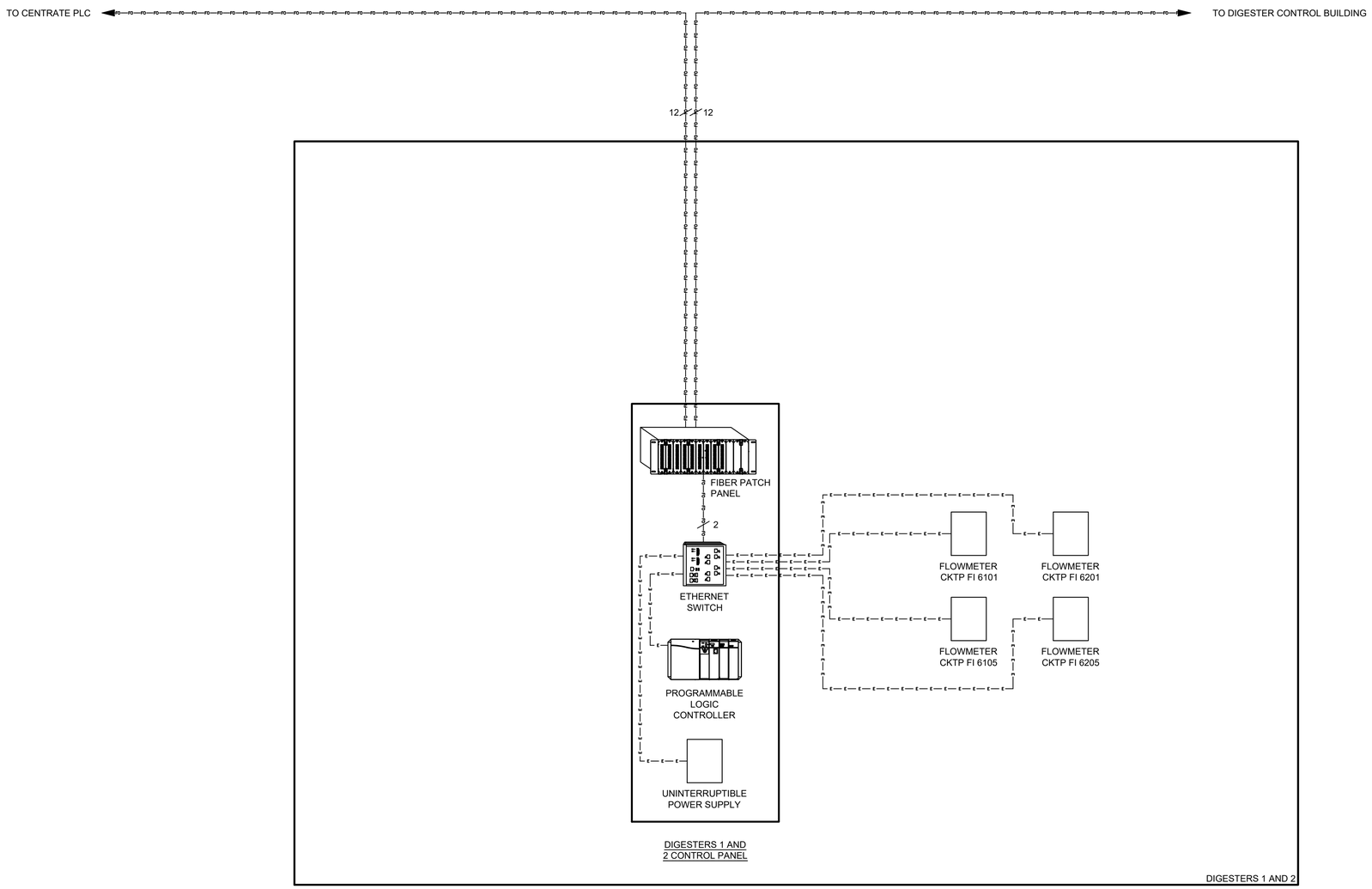

LEGEND

- CAT 6 CABLE
- FIBER OPTIC
- SERIAL CABLE
- # OR # — NUMBER OF FIBER OPTIC STRANDS
- EQUIPMENT AND STRUCTURES INSTALLED UNDER THIS CONTRACT
- EXISTING EQUIPMENT AND STRUCTURES

ISSUE	DATE	DESCRIPTION

PROJECT MANAGER	Andrew Staples
Design Manager	J. Zahller
Civil	J. Becker
Structural	M. Hijazi
Process	J. Zahller
Mechanical	K. Sutton
Electrical/Instrumentation	L. Kirmeyer / J. McReynolds
Contract No.	
PROJECT NUMBER	10367638

PROCESS: JEFFREY D. ZAHLLER STATE OF WASHINGTON 44824 REGISTERED PROFESSIONAL ENGINEER PRELIMINARY 12/07/23

INSTRUMENTATION: JOEL H. MCREYNOLDS STATE OF WASHINGTON 20100328 REGISTERED PROFESSIONAL ENGINEER PRELIMINARY 12/07/23

KITSAP COUNTY

CENTRAL KITSAP TREATMENT PLANT

PROCESS AND INSTRUMENTATION DIAGRAM

DIGESTERS 1 AND 2 PROCESS BUILDING NETWORK DIAGRAM

0 1" 2"

FILENAME

SCALE

SHEET P-628

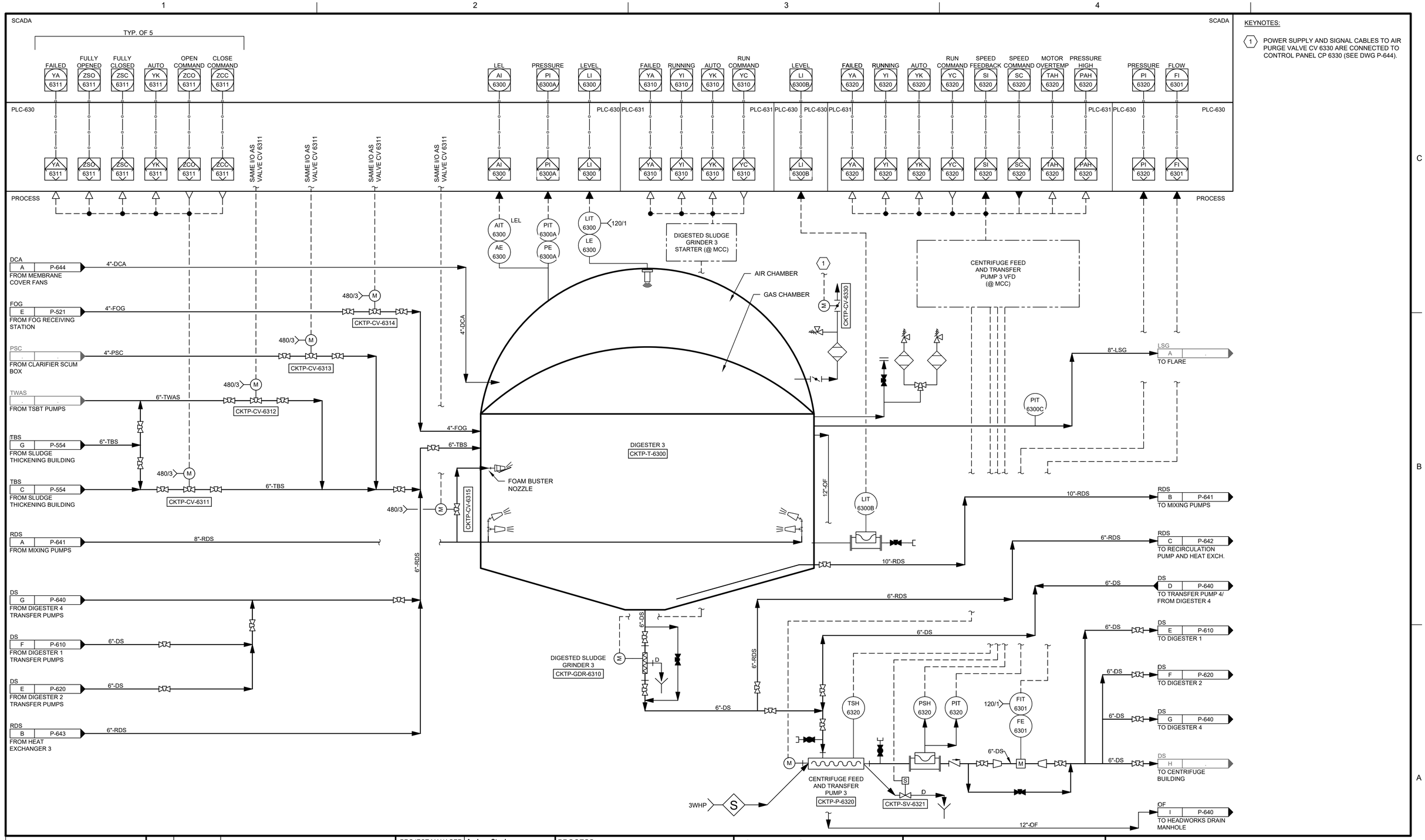

KEYNOTES:

1. POWER SUPPLY AND SIGNAL CABLES TO AIR PURGE VALVE CV 6330 ARE CONNECTED TO CONTROL PANEL CP 6330 (SEE DWG P-644).

ISSUE	DATE	DESCRIPTION

PROJECT MANAGER	Andrew Staples
Design Manager	J. Zahller
Civil	J. Becker
Structural	M. Hijazi
Process	J. Zahller
Mechanical	K. Sutton
Electrical/Instrumentation	L. Kirmeyer / J. McReynolds
Contract No.	
PROJECT NUMBER	10367638

PROCESS: JEFFREY D. ZAHLER, STATE OF WASHINGTON, 44824, REGISTERED PROFESSIONAL ENGINEER — PRELIMINARY — 12/07/23

INSTRUMENTATION: JOEL H. MCREYNOLDS, STATE OF WASHINGTON, 20100328, REGISTERED PROFESSIONAL ENGINEER — PRELIMINARY — 12/07/23

KITSAP COUNTY

CENTRAL KITSAP TREATMENT PLANT

PROCESS AND INSTRUMENTATION DIAGRAMS

DIGESTER 3

0 1" 2"

FILENAME

SCALE

SHEET P-630

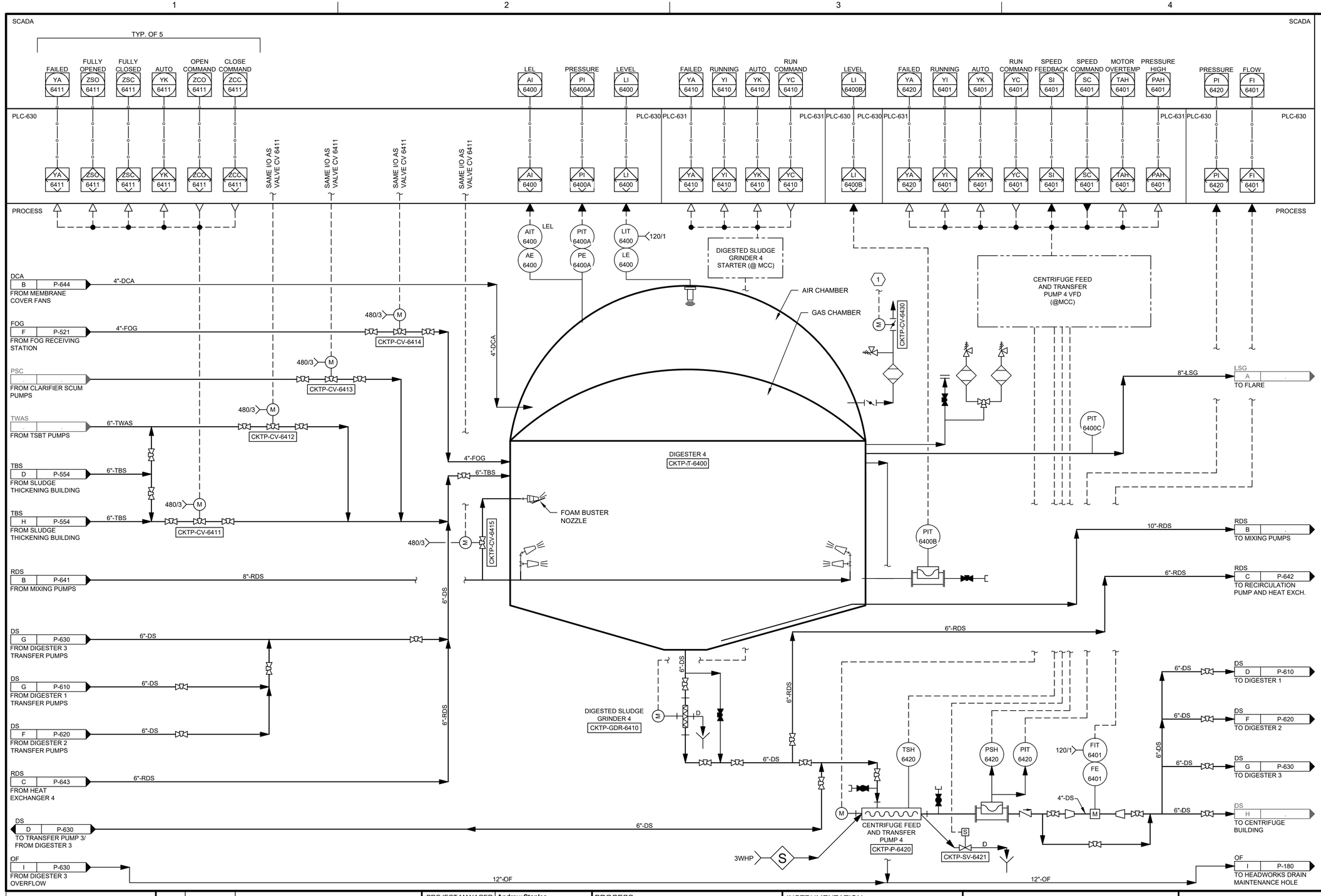

KEYNOTES:

1. POWER SUPPLY AND SIGNAL CABLES TO AIR PURGE VALVE CV 6430 ARE CONNECTED TO CONTROL PANEL CP 6430 (SEE DWG P-644).

ISSUE	DATE	DESCRIPTION

PROJECT MANAGER	Andrew Staples
Design Manager	J. Zahller
Civil	J. Becker
Structural	M. Hijazi
Process	J. Zahller
Mechanical	K. Sutton
Electrical/Instrumentation	L. Kirmeyer / J. McReynolds
Contract No.	
PROJECT NUMBER	10367638

PROCESS: JEFFREY D. ZAHLLER, STATE OF WASHINGTON, 44824, REGISTERED PROFESSIONAL ENGINEER — PRELIMINARY — 12/07/23

INSTRUMENTATION: JOEL H. MCREYNOLDS, STATE OF WASHINGTON, 20100328, REGISTERED PROFESSIONAL ENGINEER — PRELIMINARY — 12/07/23

KITSAP COUNTY

CENTRAL KITSAP TREATMENT PLANT

PROCESS AND INSTRUMENTATION DIAGRAMS

DIGESTER 4

0 1" 2"

FILENAME

SCALE

SHEET P-640

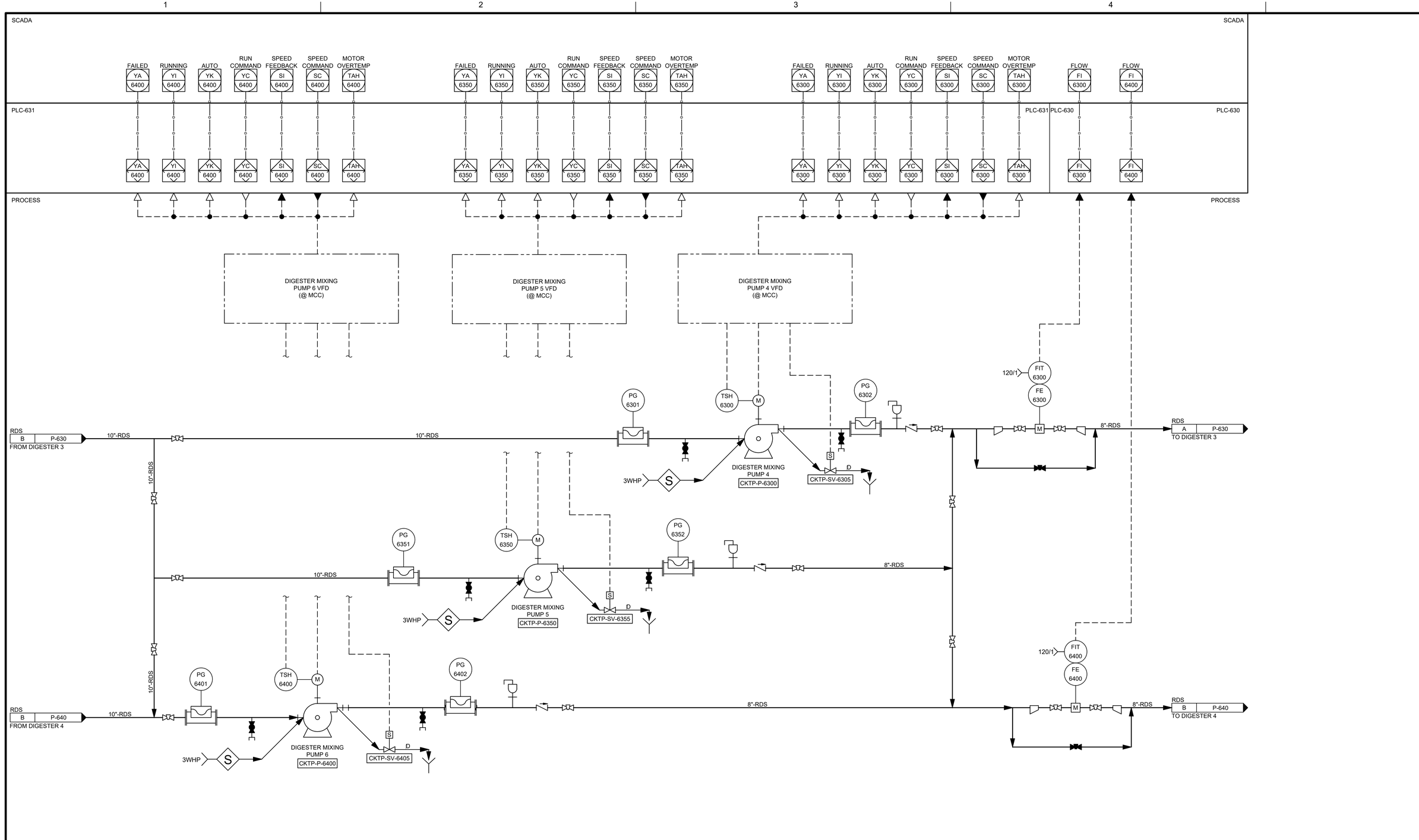

ISSUE	DATE	DESCRIPTION

PROJECT MANAGER	Andrew Staples
Design Manager	J. Zahller
Civil	J. Becker
Structural	M. Hijazi
Process	J. Zahller
Mechanical	K. Sutton
Electrical/Instrumentation	L. Kirmeyer / J. McReynolds
Contract No.	
PROJECT NUMBER	10367638

PROCESS: JEFFREY D. ZAHLLER, STATE OF WASHINGTON, 44824, REGISTERED PROFESSIONAL ENGINEER — PRELIMINARY — 12/07/23

INSTRUMENTATION: JOEL H. MCREYNOLDS, STATE OF WASHINGTON, 20100328, REGISTERED PROFESSIONAL ENGINEER — PRELIMINARY — 12/07/23

KITSAP COUNTY

CENTRAL KITSAP TREATMENT PLANT

PROCESS AND INSTRUMENTATION DIAGRAMS

DIGESTERS 3 AND 4 MIXING SYSTEM

0 1" 2"

FILENAME

SCALE

SHEET P-641

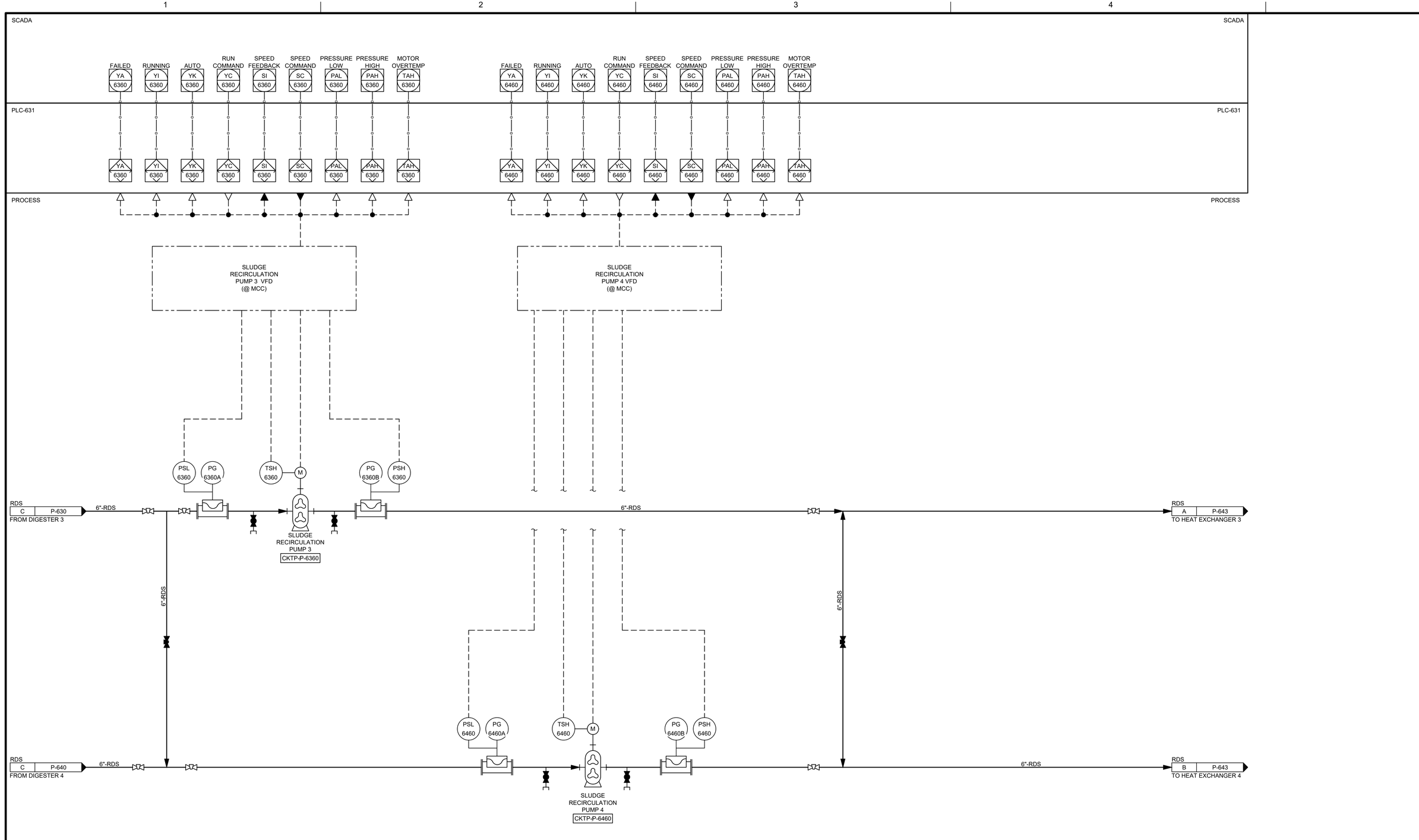

ISSUE	DATE	DESCRIPTION

PROJECT MANAGER	**Andrew Staples**
Design Manager	**J. Zahller**
Civil	**J. Becker**
Structural	**M. Hijazi**
Process	**J. Zahller**
Mechanical	**K. Sutton**
Electrical/Instrumentation	**L. Kirmeyer / J. McReynolds**
Contract No.	
PROJECT NUMBER	**10367638**

PROCESS:

JEFFREY D. ZAHLER, STATE OF WASHINGTON, 44824, REGISTERED PROFESSIONAL ENGINEER

PRELIMINARY

12/07/23

INSTRUMENTATION:

JOEL H. MCREYNOLDS, STATE OF WASHINGTON, 20100328, REGISTERED PROFESSIONAL ENGINEER

PRELIMINARY

12/07/23

KITSAP COUNTY

CENTRAL KITSAP TREATMENT PLANT

PROCESS AND INSTRUMENTATION DIAGRAMS

DIGESTERS 3 AND 4 RECIRCULATION PUMPS

0 1" 2"

FILENAME

SCALE

SHEET **P-642**

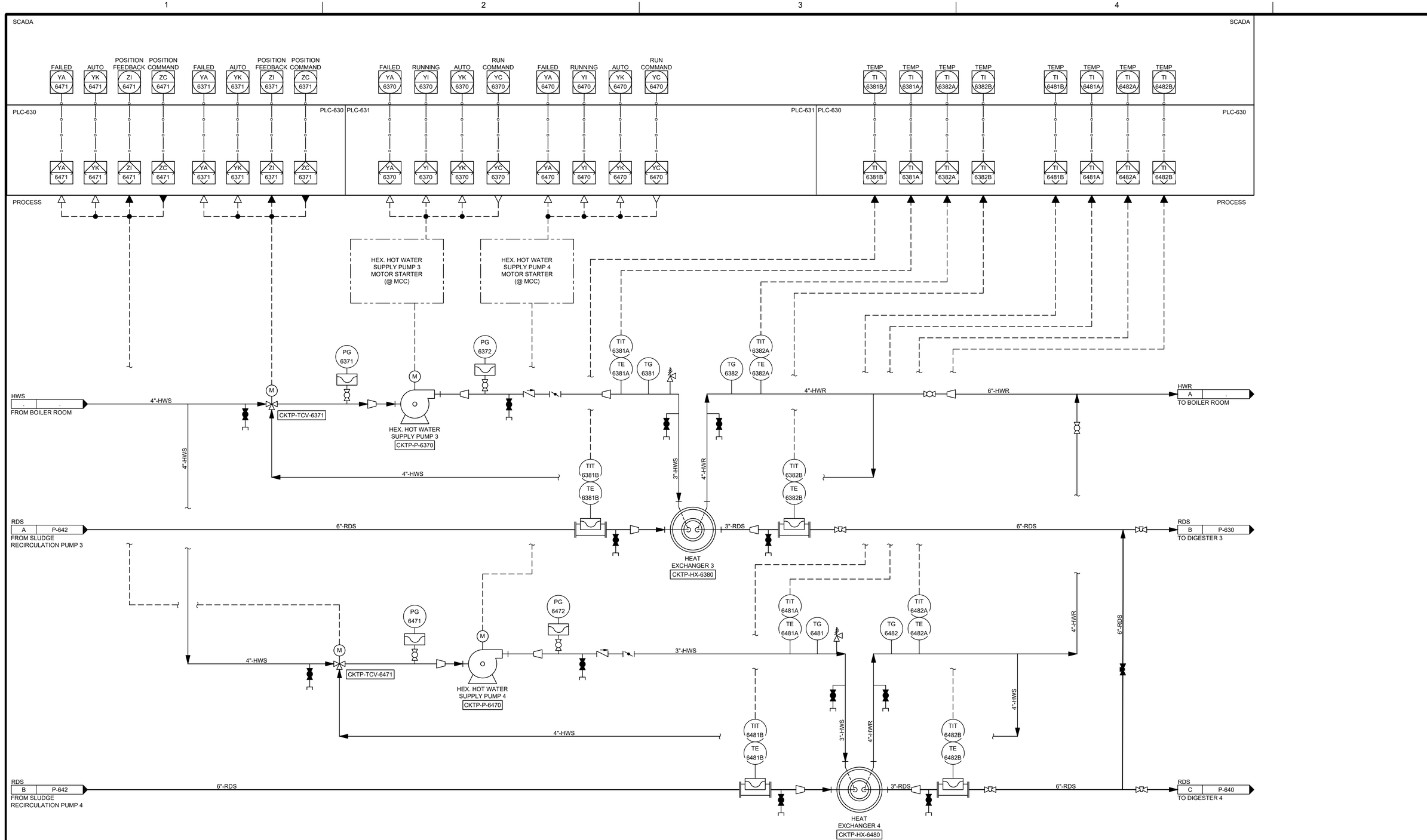

ISSUE	DATE	DESCRIPTION

PROJECT MANAGER	Andrew Staples
Design Manager	J. Zahller
Civil	J. Becker
Structural	M. Hijazi
Process	J. Zahller
Mechanical	K. Sutton
Electrical/Instrumentation	L. Kirmeyer / J. McReynolds
Contract No.	
PROJECT NUMBER	10367638

PROCESS:

JEFFREY D. ZAHLLER STATE OF WASHINGTON 44824 REGISTERED PROFESSIONAL ENGINEER PRELIMINARY 12/07/23

INSTRUMENTATION:

JOEL H. MCREYNOLDS STATE OF WASHINGTON 20100328 REGISTERED PROFESSIONAL ENGINEER PRELIMINARY 12/07/23

KITSAP COUNTY

CENTRAL KITSAP TREATMENT PLANT

PROCESS AND INSTRUMENTATION DIAGRAMS

DIGESTERS 3 AND 4 HEAT EXCHANGERS

0 1" 2"

FILENAME

SCALE

SHEET P-643

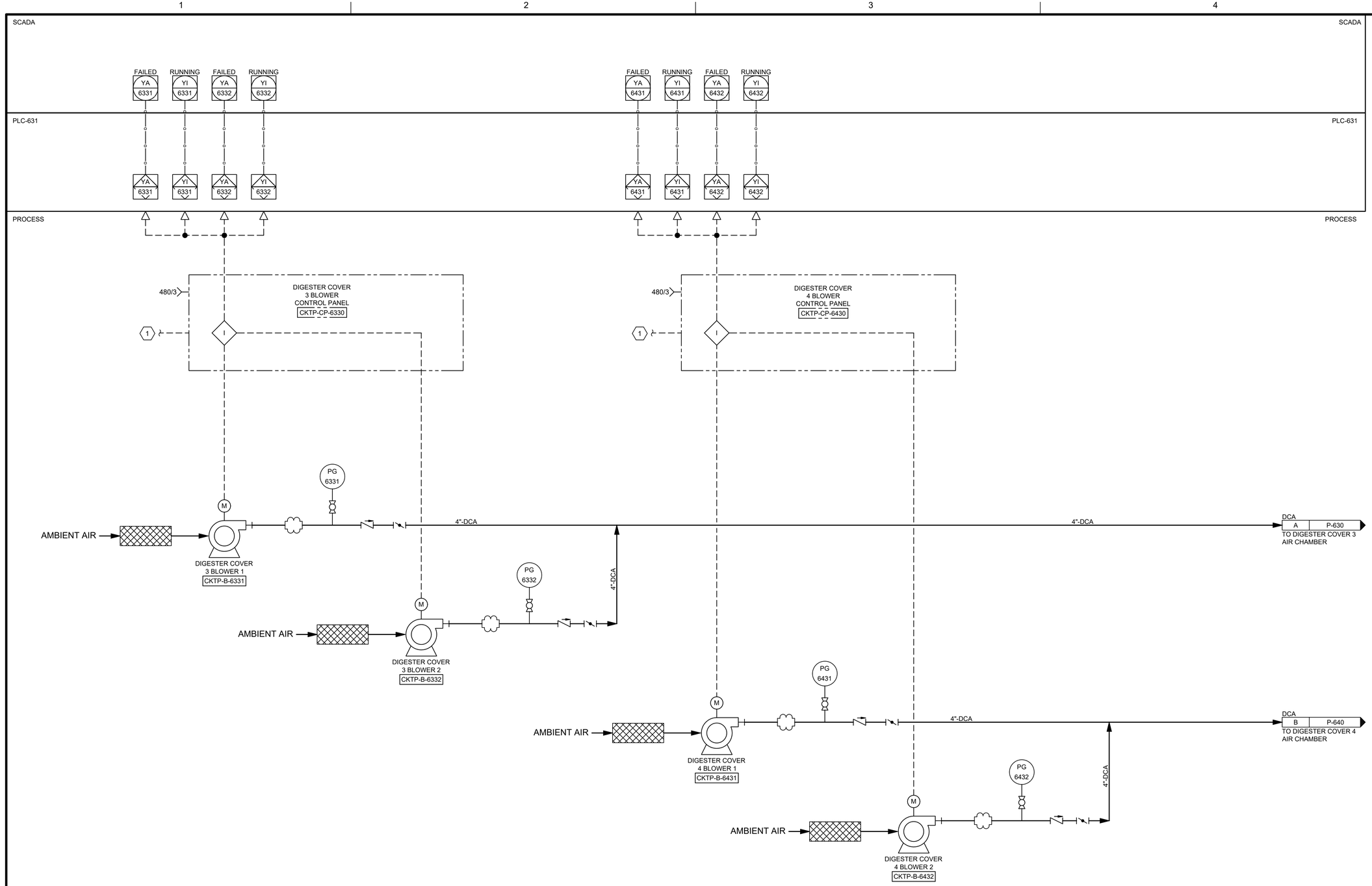

KEYNOTES:

1. POWER SUPPLY AND SIGNAL CABLES TO AIR PURGE VALVES CV 6430 AND CV 6440 ARE CONNECTED TO CONTROL PANELS CP 6430 AND CP 6440, RESPECTIVELY. (SEE DWGS P-630 AND P-640).

ISSUE	DATE	DESCRIPTION

PROJECT MANAGER	Andrew Staples
Design Manager	J. Zahller
Civil	J. Becker
Structural	M. Hijazi
Process	J. Zahller
Mechanical	K. Sutton
Electrical/Instrumentation	L. Kirmeyer / J. McReynolds
Contract No.	
PROJECT NUMBER	10367638

PROCESS: PRELIMINARY 12/07/23

INSTRUMENTATION: PRELIMINARY 12/07/23

KITSAP COUNTY

CENTRAL KITSAP TREATMENT PLANT

PROCESS AND INSTRUMENTATION DIAGRAMS

DIGESTERS 3 AND 4 GAS HOLDER COVER BLOWERS

0 1" 2"

FILENAME

SCALE

SHEET P-644

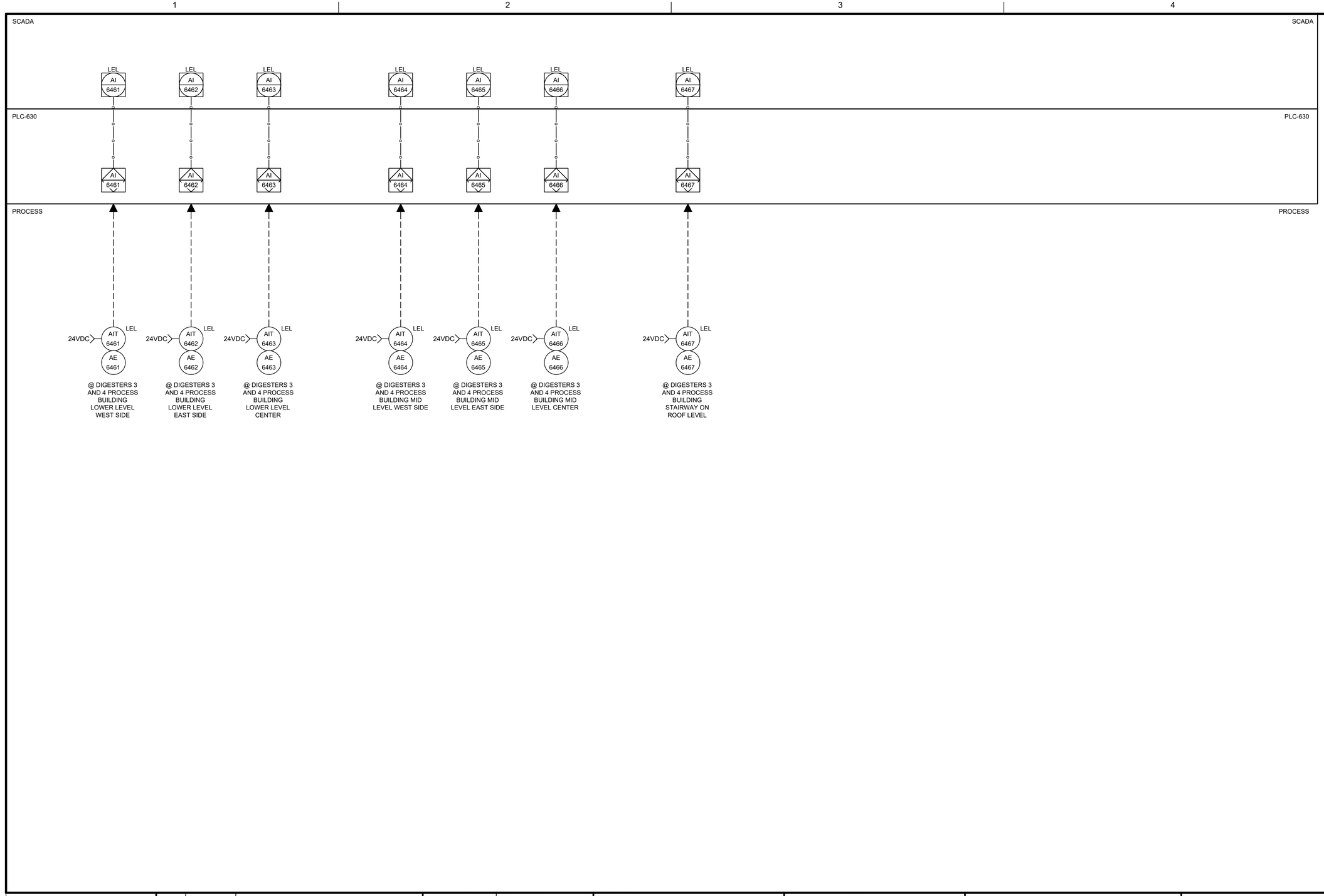

ISSUE	DATE	DESCRIPTION

PROJECT MANAGER	**Andrew Staples**
Design Manager	**J. Zahller**
Civil	**J. Becker**
Structural	**M. Hijazi**
Process	**J. Zahller**
Mechanical	**K. Sutton**
Electrical/Instrumentation	**L. Kirmeyer / J. McReynolds**
Contract No.	
PROJECT NUMBER	**10367638**

PROCESS:

JEFFREY D. ZAHLLER STATE OF WASHINGTON 44824 REGISTERED PROFESSIONAL ENGINEER

PRELIMINARY

12/07/23

INSTRUMENTATION:

JOEL H. MCREYNOLDS STATE OF WASHINGTON 20100328 REGISTERED PROFESSIONAL ENGINEER

PRELIMINARY

12/07/23

KITSAP COUNTY

CENTRAL KITSAP TREATMENT PLANT

PROCESS AND INSTRUMENTATION DIAGRAMS

DIGESTERS 3 AND 4 BUILDING MONITORING

0 1" 2"

FILENAME

SCALE

SHEET

P-646

GENERAL NOTES:

1. ALL ETHERNET SWITCHES TO BE MANAGED, WITH SEPARATE VLANS SET UP FOR NETWORK MANAGEMENT, POWER MONITORING, AND CONTROL NETWORKS. ENSURE THAT EACH DEVICE IS CONNECTED TO THE APPROPRIATE VLAN.

KEYNOTES: X

1. ITEMS ON THIS NETWORK ARE TO BE CONNECTED IN A FAULT TOLERANT DEVICE-LEVEL RING SUCH THAT THE FAILURE OF ANY SINGLE DEVICE WILL STILL ALLOW ALL OTHER DEVICES TO CONTINUE TO COMMUNICATE NORMALLY.

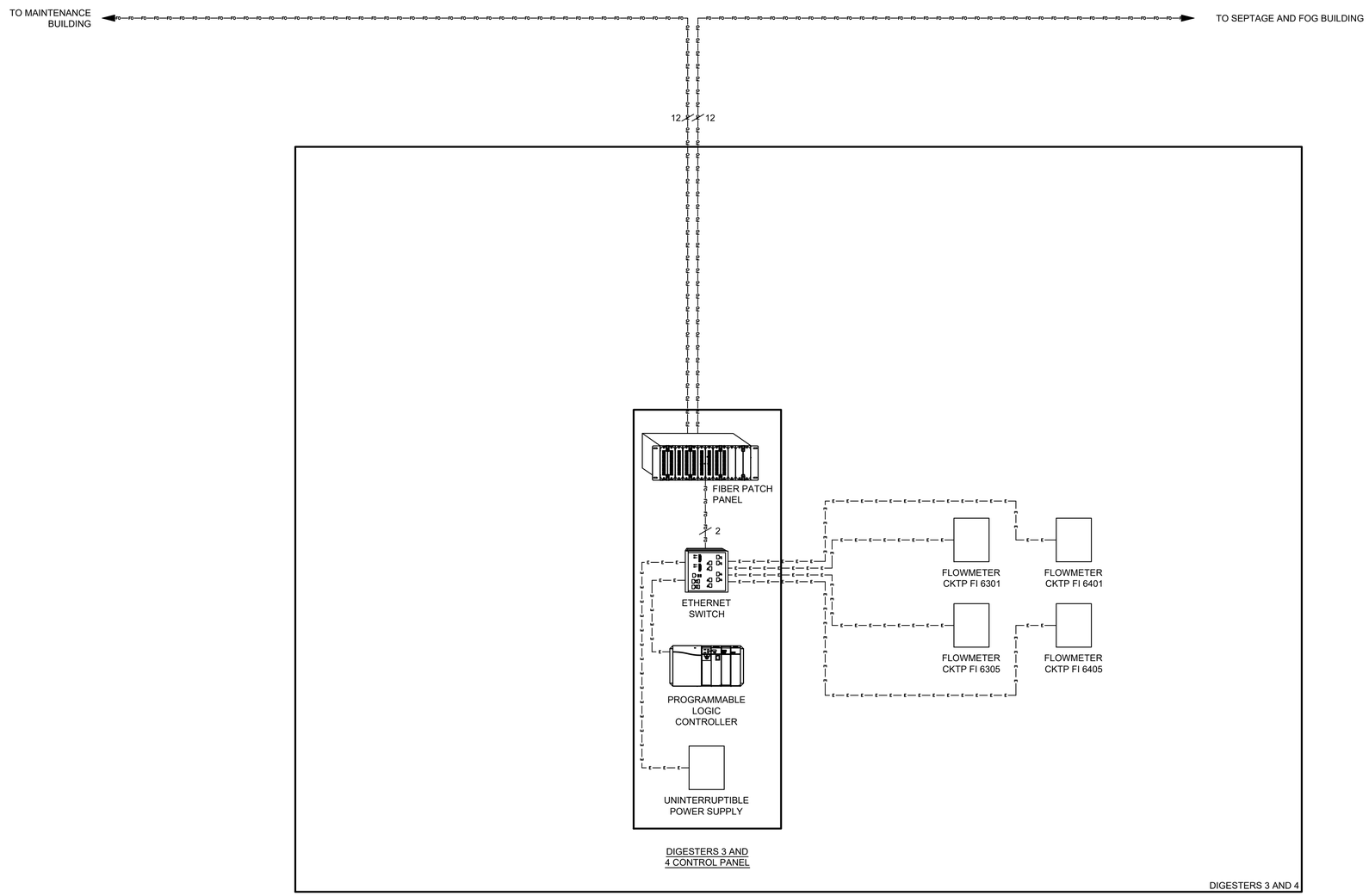

LEGEND

- CAT 6 CABLE
- FIBER OPTIC
- SERIAL CABLE
- # OR # — NUMBER OF FIBER OPTIC STRANDS
- EQUIPMENT AND STRUCTURES INSTALLED UNDER THIS CONTRACT
- EXISTING EQUIPMENT AND STRUCTURES

ISSUE	DATE	DESCRIPTION

PROJECT MANAGER	Andrew Staples
Design Manager	J. Zahller
Civil	J. Becker
Structural	M. Hijazi
Process	J. Zahller
Mechanical	K. Sutton
Electrical/Instrumentation	L. Kirmeyer / J. McReynolds
Contract No.	
PROJECT NUMBER	10367638

PROCESS: JEFFREY D. ZAHLLER, STATE OF WASHINGTON, 44824, REGISTERED PROFESSIONAL ENGINEER — PRELIMINARY — 12/07/23

INSTRUMENTATION: JOEL H. MCREYNOLDS, STATE OF WASHINGTON, 20100328, REGISTERED PROFESSIONAL ENGINEER — PRELIMINARY — 12/07/23

KITSAP COUNTY

CENTRAL KITSAP TREATMENT PLANT

PROCESS AND INSTRUMENTATION DIAGRAM

DIGESTERS 3 AND 4 PROCESS BUILDING NETWORK DIAGRAM

0 1" 2"

FILENAME

SCALE

SHEET P-648

GENERAL NOTES:

1. ALL ETHERNET SWITCHES TO BE MANAGED, WITH SEPARATE VLANS SET UP FOR NETWORK MANAGEMENT, POWER MONITORING, AND CONTROL NETWORKS. ENSURE THAT EACH DEVICE IS CONNECTED TO THE APPROPRIATE VLAN.

KEYNOTES: (X)

1. ITEMS ON THIS NETWORK ARE TO BE CONNECTED IN A FAULT TOLERANT DEVICE-LEVEL RING SUCH THAT THE FAILURE OF ANY SINGLE DEVICE WILL STILL ALLOW ALL OTHER DEVICES TO CONTINUE TO COMMUNICATE NORMALLY.

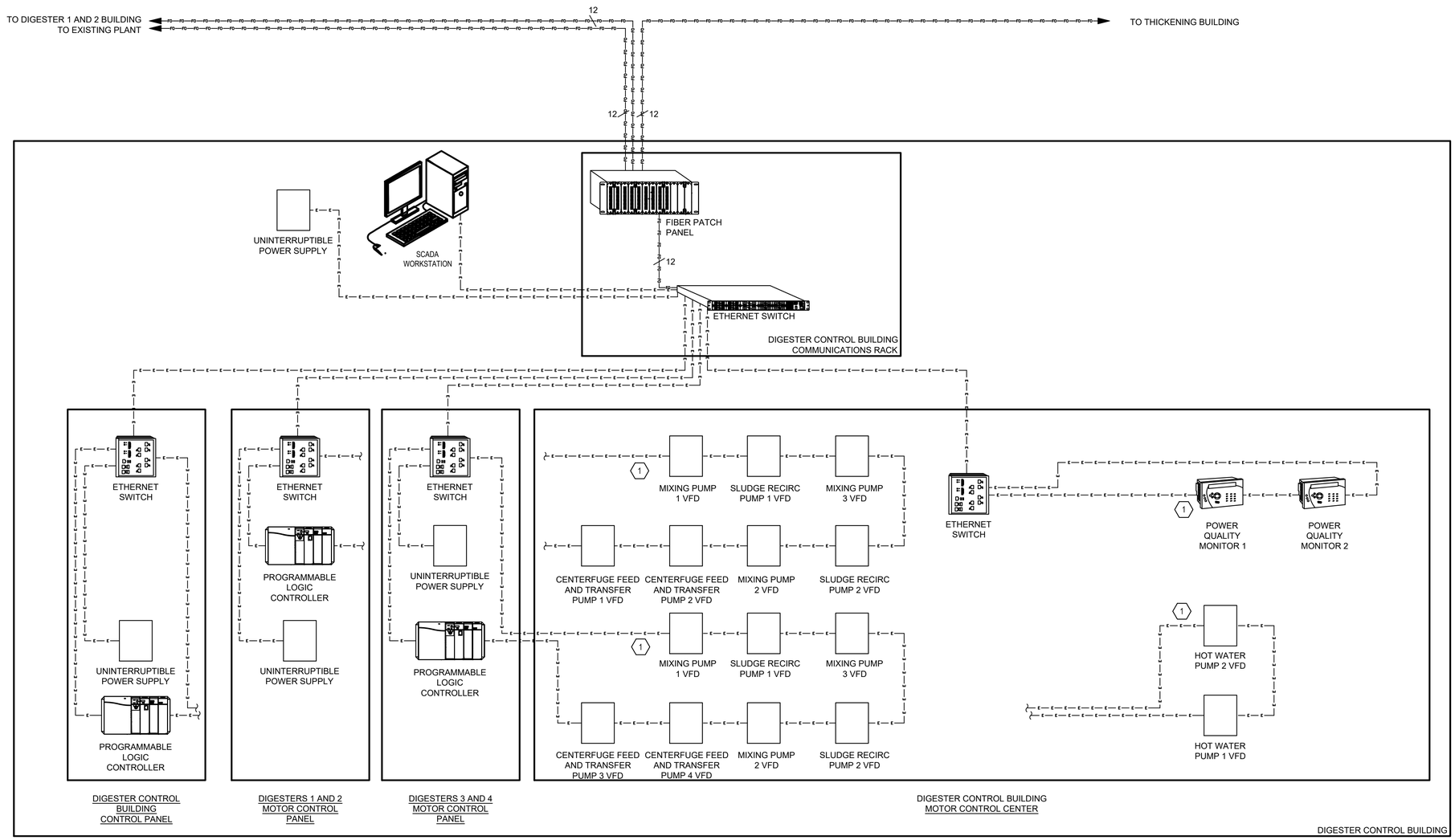

LEGEND

—t—t—t—t—	CAT 6 CABLE
—FO—FO—FO—FO—	FIBER OPTIC
— — — — — —	SERIAL CABLE
# OR #	NUMBER OF FIBER OPTIC STRANDS
	EQUIPMENT AND STRUCTURES INSTALLED UNDER THIS CONTRACT
	EXISTING EQUIPMENT AND STRUCTURES

ISSUE	DATE	DESCRIPTION

PROJECT MANAGER	Andrew Staples
Design Manager	J. Zahller
Civil	J. Becker
Structural	M. Hijazi
Process	J. Zahller
Mechanical	K. Sutton
Electrical/Instrumentation	L. Kirmeyer / J. McReynolds
Contract No.	
PROJECT NUMBER	10367638

PROCESS: JEFFREY D. ZAHLLER, STATE OF WASHINGTON, 44824, REGISTERED PROFESSIONAL ENGINEER — PRELIMINARY — 12/07/23

INSTRUMENTATION: JOEL H. MCREYNOLDS, STATE OF WASHINGTON, 20100328, REGISTERED PROFESSIONAL ENGINEER — PRELIMINARY — 12/07/23

KITSAP COUNTY

CENTRAL KITSAP TREATMENT PLANT

PROCESS AND INSTRUMENTATION DIAGRAM

DIGESTER CONTROL BUILDING NETWORK DIAGRAM

0 1" 2"

FILENAME

SCALE

SHEET P-688

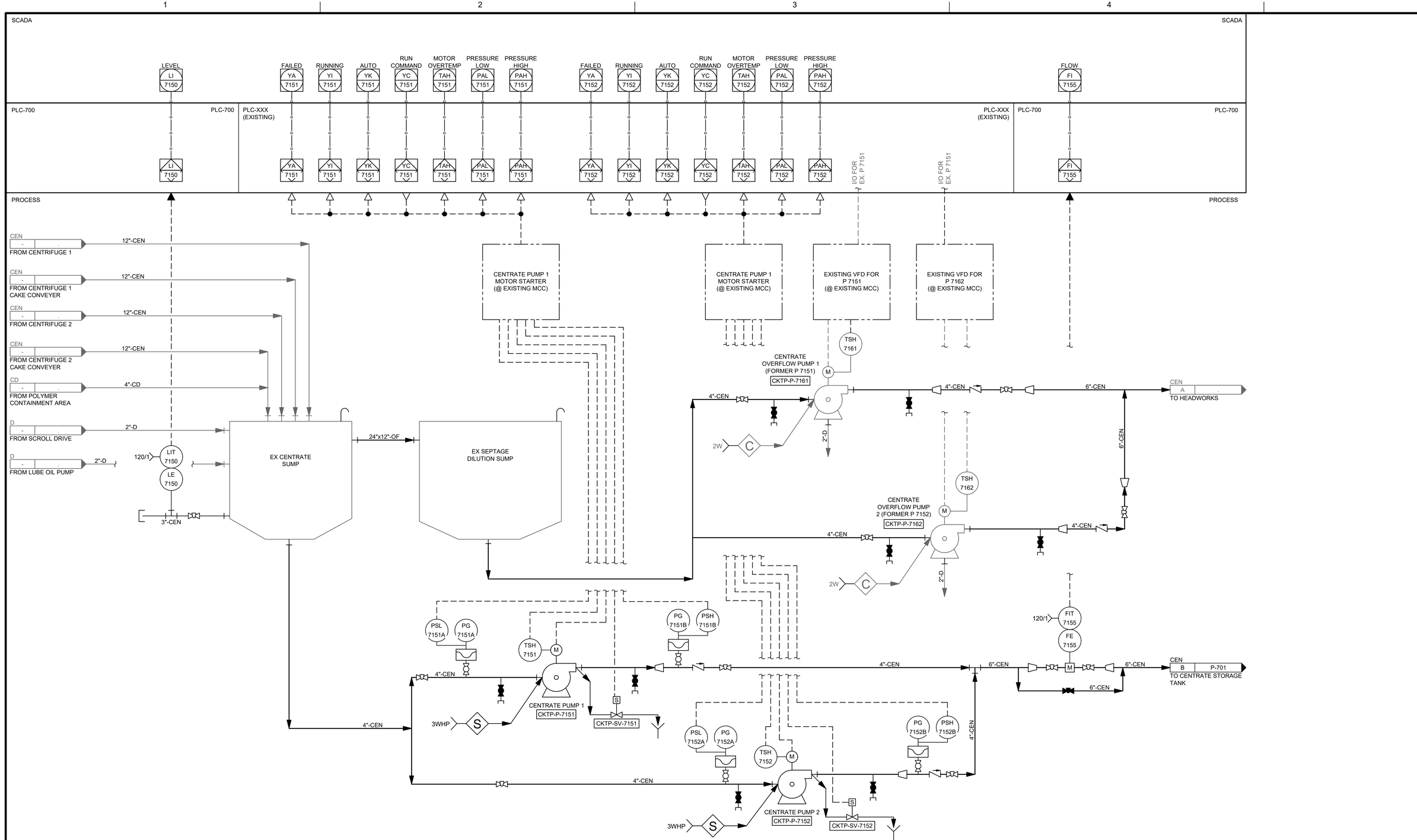

ISSUE	DATE	DESCRIPTION

PROJECT MANAGER	Andrew Staples
Design Manager	J. Zahller
Civil	J. Becker
Structural	M. Hijazi
Process	J. Zahller
Mechanical	K. Sutton
Electrical/Instrumentation	L. Kirmeyer / J. McReynolds
Contract No.	
PROJECT NUMBER	10367638

PROCESS: JEFFREY D. ZAHLLER, STATE OF WASHINGTON, 44824, REGISTERED PROFESSIONAL ENGINEER — PRELIMINARY — 12/07/23

INSTRUMENTATION: JOEL H. MCREYNOLDS, STATE OF WASHINGTON, 20100328, REGISTERED PROFESSIONAL ENGINEER — PRELIMINARY — 12/07/23

KITSAP COUNTY

CENTRAL KITSAP TREATMENT PLANT

PROCESS AND INSTRUMENTATION DIAGRAMS

CENTRATE PUMP STATION

0 1" 2"

FILENAME

SCALE

SHEET P-700

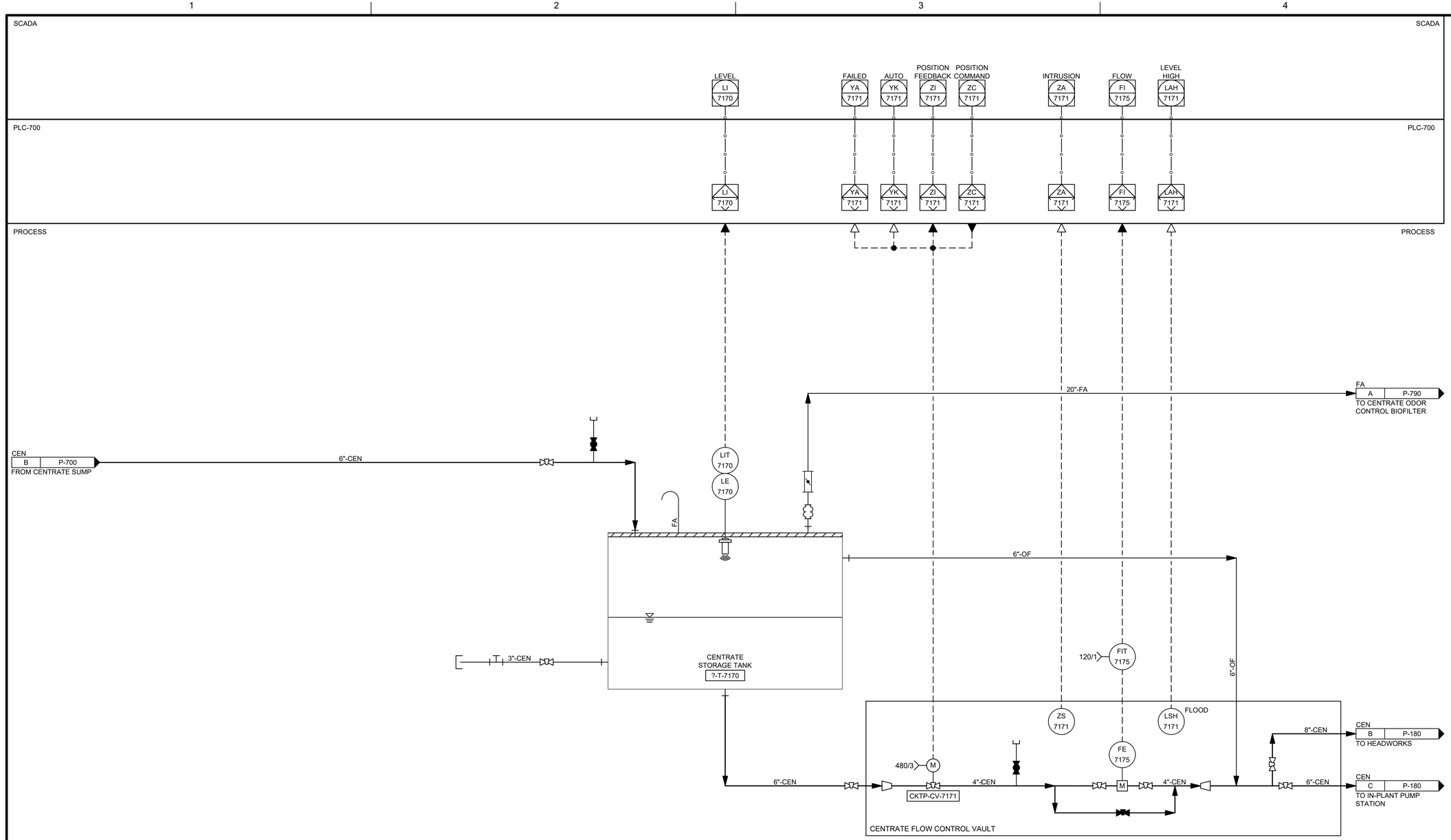

ISSUE	DATE	DESCRIPTION

PROJECT MANAGER	**Andrew Staples**
Design Manager	**J. Zahller**
Civil	**J. Becker**
Structural	**M. Hijazi**
Process	**J. Zahller**
Mechanical	**K. Sutton**
Electrical/Instrumentation	**L. Kirmeyer / J. McReynolds**
Contract No.	
PROJECT NUMBER	**10367638**

PROCESS:

JEFFREY D. ZAHLLER STATE OF WASHINGTON 44824 REGISTERED PROFESSIONAL ENGINEER

PRELIMINARY

12/07/23

INSTRUMENTATION:

JOEL H. MCREYNOLDS STATE OF WASHINGTON 20100328 REGISTERED PROFESSIONAL ENGINEER

PRELIMINARY

12/07/23

KITSAP COUNTY

CENTRAL KITSAP TREATMENT PLANT

PROCESS AND INSTRUMENTATION DIAGRAMS

CENTRATE STORAGE TANK

0 1" 2"

FILENAME	
SCALE	

SHEET **P-701**

GENERAL NOTES:

1. ALL ETHERNET SWITCHES TO BE MANAGED, WITH SEPARATE VLANS SET UP FOR NETWORK MANAGEMENT, POWER MONITORING, AND CONTROL NETWORKS. ENSURE THAT EACH DEVICE IS CONNECTED TO THE APPROPRIATE VLAN.

KEYNOTES: (X)

1. ITEMS ON THIS NETWORK ARE TO BE CONNECTED IN A FAULT TOLERANT DEVICE-LEVEL RING SUCH THAT THE FAILURE OF ANY SINGLE DEVICE WILL STILL ALLOW ALL OTHER DEVICES TO CONTINUE TO COMMUNICATE NORMALLY.

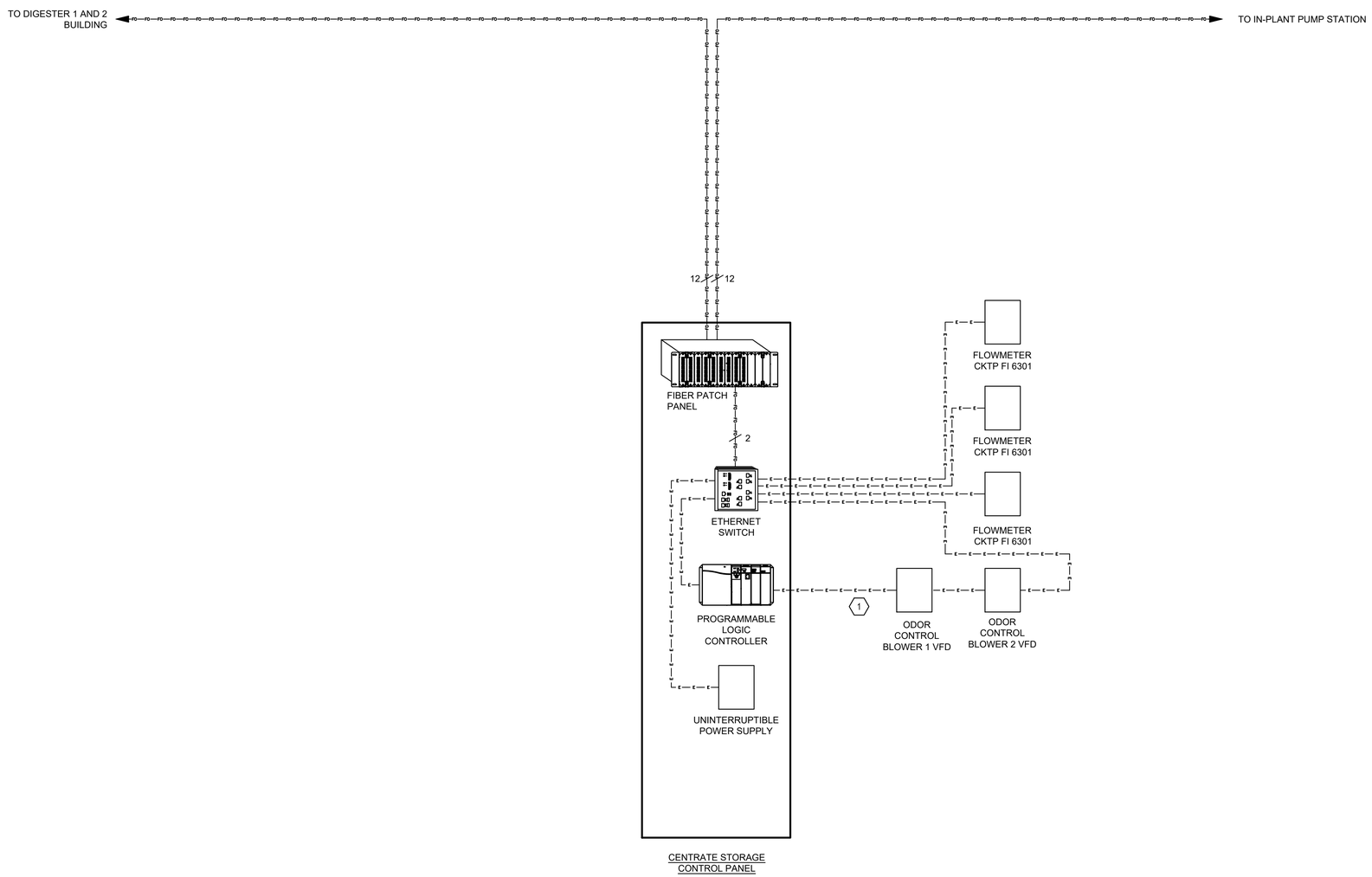

LEGEND

- CAT 6 CABLE
- FIBER OPTIC
- SERIAL CABLE
- # OR # — NUMBER OF FIBER OPTIC STRANDS
- EQUIPMENT AND STRUCTURES INSTALLED UNDER THIS CONTRACT
- EXISTING EQUIPMENT AND STRUCTURES

ISSUE	DATE	DESCRIPTION

PROJECT MANAGER	Andrew Staples
Design Manager	J. Zahller
Civil	J. Becker
Structural	M. Hijazi
Process	J. Zahller
Mechanical	K. Sutton
Electrical/Instrumentation	L. Kirmeyer / J. McReynolds
Contract No.	
PROJECT NUMBER	10367638

PROCESS: JEFFREY D. ZAHLLER, STATE OF WASHINGTON, 44824, REGISTERED PROFESSIONAL ENGINEER — PRELIMINARY — 12/07/23

INSTRUMENTATION: JOEL H. MCREYNOLDS, STATE OF WASHINGTON, 20100328, REGISTERED PROFESSIONAL ENGINEER — PRELIMINARY — 12/07/23

KITSAP COUNTY

CENTRAL KITSAP TREATMENT PLANT

PROCESS AND INSTRUMENTATION DIAGRAM

CENTRATE STORAGE NETWORK DIAGRAM

0 1" 2"

FILENAME

SCALE

SHEET P-708

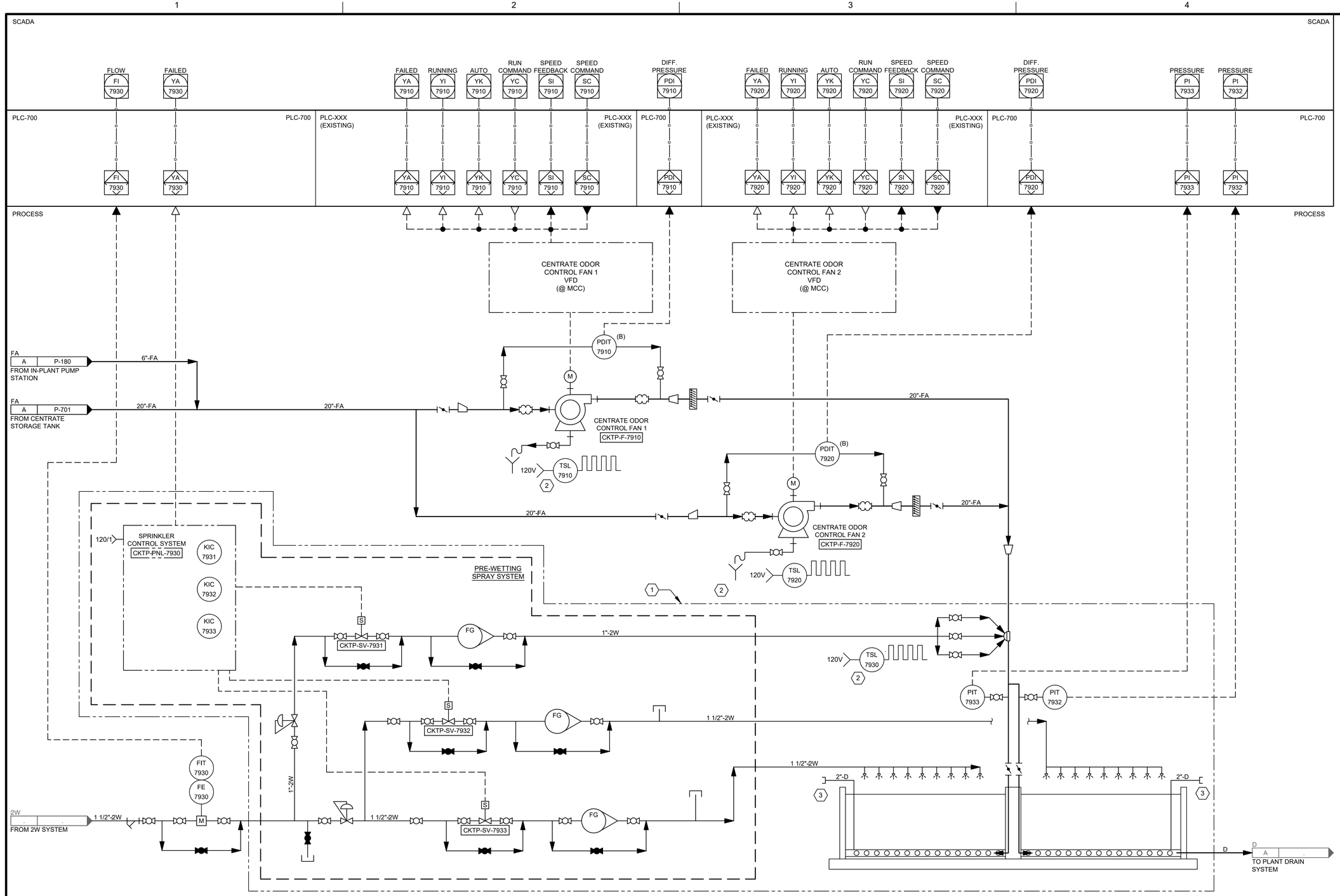

GENERAL NOTES:

1. (B) DENOTES INSTRUMENTATION PROVIDED BY FAN VENDOR.

KEYNOTES:

1. ITEMS WITHIN THE DASHED AREA ARE TO BE PROVIDED BY THE BIOFILTER SUPPLIER, SEE SPECIFICATION 44 31 21.
2. HEAT TRACE AND INSULATE MAIN ODOR CONTROL FAN DRAINS TO BE ROUTED TO BIOFILTER. DUCT DRAINS TO BE ROUTED TO THE NEAREST FLOOR DRAIN.
3. FLUSH PORT. TYPICAL ON EACH AIR DISTRIBUTION LATERAL.

ISSUE	DATE	DESCRIPTION

PROJECT MANAGER	Andrew Staples
Design Manager	J. Zahller
Civil	J. Becker
Structural	M. Hijazi
Process	J. Zahller
Mechanical	K. Sutton
Electrical/Instrumentation	L. Kirmeyer / J. McReynolds
Contract No.	
PROJECT NUMBER	10367638

PROCESS: JEFFREY D. ZAHLLER, STATE OF WASHINGTON, 44824, REGISTERED PROFESSIONAL ENGINEER — PRELIMINARY — 12/07/23

INSTRUMENTATION: JOEL H. MCREYNOLDS, STATE OF WASHINGTON, 20100328, REGISTERED PROFESSIONAL ENGINEER — PRELIMINARY — 12/07/23

KITSAP COUNTY

CENTRAL KITSAP TREATMENT PLANT

PROCESS AND INSTRUMENTATION DIAGRAMS

CENTRATE STORAGE ODOR CONTROL

0 1" 2"

FILENAME

SCALE

SHEET P-790

Appendix G. Electrical One-Line Diagrams

NOTES:

1. COGEN SYSTEM INTERFACE NOT SHOWN.
2. FIVE BREAKER TRANSFER SCHEME NOT DETAILED HERE.
3. KIRK KEY SCHEMES NOT DETAILED HERE.
4. EXISTING CONDITIONS....

KEY NOTES:

1. SHUNT TRIP TO COGEN SYSTEM.
2. KIRK-KEY INTERLOCK SYSTEM.
3. KIRK-KEY INTERLOCK SYSTEM.
4. REMOVE CONDUCTORS. REMOVE MCC 2. CONVERT CIRCUIT BREAKER TO SPARE; PROVIDE NEW NAMEPLATE: "SPARE".
5. CONVERT EXISTING SPARE BREAKER INTO FEEDER BREAKER.
6. CONVERT EXISTING SPARE BREAKER INTO FEEDER BREAKER.
7. KIRK-KEY INTERLOCK SYSTEM.
8. REMOVE CONDUCTORS BETWEEN GENERATOR TERMINAL BOX AND SWITCHBOARD. RETAIN EXISTING CONDUITS FOR REUSE.
9. REMOVE EXISTING GENERATOR TERMINAL BOX AND SALVAGE TO OWNER.
10. CONVERT EXISTING SPARE BREAKER INTO FEEDER BREAKER.
11. REUSE EXISTING BREAKER FOR NEW FEEDER.

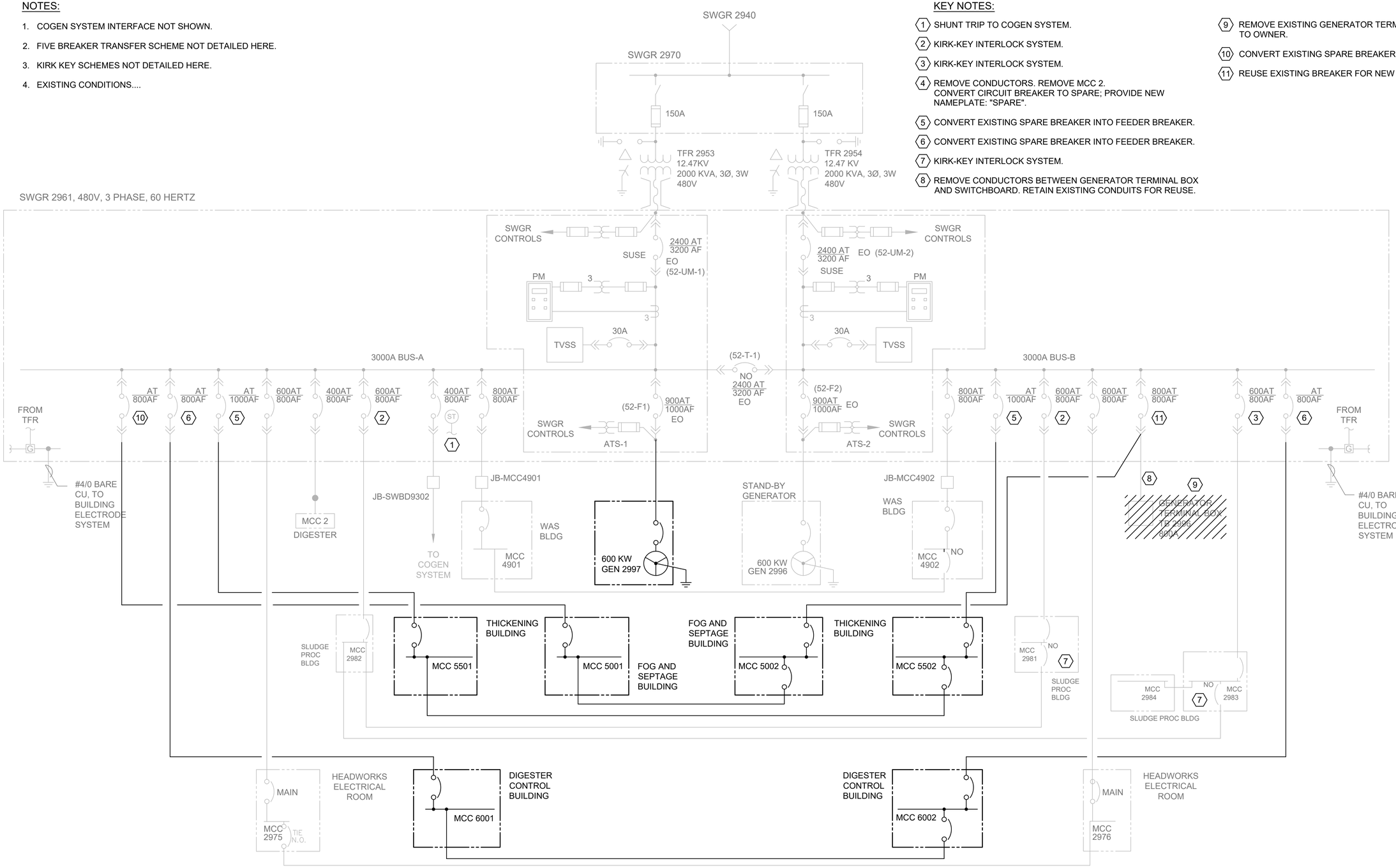

NO	REVISION DESCRIPTION	BY	APVD	DATE

HDR PROJECT NO.

DESIGNED/DRAWN: E PILAPIL	SCALE: NONE
DESIGN ENGINEER: L KIRMEYER	WORK ORDER: -
PROJECT ENGINEER: -	PROJECT NO: -
	CONTRACT NO:

CENTRAL KITSAP TREATMENT PLANT
SOLIDS AND LIQUID HAULED WASTE UPGRADE

SLUDGE PROCESSING BUILDING ONE LINE DIAGRAM

DATE: OCTOBER 2023
DRAWING NO: - 500-E050
SHT NO / TOTAL: -
REV NO: -

C:\Users\epilapil\DC\ACCDocs\HDR\10367638_CKTP_Solids_and_Liquid_Hauled_Waste_Upgrades_2022\Project Files\HDR_Sheets\500-E050.dwg 11/10/2023 3:32:01 PM

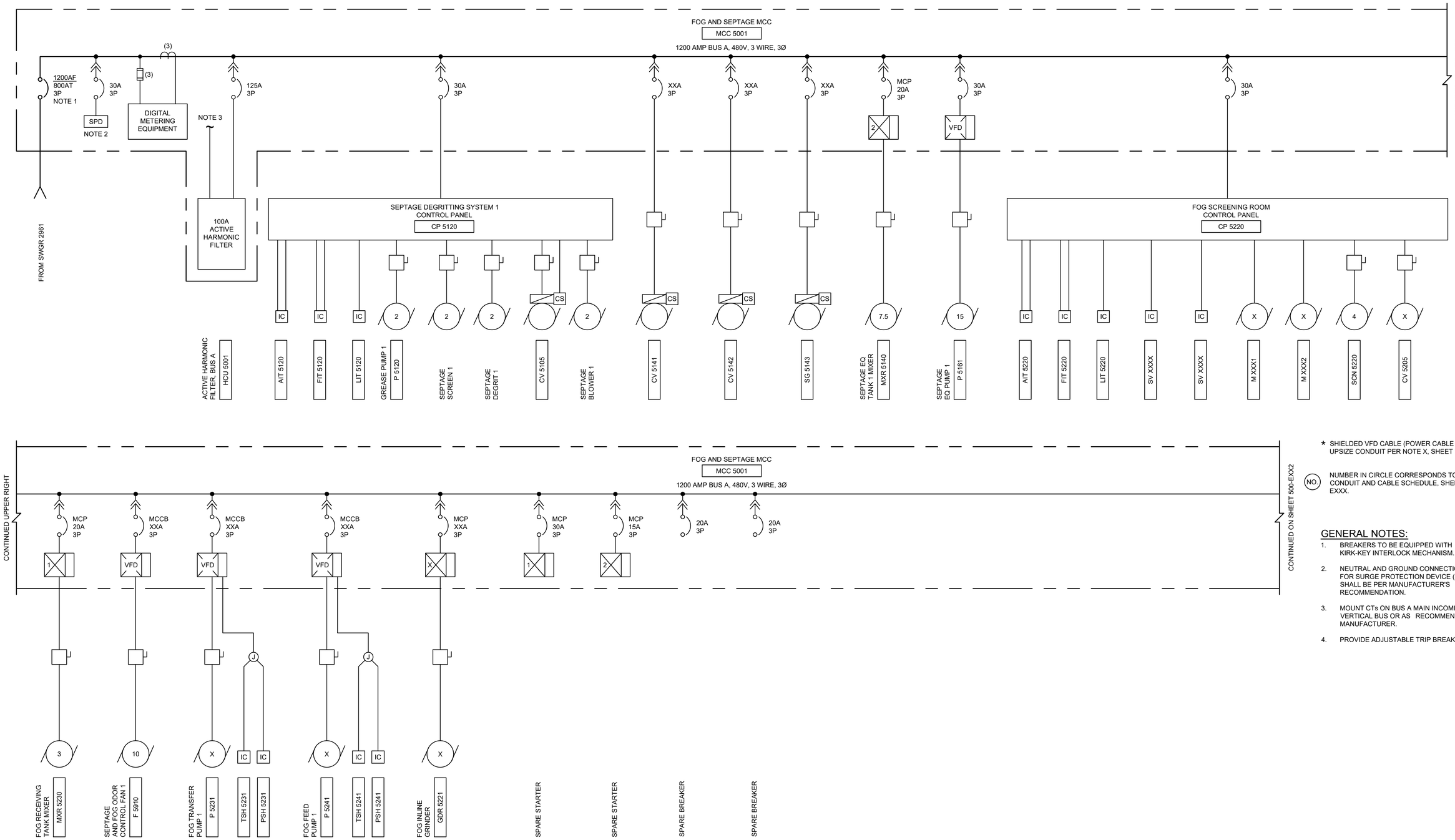

* SHIELDED VFD CABLE (POWER CABLE ONLY); UPSIZE CONDUIT PER NOTE X, SHEET EXXX.

(NO.) NUMBER IN CIRCLE CORRESPONDS TO CONDUIT AND CABLE SCHEDULE, SHEET EXXX.

GENERAL NOTES:

1. BREAKERS TO BE EQUIPPED WITH KIRK-KEY INTERLOCK MECHANISM.
2. NEUTRAL AND GROUND CONNECTIONS FOR SURGE PROTECTION DEVICE (SPD) SHALL BE PER MANUFACTURER'S RECOMMENDATION.
3. MOUNT CTs ON BUS A MAIN INCOMING VERTICAL BUS OR AS RECOMMENDED BY MANUFACTURER.
4. PROVIDE ADJUSTABLE TRIP BREAKER.

NO	REVISION DESCRIPTION	BY	APVD	DATE

HDR PROJECT NO.

DESIGNED/DRAWN: E PILAPIL	SCALE: NONE
DESIGN ENGINEER: L KIRMEYER	WORK ORDER: -
PROJECT ENGINEER: -	PROJECT NO: -
	CONTRACT NO:

CENTRAL KITSAP TREATMENT PLANT
SOLIDS AND LIQUID HAULED WASTE UPGRADE

ELECTRICAL MCC 5001 ONE LINE DIAGRAM

DATE: OCTOBER 2023
DRAWING NO: - 500-EXX1
SHT NO / TOTAL: -
REV NO: -

C:\Users\epilapil\DC\ACCDocs\HDR\10367838_CKTP_Solids_and_Liquid_Hauled_Waste_Upgrades_2022\Project Files\HDR_Sheets\500-EXX1.dwg 11/17/2023 3:18:40 PM

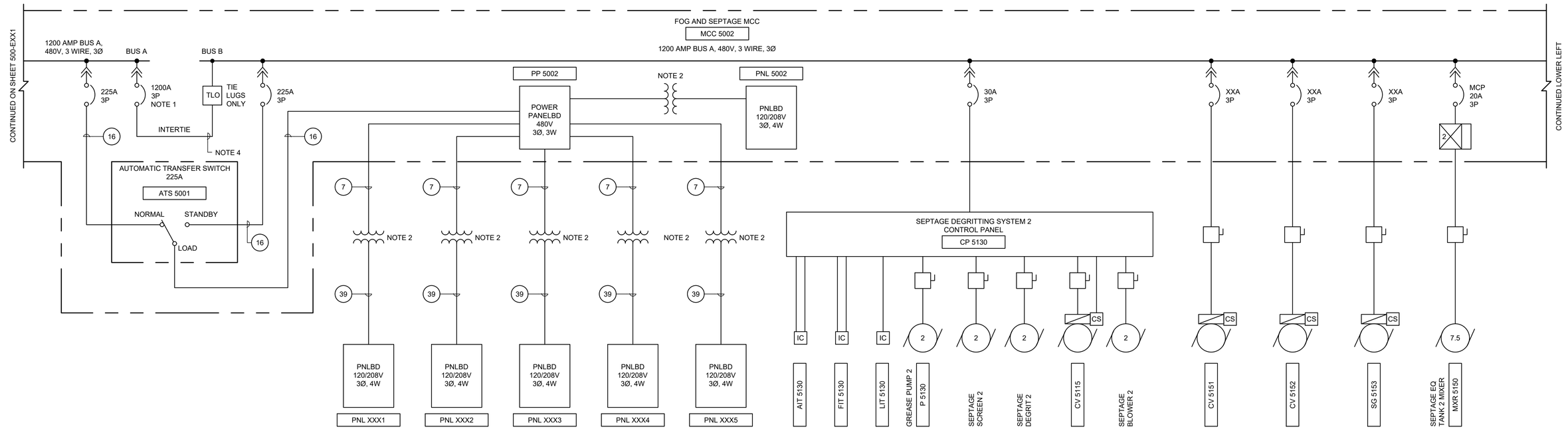

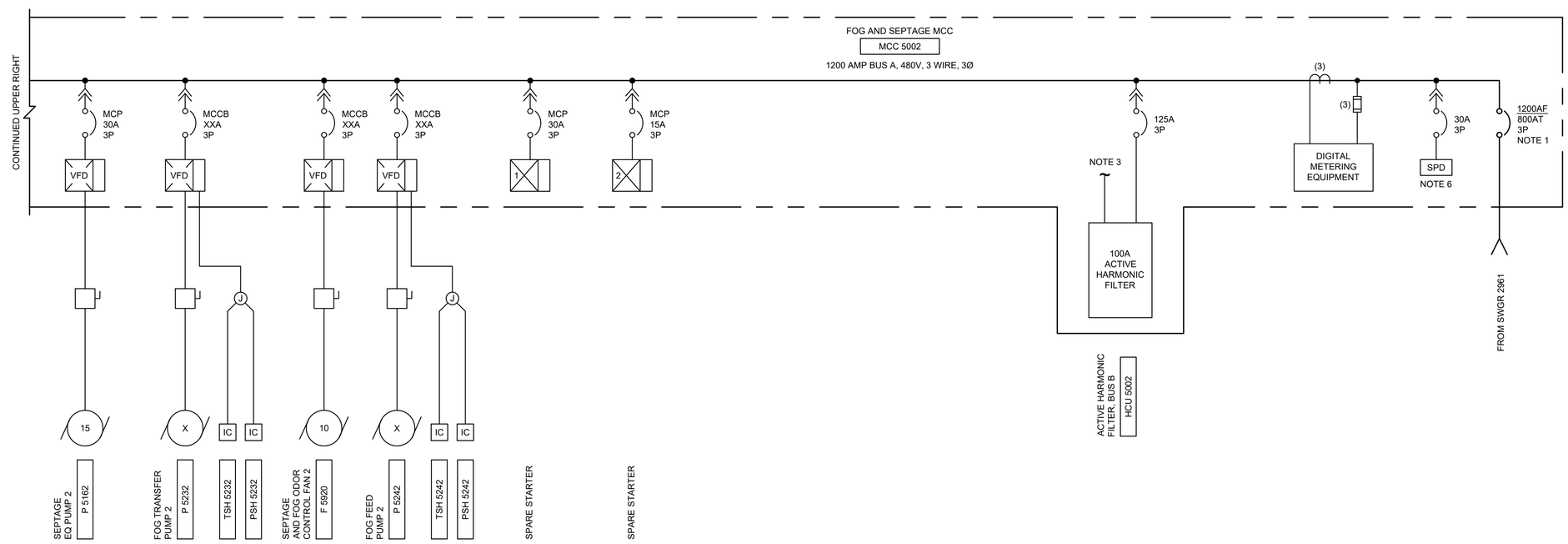

* SHIELDED VFD CABLE (POWER CABLE ONLY); UPSIZE CONDUIT PER NOTE X, SHEET EXXX.

(NO.) NUMBER IN CIRCLE CORRESPONDS TO CONDUIT AND CABLE SCHEDULE, SHEET EXXX.

GENERAL NOTES:

1. BREAKERS TO BE EQUIPPED WITH KIRK-KEY INTERLOCK MECHANISM.
2. 30 kVA, 3Ø, 480-120/208V. TAG NUMBERS SHALL BE XFMR-YYYY, WHERE "YYYY" IS THE SAME NUMBER AS THE PANEL SERVED.
3. MOUNT CTs ON BUS A MAIN INCOMING VERTICAL BUS OR AS RECOMMENDED BY MANUFACTURER.
4. THREE SETS OF THE FOLLOWING: 4#600 KCM PLUS 1#250 KCM GROUND.
5. PROVIDE ADJUSTABLE TRIP BREAKER.
6. NEUTRAL AND GROUND CONNECTIONS FOR SURGE PROTECTION DEVICE (SPD) SHALL BE PER MANUFACTURER'S RECOMMENDATION.

NO	REVISION DESCRIPTION	BY	APVD	DATE

HDR PROJECT NO.

DESIGNED/DRAWN: E PILAPIL	SCALE: NONE
DESIGN ENGINEER: L KIRMEYER	WORK ORDER: -
PROJECT ENGINEER: -	PROJECT NO: -
	CONTRACT NO:

CENTRAL KITSAP TREATMENT PLANT
SOLIDS AND LIQUID HAULED WASTE UPGRADE

ELECTRICAL MCC 5002 ONE LINE DIAGRAM

DATE: OCTOBER 2023
DRAWING NO: - 500-EXX2
SHT NO - / TOTAL - REV NO: -

C:\Users\epilapil\DC\ACCDocs\HDR\10367638_CKTP_Solids_and_Liquid_Hauled_Waste_Upgrades_2022\Project Files\HDR_Sheets\500-EXX2.dwg 11/17/2023 3:20:05 PM

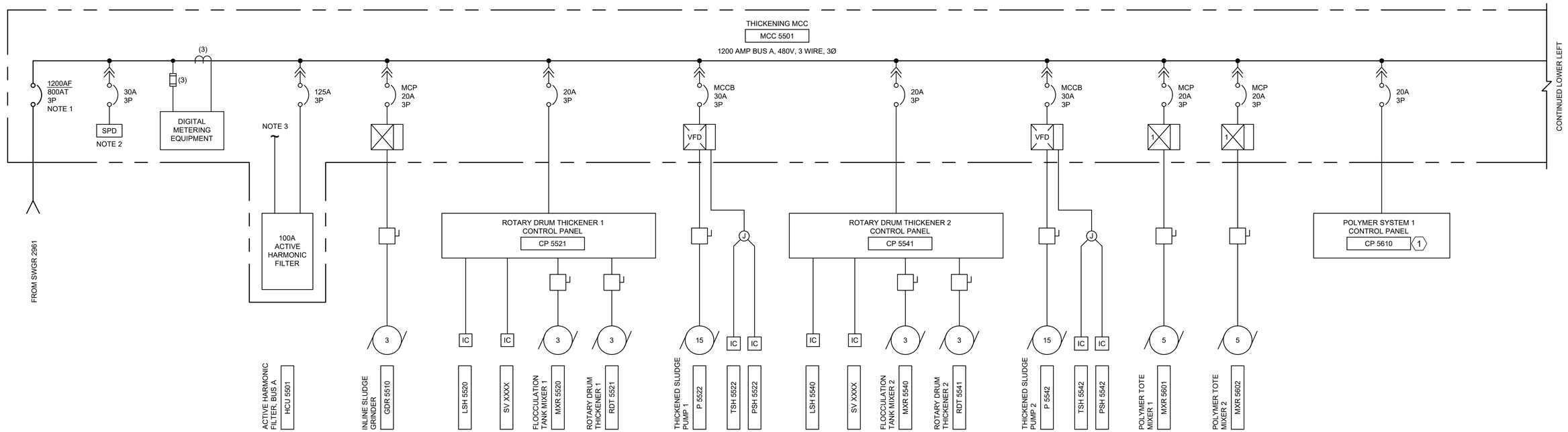

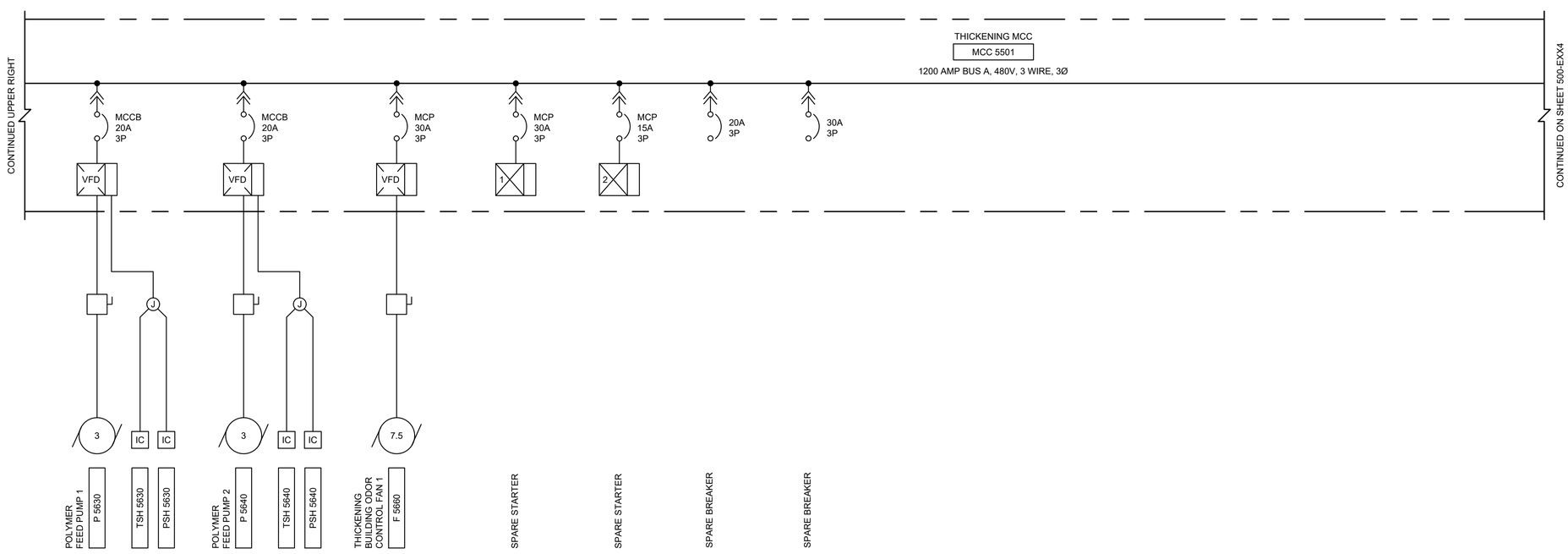

* SHIELDED VFD CABLE (POWER CABLE ONLY); UPSIZE CONDUIT PER NOTE X, SHEET EXXX.

(NO.) NUMBER IN CIRCLE CORRESPONDS TO CONDUIT AND CABLE SCHEDULE, SHEET EXXX.

GENERAL NOTES:

1. BREAKERS TO BE EQUIPPED WITH KIRK-KEY INTERLOCK MECHANISM.
2. NEUTRAL AND GROUND CONNECTIONS FOR SURGE PROTECTION DEVICE (SPD) SHALL BE PER MANUFACTURER'S RECOMMENDATION.
3. MOUNT CTs ON BUS A MAIN INCOMING VERTICAL BUS OR AS RECOMMENDED BY MANUFACTURER.
4. PROVIDE ADJUSTABLE TRIP BREAKER.

KEYNOTES:

(1) EQUIPMENT AND INSTRUMENTS LOCATED ON POLYMER SYSTEM ARE NOT SHOWN BUT SHALL BE PRE-WIRED TO POLYMER SYSTEM CONTROL PANEL.

NO	REVISION DESCRIPTION	BY	APVD	DATE

HDR PROJECT NO.

DESIGNED/DRAWN: E PILAPIL	SCALE: NONE
DESIGN ENGINEER: L KIRMEYER	WORK ORDER: -
PROJECT ENGINEER: -	PROJECT NO: -
	CONTRACT NO:

CENTRAL KITSAP TREATMENT PLANT
SOLIDS AND LIQUID HAULED WASTE UPGRADE

ELECTRICAL MCC 5501 ONE LINE DIAGRAM

DATE: OCTOBER 2023
DRAWING NO: - 500-EXX3
SHT NO / TOTAL: -
REV NO: -

C:\Users\epilapil\DC\ACCDocs\HDR\10367838_CKTP_Solids_and_Liquid_Hauled_Waste_Upgrades_2022\Project Files\HDR_Sheets\500-EXX3.dwg 11/17/2023 3:21:34 PM

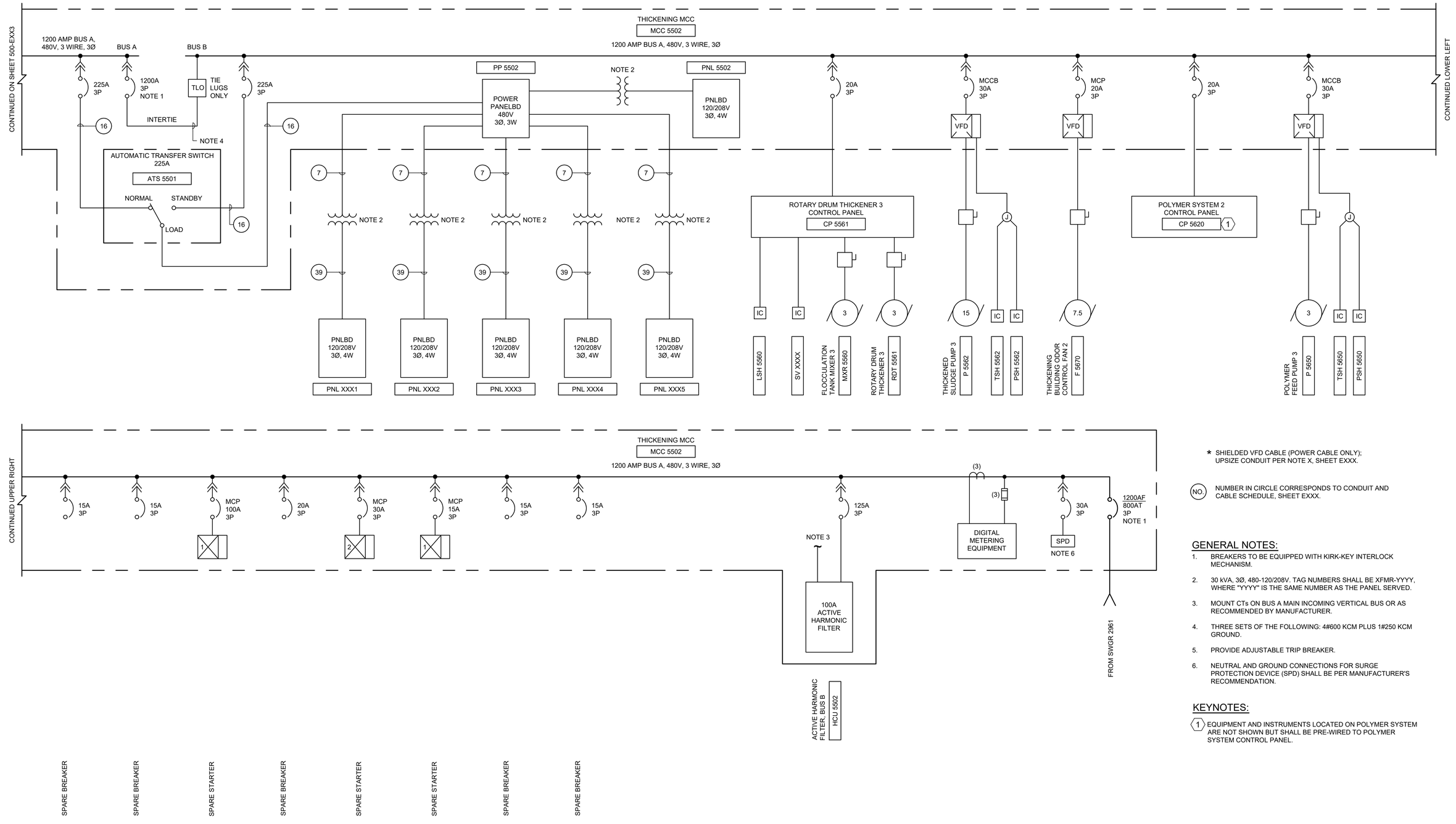

* SHIELDED VFD CABLE (POWER CABLE ONLY); UPSIZE CONDUIT PER NOTE X, SHEET EXXX.

(NO.) NUMBER IN CIRCLE CORRESPONDS TO CONDUIT AND CABLE SCHEDULE, SHEET EXXX.

GENERAL NOTES:

1. BREAKERS TO BE EQUIPPED WITH KIRK-KEY INTERLOCK MECHANISM.
2. 30 kVA, 3Ø, 480-120/208V. TAG NUMBERS SHALL BE XFMR-YYYY, WHERE "YYYY" IS THE SAME NUMBER AS THE PANEL SERVED.
3. MOUNT CTs ON BUS A MAIN INCOMING VERTICAL BUS OR AS RECOMMENDED BY MANUFACTURER.
4. THREE SETS OF THE FOLLOWING: 4#600 KCM PLUS 1#250 KCM GROUND.
5. PROVIDE ADJUSTABLE TRIP BREAKER.
6. NEUTRAL AND GROUND CONNECTIONS FOR SURGE PROTECTION DEVICE (SPD) SHALL BE PER MANUFACTURER'S RECOMMENDATION.

KEYNOTES:

(1) EQUIPMENT AND INSTRUMENTS LOCATED ON POLYMER SYSTEM ARE NOT SHOWN BUT SHALL BE PRE-WIRED TO POLYMER SYSTEM CONTROL PANEL.

NO	REVISION DESCRIPTION	BY	APVD	DATE

HDR PROJECT NO.

DESIGNED/DRAWN: E PILAPIL	SCALE: NONE
DESIGN ENGINEER: L KIRMEYER	WORK ORDER: -
PROJECT ENGINEER: -	PROJECT NO: -
	CONTRACT NO:

CENTRAL KITSAP TREATMENT PLANT
SOLIDS AND LIQUID HAULED WASTE UPGRADE

ELECTRICAL MCC 5502 ONE LINE DIAGRAM

DATE: OCTOBER 2023
DRAWING NO: - 500-EXX4
SHT NO / TOTAL: -
REV NO: -

C:\Users\epilapil\DC\ACCDocs\HDR\10367638_CKTP_Solids_and_Liquid_Hauled_Waste_Upgrades_2022\Project Files\HDR_Sheets\500-EXX4.dwg 11/17/2023 3:23:10 PM

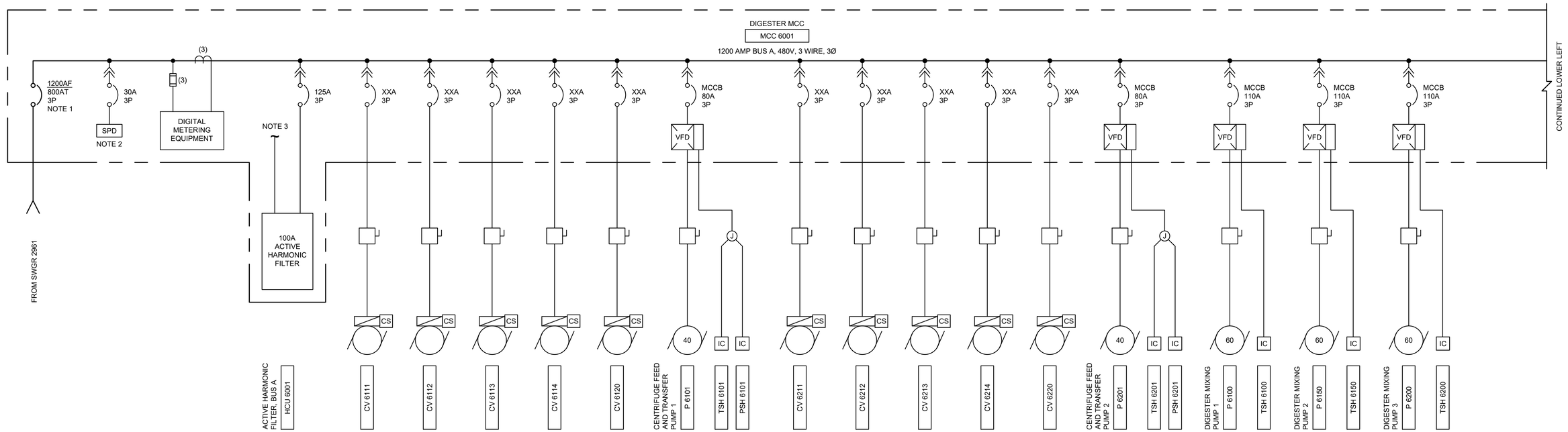

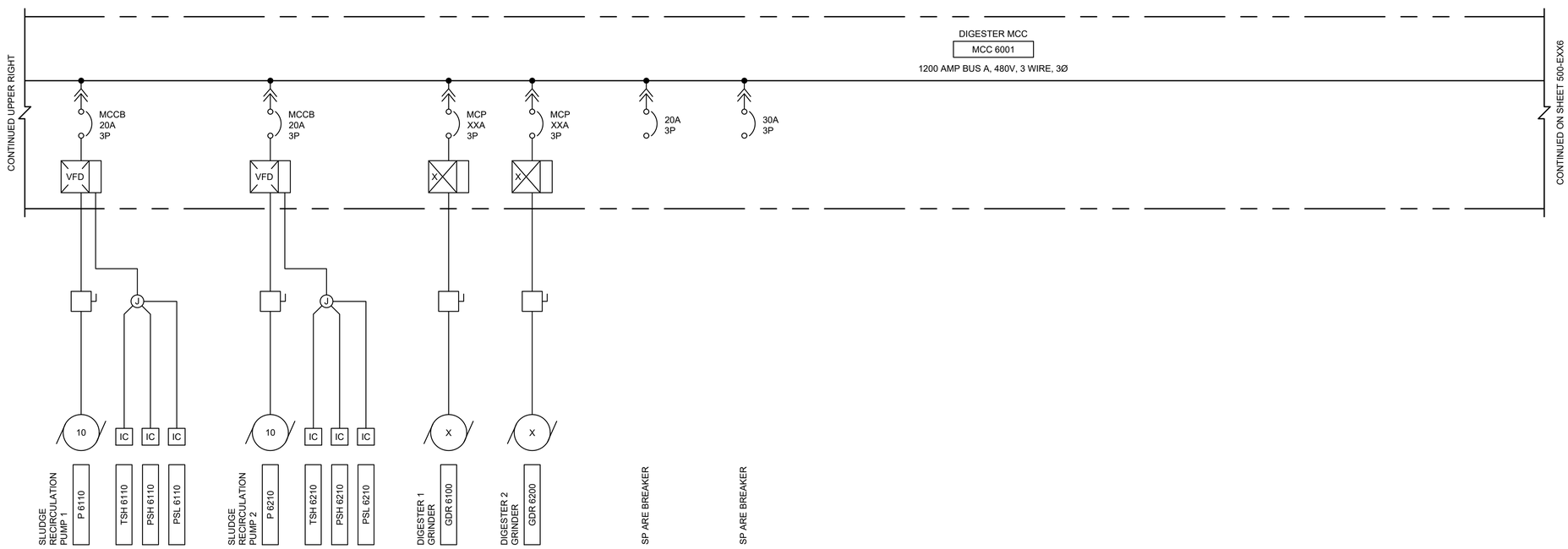

* SHIELDED VFD CABLE (POWER CABLE ONLY); UPSIZE CONDUIT PER NOTE X, SHEET EXXX.

(NO.) NUMBER IN CIRCLE CORRESPONDS TO CONDUIT AND CABLE SCHEDULE, SHEET EXXX.

GENERAL NOTES:

1. BREAKERS TO BE EQUIPPED WITH KIRK-KEY INTERLOCK MECHANISM.
2. NEUTRAL AND GROUND CONNECTIONS FOR SURGE PROTECTION DEVICE (SPD) SHALL BE PER MANUFACTURER'S RECOMMENDATION.
3. MOUNT CTs ON BUS A MAIN INCOMING VERTICAL BUS OR AS RECOMMENDED BY MANUFACTURER.

NO	REVISION DESCRIPTION	BY	APVD	DATE

HDR PROJECT NO.

DESIGNED/DRAWN: E PILAPIL	SCALE: NONE
DESIGN ENGINEER: L KIRMEYER	WORK ORDER: -
PROJECT ENGINEER: -	PROJECT NO: -
	CONTRACT NO:

CENTRAL KITSAP TREATMENT PLANT
SOLIDS AND LIQUID HAULED WASTE UPGRADE

ELECTRICAL MCC 6001 ONE LINE DIAGRAM

DATE: OCTOBER 2023
DRAWING NO: - 500-EXX5
SHT NO / TOTAL: -
REV NO: -

C:\Users\epilapil\DC\ACCDocs\HDR\10367838_CKTP_Solids_and_Liquid_Hauled_Waste_Upgrades_2022\Project Files\HDR_Sheets\500-EXX5.dwg 11/17/2023 3:24:51 PM

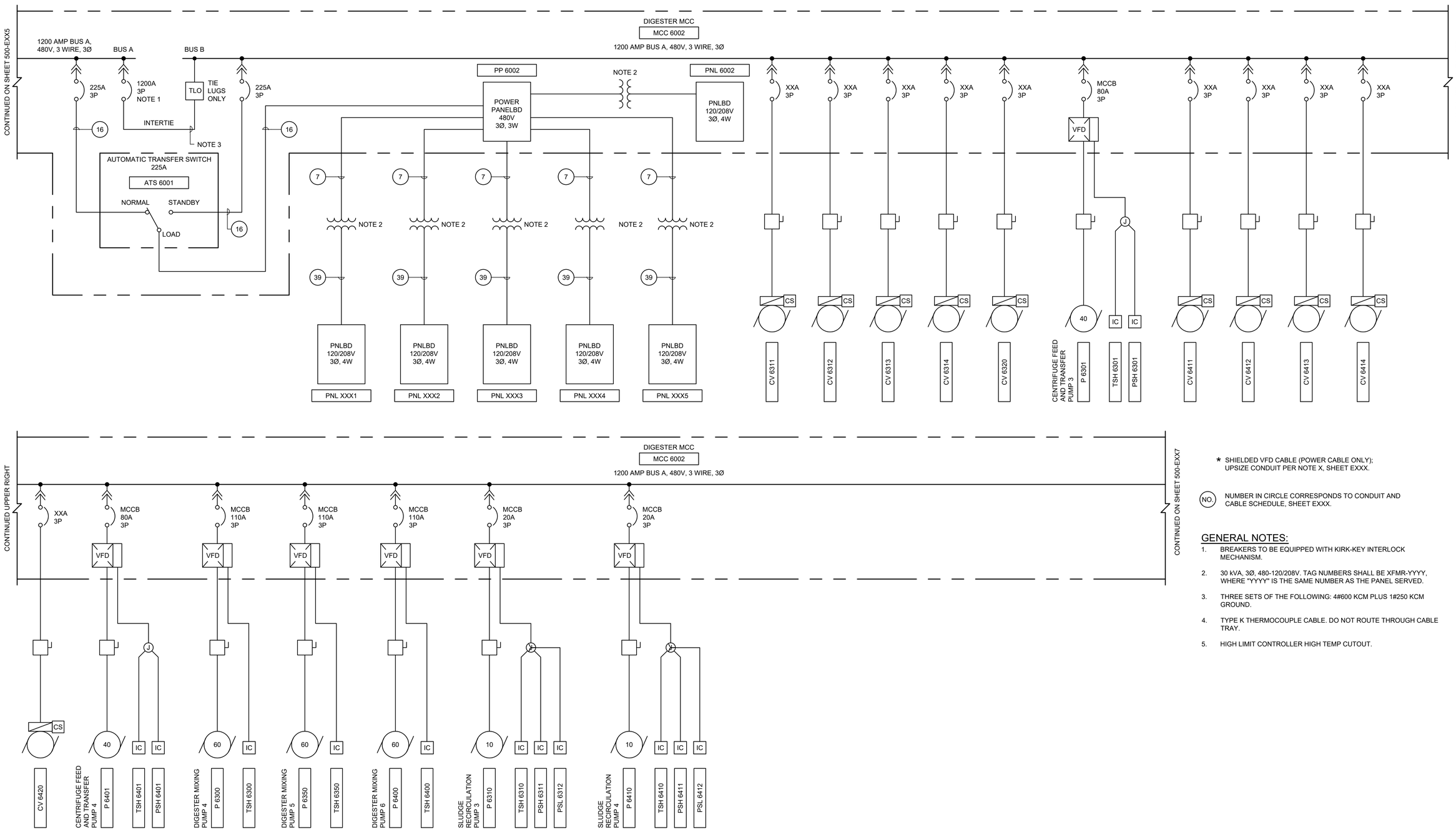

* SHIELDED VFD CABLE (POWER CABLE ONLY); UPSIZE CONDUIT PER NOTE X, SHEET EXXX.

(NO.) NUMBER IN CIRCLE CORRESPONDS TO CONDUIT AND CABLE SCHEDULE, SHEET EXXX.

GENERAL NOTES:

1. BREAKERS TO BE EQUIPPED WITH KIRK-KEY INTERLOCK MECHANISM.
2. 30 kVA, 3Ø, 480-120/208V. TAG NUMBERS SHALL BE XFMR-YYYY, WHERE "YYYY" IS THE SAME NUMBER AS THE PANEL SERVED.
3. THREE SETS OF THE FOLLOWING: 4#600 KCM PLUS 1#250 KCM GROUND.
4. TYPE K THERMOCOUPLE CABLE. DO NOT ROUTE THROUGH CABLE TRAY.
5. HIGH LIMIT CONTROLLER HIGH TEMP CUTOUT.

NO	REVISION DESCRIPTION	BY	APVD	DATE

HDR PROJECT NO.

DESIGNED/DRAWN: E PILAPIL
DESIGN ENGINEER: L KIRMEYER
PROJECT ENGINEER: -
SCALE: NONE
WORK ORDER: -
PROJECT NO: -
CONTRACT NO:

CENTRAL KITSAP TREATMENT PLANT
SOLIDS AND LIQUID HAULED WASTE UPGRADE

ELECTRICAL MCC 6002 ONE LINE DIAGRAM I

DATE: OCTOBER 2023
DRAWING NO: - 500-EXX6
SHT NO / TOTAL: -
REV NO: -

C:\Users\epilapil\DC\ACCDocs\HDR\10367638_CKTP_Solids_and_Liquid_Hauled_Waste_Upgrades_2022\Project Files\HDR_Sheets\500-EXX6.dwg 11/17/2023 12:36:31 PM

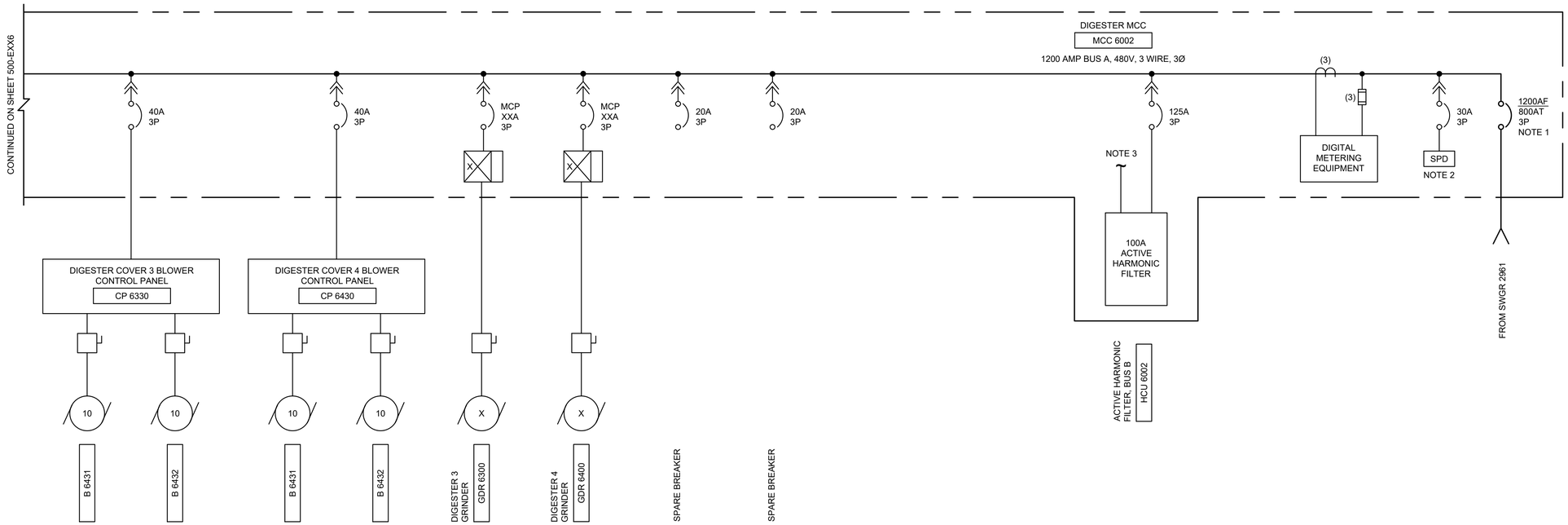

* SHIELDED VFD CABLE (POWER CABLE ONLY); UPSIZE CONDUIT PER NOTE X, SHEET EXXX.

(NO.) NUMBER IN CIRCLE CORRESPONDS TO CONDUIT AND CABLE SCHEDULE, SHEET EXXX.

GENERAL NOTES:

1. BREAKERS TO BE EQUIPPED WITH KIRK-KEY INTERLOCK MECHANISM.
2. NEUTRAL AND GROUND CONNECTIONS FOR SURGE PROTECTION DEVICE (SPD) SHALL BE PER MANUFACTURER'S RECOMMENDATION.
3. MOUNT CTs ON BUS A MAIN INCOMING VERTICAL BUS OR AS RECOMMENDED BY MANUFACTURER.

NO	REVISION DESCRIPTION	BY	APVD	DATE

HDR PROJECT NO.

DESIGNED/DRAWN: E PILAPIL
DESIGN ENGINEER: L KIRMEYER
PROJECT ENGINEER: -
SCALE: NONE
WORK ORDER: -
PROJECT NO: -
CONTRACT NO:

CENTRAL KITSAP TREATMENT PLANT
SOLIDS AND LIQUID HAULED WASTE UPGRADE

ELECTRICAL MCC 6002
ONE LINE DIAGRAM II

DATE: OCTOBER 2023
DRAWING NO: - 500-EXX7
SHT NO / TOTAL: -
REV NO: -

C:\Users\epilapil\DC\ACCDocs\HDR\10367638_CKTP_Solids_and_Liquid_Hauled_Waste_Upgrades_2022\Project Files\HDR_Sheets\500-EXX7.dwg 11/17/2023 3:26:59 PM

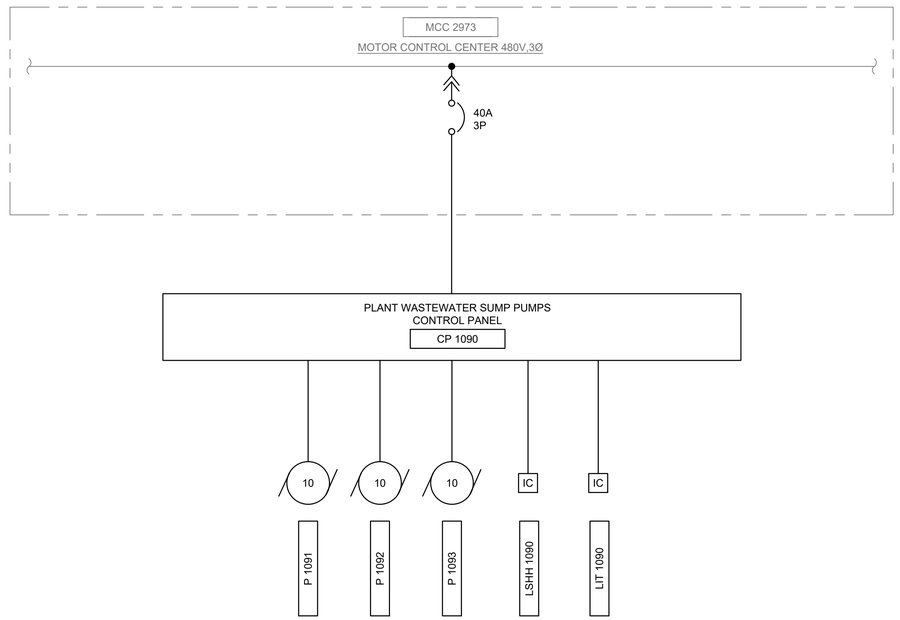

NO. NUMBER IN CIRCLE CORRESPONDS TO CONDUIT AND CABLE SCHEDULE; SEE SHEET EXXX.

GENERAL NOTES:

1. X

KEY NOTES:

1 X

NO	REVISION DESCRIPTION	BY	APVD	DATE

HDR PROJECT NO.

DESIGNED/DRAWN: E PILAPIL	SCALE: NONE
DESIGN ENGINEER: L KIRMEYER	WORK ORDER: -
PROJECT ENGINEER: -	PROJECT NO: -
	CONTRACT NO:

CENTRAL KITSAP TREATMENT PLANT
SOLIDS AND LIQUID HAULED WASTE UPGRADE

ELECTRICAL MCC 2973 PARTIAL ONE LINE DIAGRAM AND ELEVATION

DATE: OCTOBER 2023
DRAWING NO: - 500-EXX8
SHT NO - / TOTAL
REV NO: -

C:\Users\epilapil\DC\ACCDocs\HDR\10367638_CKTP_Solids_and_Liquid_Hauled_Waste_Upgrades_2022\Project Files\HDR_Sheets\500-EXX8.dwg 11/17/2023 12:42:31 PM

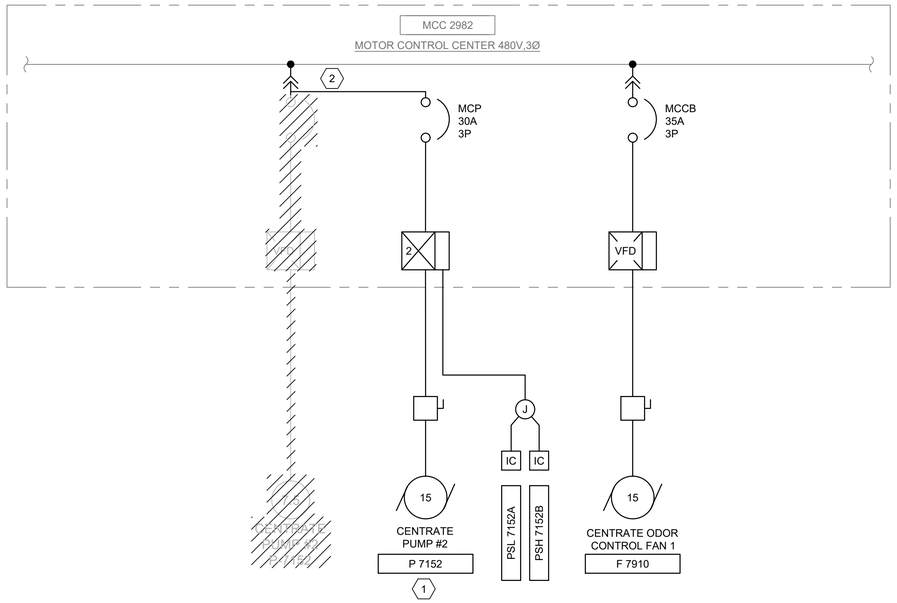

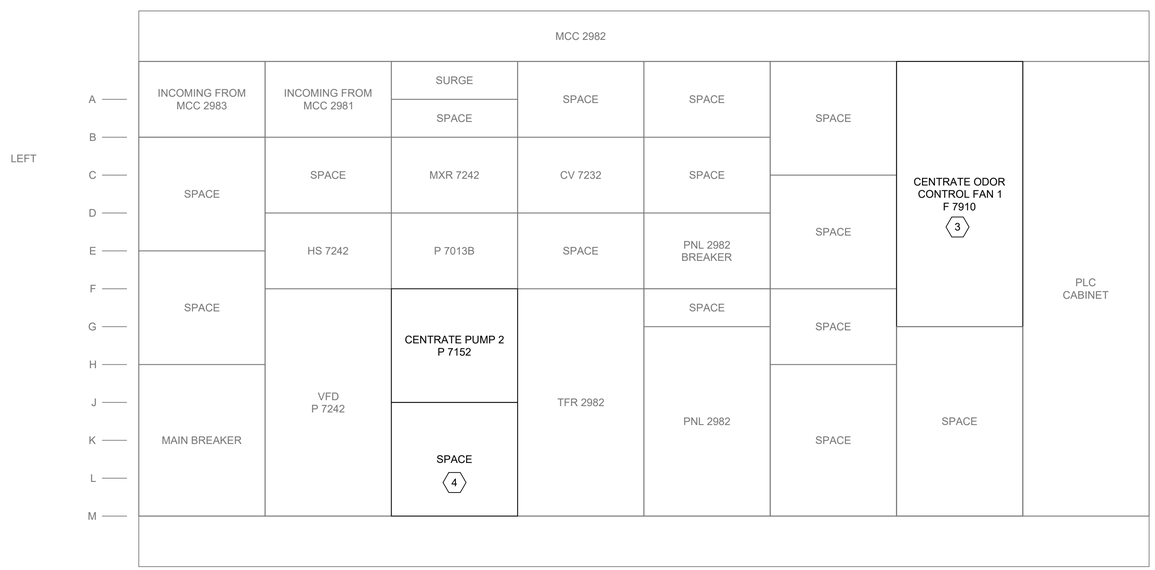

MOTOR CONTROL CENTER MCC 2982

NTS

NO. NUMBER IN CIRCLE CORRESPONDS TO CONDUIT AND CABLE SCHEDULE; SEE SHEET EXXX.

GENERAL NOTES:

1. EXISTING MCC 2982 IS AN EATON CUTLER-HAMMER FREEDOM SERIES 2100 MOTOR CONTROL CENTER.

KEY NOTES:

1. REMOVE EXISTING CENTRATE PUMP #2 AND RELOCATE TO NEW LOCATION AS PER ELECTRICAL PLANS. RETAIN EXISTING CONDUIT. CAP CONDUIT AND LABEL AS SPARE. REMOVE EXISTING WIRE BACK TO SOURCE AT MCC. PROVIDE NEW POWER CONDUIT AND WIRE BETWEEN MCC 2982 AND NEW DISCONNECT SWITCH. PROVIDE NEW POWER CONDUIT AND WIRE BETWEEN NEW DISCONNECT SWITCH NEW EQUIPMENT: CENTRATE PUMP 2, P7152.
2. REMOVE EXISTING MCC CUBICLE FOR CENTRATE PUMP #2. PROVIDE NEW MCC CUBICLE WITH NEW MOTOR STARTER.
3. PROVIDE NEW VFD IN NEW MCC CUBICLE IN EXISTING SPACE.
4. PROVIDE NEW DOOR FOR NEW SPACE.

NO	REVISION DESCRIPTION	BY	APVD	DATE

HDR PROJECT NO.

DESIGNED/DRAWN: E PILAPIL	SCALE: NONE
DESIGN ENGINEER: L KIRMEYER	WORK ORDER: -
PROJECT ENGINEER: -	PROJECT NO.: -
	CONTRACT NO:

CENTRAL KITSAP TREATMENT PLANT
SOLIDS AND LIQUID HAULED WASTE UPGRADE

ELECTRICAL MCC 2982 PARTIAL ONE LINE DIAGRAM AND ELEVATION

DATE: OCTOBER 2023
DRAWING NO: - 500-EXX9
SHT NO / TOTAL: -
REV NO: -

C:\Users\epilap\ID\ACCDocs\HDR\10367638_CKTP_Solids_and_Liquid_Hauled_Waste_Upgrades_2022\Project Files\HDR_Sheets\500-EXX9.dwg 11/17/2023 3:29:05 PM

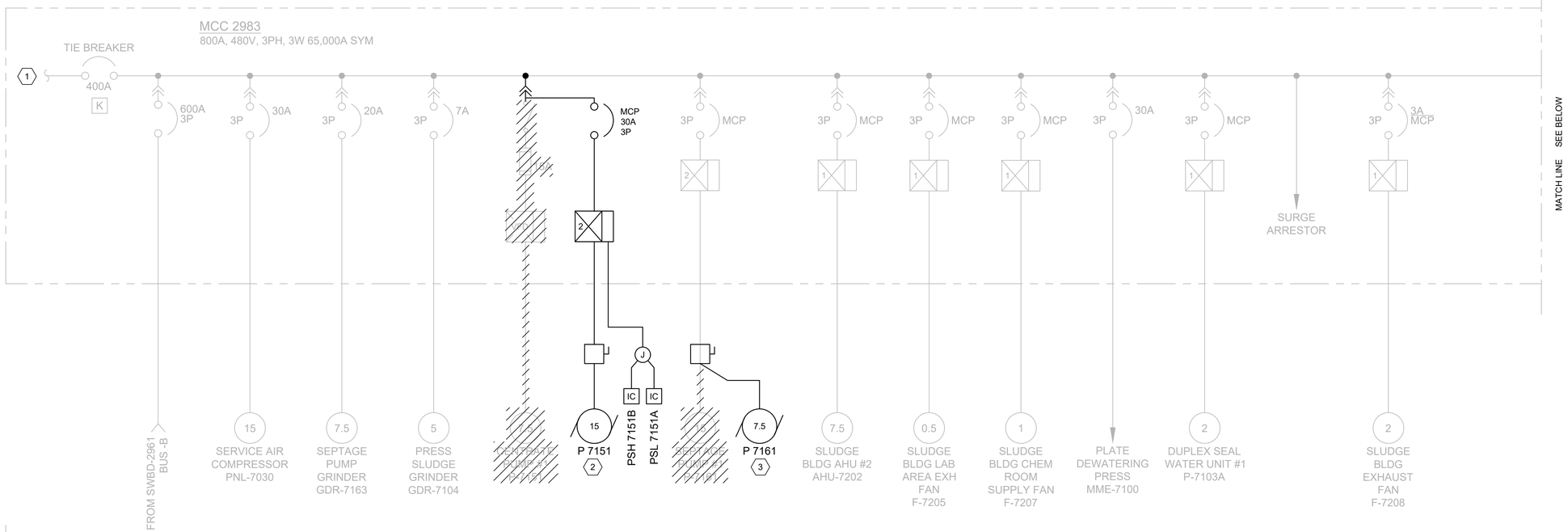

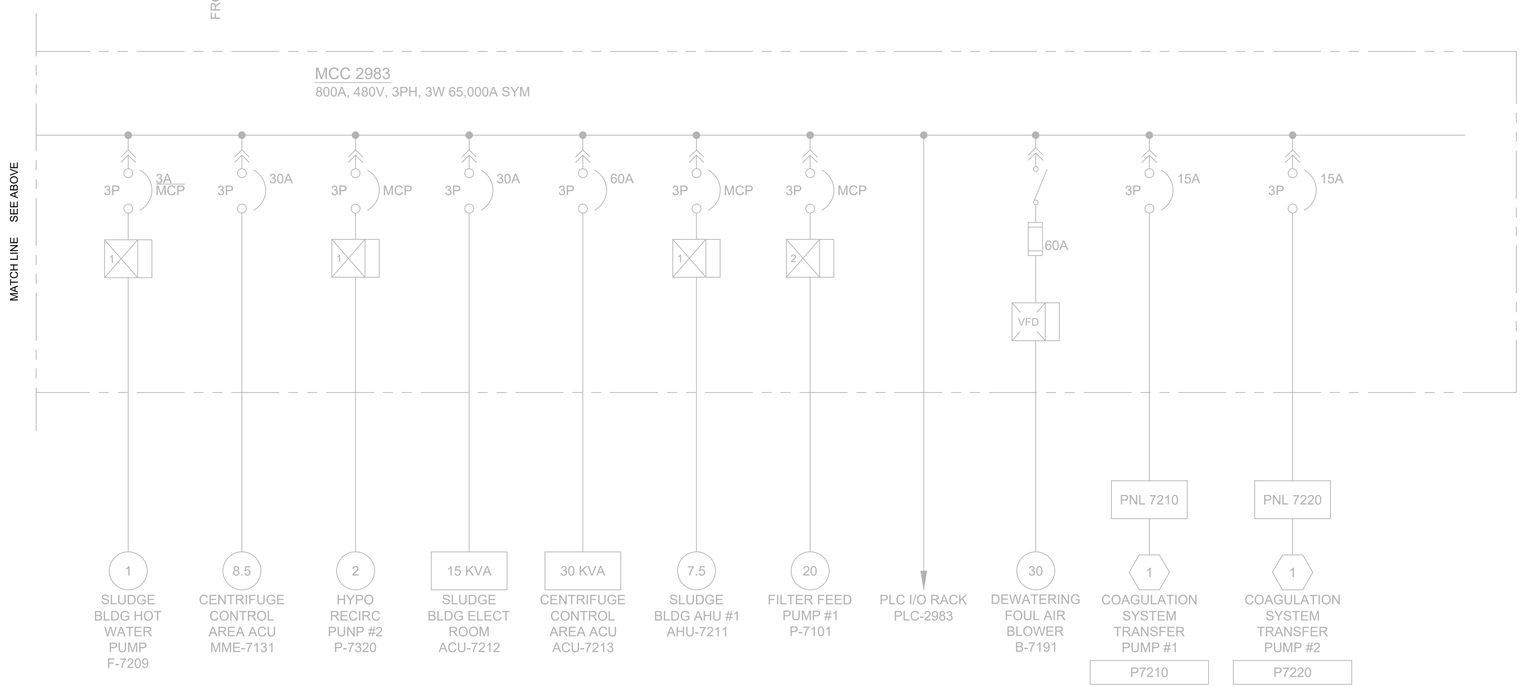

NO. NUMBER IN CIRCLE CORRESPONDS TO CONDUIT AND CABLE SCHEDULE; SEE SHEET EXXX.

GENERAL NOTES:

1. EXISTING MCC 2983 IS AN EATON CUTLER-HAMMER FREEDOM SERIES 2100 MOTOR CONTROL CENTER.

KEY NOTES:

1. TO MCC 2982, NOT SHOWN.
2. REMOVE EXISTING CENTRATE PUMP #1 AND RELOCATE TO NEW LOCATION AS PER ELECTRICAL PLANS. RETAIN EXISTING CONDUIT. CAP CONDUIT AND LABEL AS SPARE. REMOVE EXISTING WIRE BACK TO SOURCE AT MCC. PROVIDE NEW POWER CONDUIT AND WIRE BETWEEN MCC 2983 AND NEW DISCONNECT SWITCH. PROVIDE NEW POWER CONDUIT AND WIRE BETWEEN NEW DISCONNECT SWITCH NEW EQUIPMENT: CENTRATE PUMP 1, P7151.
3. REMOVE EXISTING EQUIPMENT. RETAIN EXISITING CONDUIT. CAP CONDUIT AND LABEL AS SPARE. REMOVE WIRE BACK TO SOURCE AT MCC. PROVIDE NEW POWER CONDUIT AND WIRE BETWEEN MCC 2983 AND NEW DISCONNECT SWITCH. PROVIDE NEW POWER CONDUIT AND WIRE BETWEEN NEW DISCONNECT SWITCH AND RELOCATED EQUIPMENT: CENTRATE OVERFLOW PUMP 1, P 7161 (FORMERLY P 7151).
4. REMOVE EXISTING MCC CUBICLE FOR CENTRATE PUMP #1. PROVIDE NEW MCC CUBICLE WITH NEW 30A BREAKER AND NEW NEMA 2 MOTOR STARTER.
5. PROVIDE NEW DOOR FOR NEW SPACE.

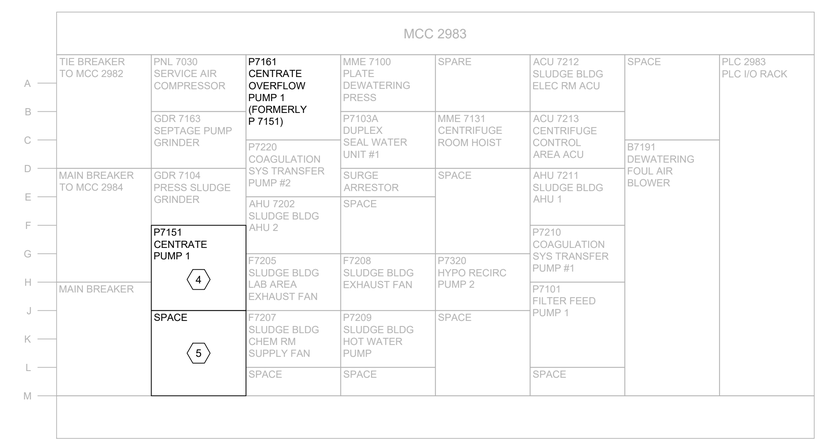

MOTOR CONTROL CENTER MCC 2983

NTS

NO	REVISION DESCRIPTION	BY	APVD	DATE

HDR PROJECT NO.

DESIGNED/DRAWN: E PILAPIL	SCALE: NONE
DESIGN ENGINEER: L KIRMEYER	WORK ORDER: -
PROJECT ENGINEER: -	PROJECT NO: -
	CONTRACT NO:

CENTRAL KITSAP TREATMENT PLANT
SOLIDS AND LIQUID HAULED WASTE UPGRADE

ELECTRICAL
MCC 2983 ONE LINE DIAGRAM AND ELEVATION

DATE: OCTOBER 2023
DRAWING NO: - 500-EX10
SHT NO / TOTAL: -
REV NO: -

C:\Users\epilap\ID\CACDocs\HDR\10367638_CKTP_Solids_and_Liquid_Hauled_Waste_Upgrades_2022\Project Files\HDR_Sheets\500-EX10.dwg 11/17/2023 3:30:20 PM

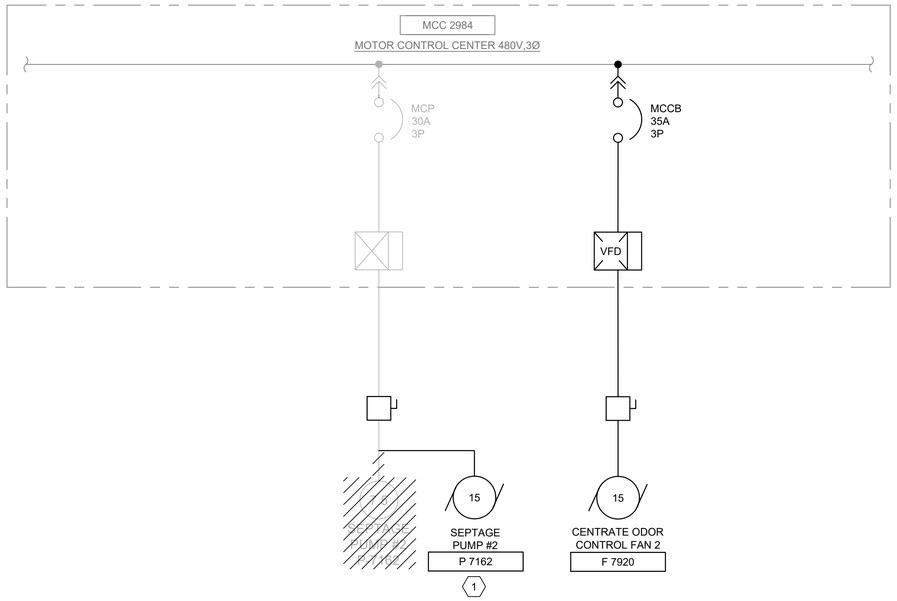

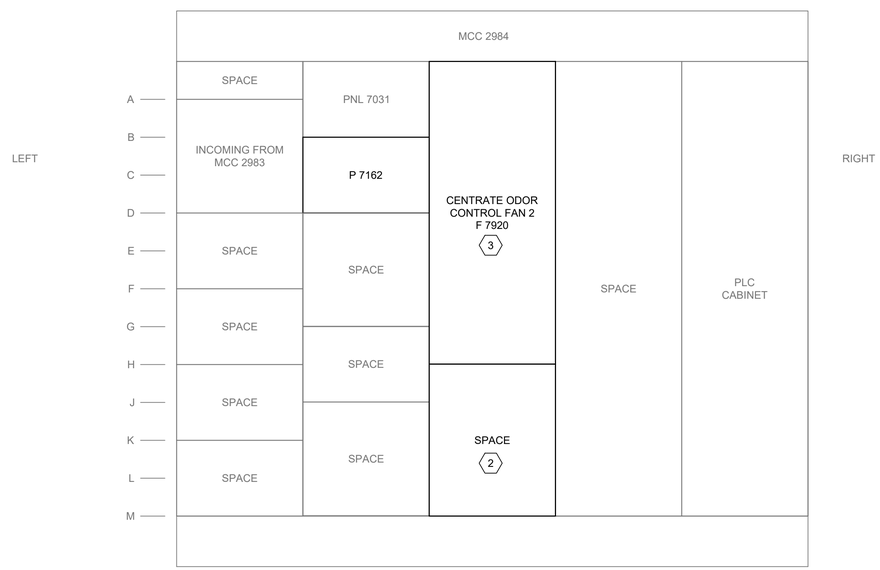

MOTOR CONTROL CENTER MCC 2984

NTS

(NO.) NUMBER IN CIRCLE CORRESPONDS TO CONDUIT AND CABLE SCHEDULE; SEE SHEET EXXX.

GENERAL NOTES:

1. EXISTING MCC 2984 IS AN EATON CUTLER-HAMMER FREEDOM SERIES 2100 MOTOR CONTROL CENTER.

KEY NOTES:

1. REMOVE EXISTING EQUIPMENT. RETAIN EXISITING CONDUIT. CAP CONDUIT AND LABEL AS SPARE. REMOVE WIRE BACK TO SOURCE AT MCC. PROVIDE NEW POWER CONDUIT AND WIRE BETWEEN MCC 2984 AND NEW DISCONNECT SWITCH. PROVIDE NEW POWER CONDUIT AND WIRE BETWEEN NEW DISCONNECT SWITCH AND RELOCATED EQUIPMENT: CENTRATE OVERFLOW PUMP 2, P 7162 (FORMERLY P 7152).
2. PROVIDE NEW DOOR FOR NEW SPACE IN EXISTING SPACE.
3. PROVIDE NEW VFD IN NEW MCC CUBICLE IN EXISTING SPACE.

NO	REVISION DESCRIPTION	BY	APVD	DATE

HDR PROJECT NO.

DESIGNED/DRAWN: E PILAPIL
DESIGN ENGINEER: L KIRMEYER
PROJECT ENGINEER: -
SCALE: NONE
WORK ORDER: -
PROJECT NO: -
CONTRACT NO:

CENTRAL KITSAP TREATMENT PLANT
SOLIDS AND LIQUID HAULED WASTE UPGRADE

ELECTRICAL MCC 2984 PARTIAL ONE LINE DIAGRAM AND ELEVATION

DATE: OCTOBER 2023
DRAWING NO: - 500-EX11
SHT NO / TOTAL: -
REV NO: -

C:\Users\epilap\IDC\ACCDocs\HDR\10367638_CKTP_Solids_and_Liquid_Hauled_Waste_Upgrades_2022\Project Files\HDR_Sheets\500-EX11.dwg 11/17/2023 3:31:53 PM

Appendix H. Preliminary Civil Site Plan

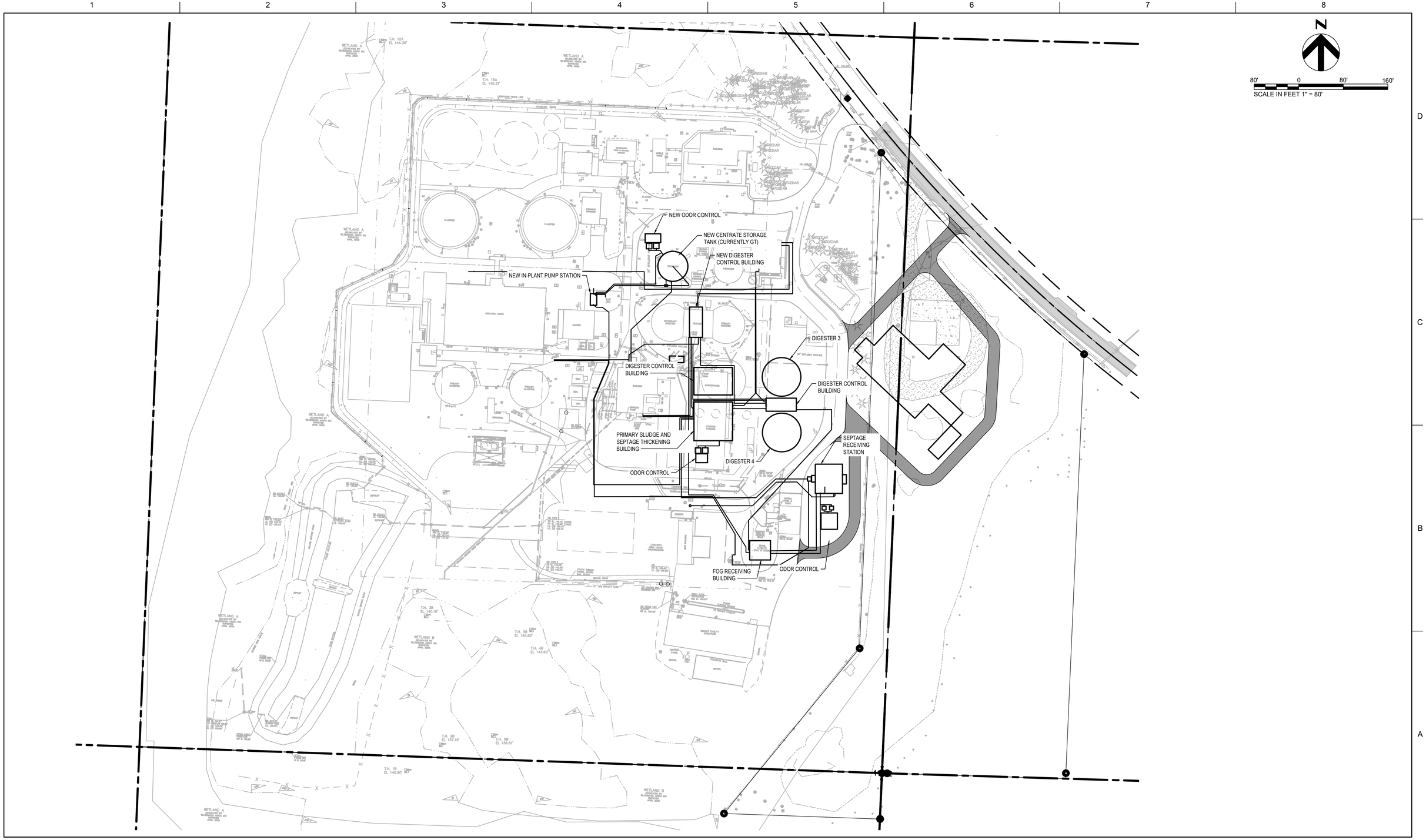

C:\PW\WORKING\WEST01\D3442071\10367638-00G-001.DWG
SCHMIDT, ADAM 11/17/2023 1:21 AM
ANSI_D_(34.00_X_22.00_INCHES) 1:1

ISSUE	DATE	DESCRIPTION

PROJECT NUMBER	10367638

KITSAP COUNTY CKTP
SOLIDS/LIQUIDS HAULED WASTE UPGRADES
12351 BROWNSVILLE HWY NE, POULSBO WA 98370
KITSAP COUNTY CENTRAL KITSAP WASTEWATER TREATMENT PLANT (CKTP)

SITE ORIENTATION PLAN

0 1" 2"

FILENAME	10367638-00G-001.DWG
SCALE	1" = 80'

SHEET
G-004

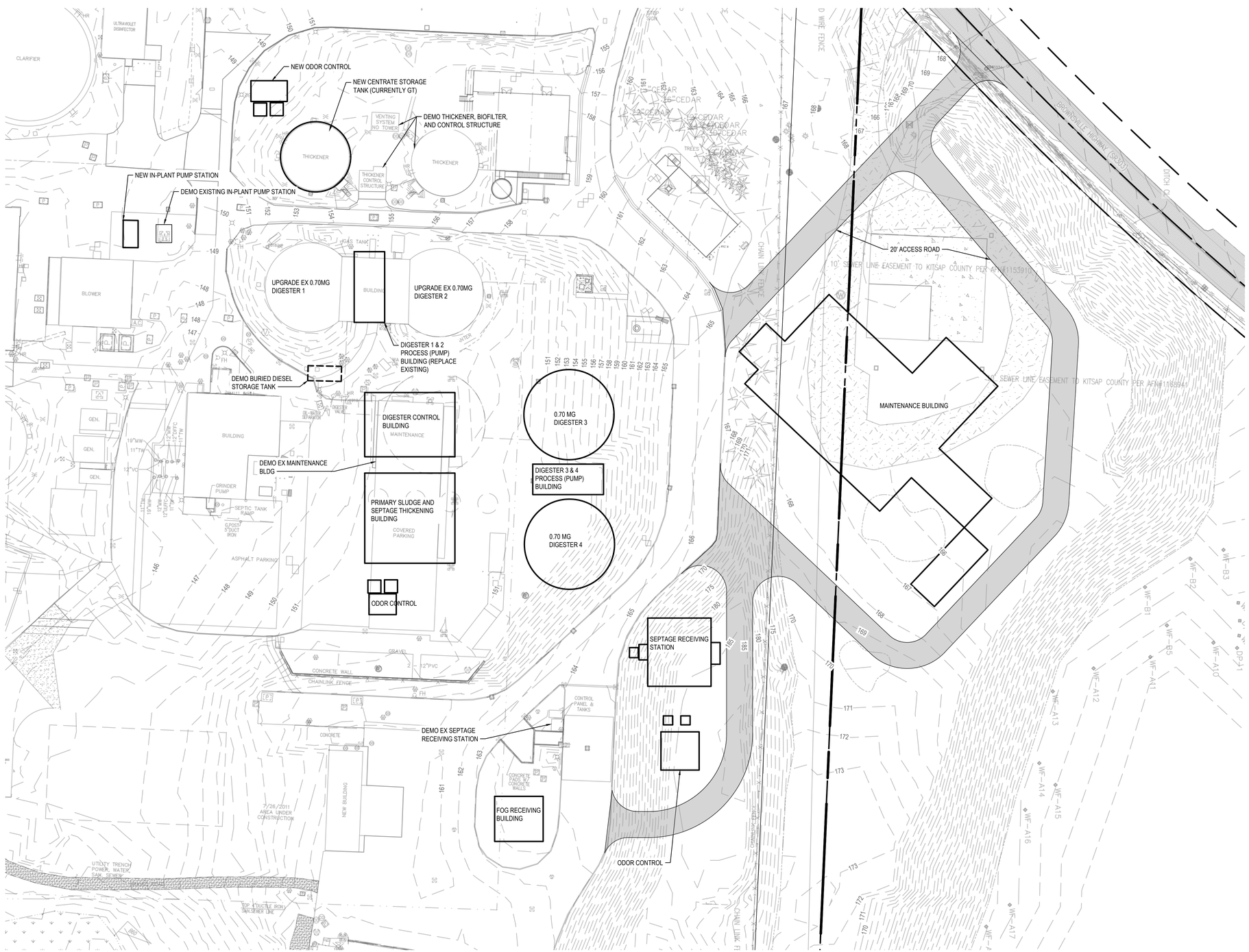

N

40' 0 40' 80'
SCALE IN FEET 1" = 40'

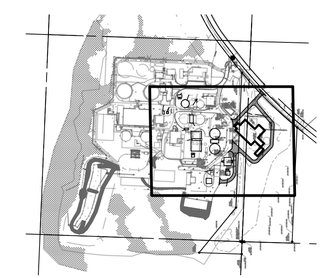

KEY MAP
SCALE IN FEET 1" = 500'

C:\PWWORKING\WEST01\D3442071\10367638-00C-010.DWG
SCHMIDT, ADAM 11/17/2023 1:21 AM
ANSI_D_(34.00_X_22.00_INCHES) 1:1

HDR

ISSUE	DATE	DESCRIPTION

PROJECT NUMBER	10367638

KITSAP COUNTY CKTP
SOLIDS/LIQUIDS HAULED WASTE UPGRADES
12351 BROWNSVILLE HWY NE, POULSBO WA 98370
KITSAP COUNTY CENTRAL KITSAP WASTEWATER TREATMENT PLANT (CKTP)

OVERALL SITE PLAN

0 1" 2"

FILENAME	10367638-00C-010.DWG
SCALE	1" = 40'

SHEET
C-010

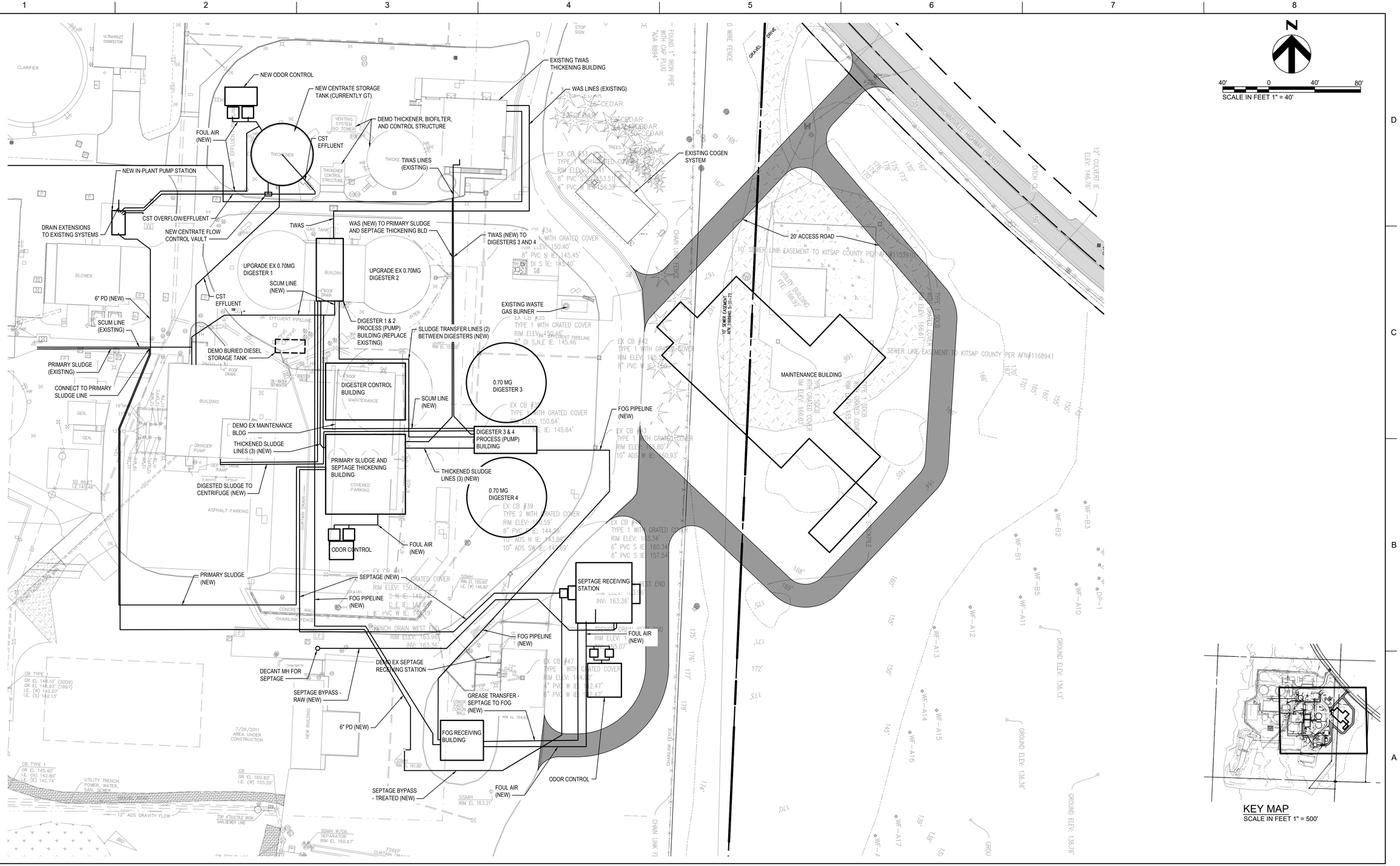

C:\PWWORKING\WEST01\D3442071\10367638-00C-020.DWG
SCHMIDT, ADAM 11/17/2023 1:21 AM
ANSI FULL BLEED D (34.00 X 22.00 INCHES) 1:1

ISSUE	DATE	DESCRIPTION

PROJECT NUMBER	10367638

KITSAP COUNTY CKTP
SOLIDS/LIQUIDS HAULED WASTE UPGRADES
12351 BROWNSVILLE HWY NE, POULSBO WA 98370
KITSAP COUNTY CENTRAL KITSAP WASTEWATER TREATMENT PLANT (CKTP)

OVERALL SITE YARD PIPING PLAN

0 1" 2"

FILENAME	10367638-00C-020.DWG
SCALE	1" = 40'

SHEET
C-020

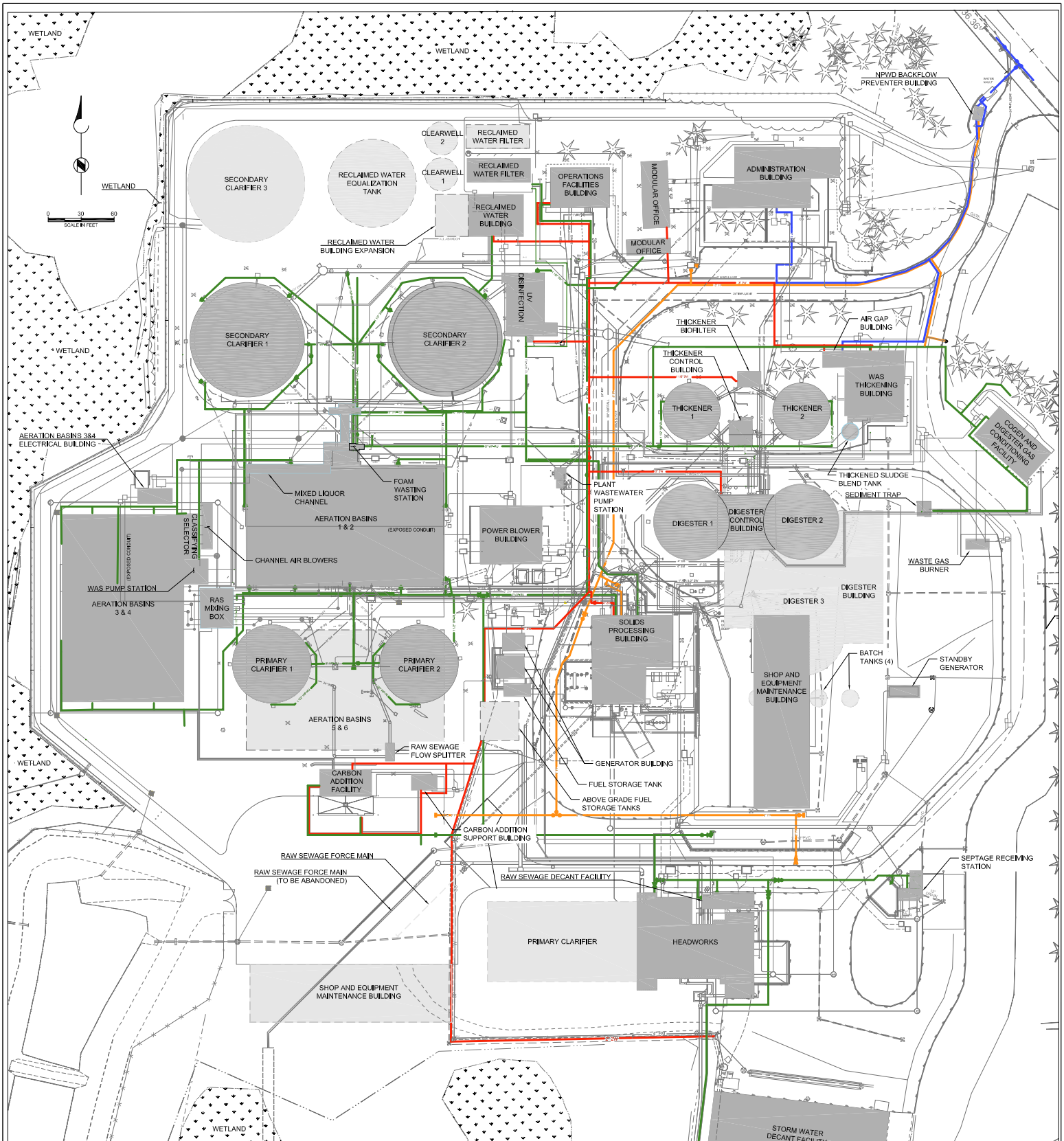

LEGEND:

- EXISTING FACILITIES
- FUTURE FACILITIES
- 1W (POTABLE WATER / CITY WATER)
- 2W (NONPOTABLE CITY WATER)
- 3W / 3WHP (FILTERED OR UNFILTERED SECONDARY EFFLUENT)
- FIRE PROTECTION

BROWN AND CALDWELL
CONSULTANTS
SEATTLE, WASHINGTON

SUBMITTED: _____ DATE: _____
PROJECT MANAGER
APPROVED: _____ DATE: _____
BROWN AND CALDWELL
APPROVED: _____ DATE: _____

LINE IS 2 INCHES AT FULL SIZE
IF NOT 2 INCHES ADDORDINGLY
FILE 140912
DRAWN
DESIGNED
CHECKED
CHECKED

ZONE	REV.	DESCRIPTION	BY	DATE	APP.
		REVISIONS			

KITSAP COUNTY

CENTRAL KITSAP TREATMENT PLANT
RESOURCE RECOVERY PROJECT

REFERENCE
SCHEMATIC SITE PLAN
1W, 2W, 3W/3WHP, AND FP

SEPTEMBER 2015
DRAWING NUMBER
SHEET NUMBER

Appendix I. Rheology Field Testing SOP and Results

Rheology Testing Standard Operating Procedure

CKTP Solids and Liquid Hauled Waste Upgrades

Solids Rheology and Pumping Field Testing

Poulsbo, WA

August 31, 2023

Contents

1 Introduction 1
2 Health and Safety 1
2.1 Safety Documentation 1
2.2 Safety Procedures 1
2.3 Personal Protective Equipment 2
3 Equipment and Supplies 2
4 Set Up 2
4.1 Data Collection 2
4.2 Rheometer 2
5 Sampling 3
6 Testing 3
6.1 Spindle Selection 3
6.2 Running Samples 4
6.2.1 Preparing Data 4
6.2.2 Sample Runs 4
6.2.3 Data Export 4
6.2.4 Repeat Sample Runs 4

1 Introduction

This Standard Operating Procedure (SOP) provides guidance for sludge sample collection at the Central Kitsap Treatment Plant (CKTP) located in Poulsbo, WA. Field testing will be conducted to verify the rhological characteristics of three sludge streams for this project to confirm hydraulic calculations and to inform hydraulic analysis. This SOP addresses procedures for the field sampling and onsite testing.

The following sections outline the general method for testing sludge samples, which will be typical for the following sample streams:

- Waste-Activated Sludge (WAS) from the Thickened Sludge Blending Tank (TSBT)
- Thickened primary/septage solids from the gravity thickeners
- Digested sludge

Staff onsite will assist HDR staff in collecting each of the samples.

2 Health and Safety

2.1 Safety Documentation

Job Hazard Analyses (JHAs) must be developed prior to arriving onsite. JHAs identify potential hazards that may be present onsite or while executing the work. JHAs are used to provide methods to minimize hazards

The site-specific Health and Safety Plan (H&SP) is used to identify actions and precautions to prevent injury. The H&SP also includes essential emergency service contacts in case of incident.

Each individual is required to have read and understood the H&SP for the specific project activity and signed the acknolwedement sheet confirming their review.

2.2 Safety Procedures

A safety briefing must be conducted between onsite personnel and the sampling team before the start of the work each day. The locations for planned field activities should be evaluated for hazards, characterized by the following factors:

- Location of work
- Weather conditions: rainfall, temperature, and wind direction
- Ongoing activities that may influence or disrupt sampling and/or testing efforts
- Accessibility to the samplic locations (e.g., road maintenance, rough terrain, fallen trees, flooding, etc.)

A location for disposal of samples and purge water should be set prior to beginning sampling.

2.3 Personal Protective Equipment

Required Personal Protective Equipment (PPE) is evaluated in the JHA. All PPE should be inspected prior to use and must be replaced if damaged or tampered.

3 Equipment and Supplies

A complete list of equipment and supplies for the sampling team at the CKTP site includes the following:

- Brookfield DVNext Rheometer, including stand and spindle protecter
- Spindle kit
- Laptop, charger, and connection cable
- 500-mL beakers
- Wrench
- Plug-in temperature probe
- Handheld thermometer
- PPE

CKTP will provide a workspace to run rheology testing, sampling bottles, as well as deionized (DI) water for rinsing equipment.

4 Set Up

4.1 Data Collection

A template for inputting data is set up for onsite data collection and analysis. This document was made to organize sample naming and numbering, set up calculations and graphing, and analyze data in the field. Sampling team members should familiarize themselves with the “Rheology Testing.xlsx” file. It is recommended that an additional laptop is used to compile and analyze data using this document during the field testing.

4.2 Rheometer

The following list is a simplified version of “Section II. Getting Started” in the *Operating Instructions* document corresponding to the DVNext Rheometer.

1. Set up rheometer stand on a flat surface and plug in connection cable to computer. Turn on computer and pull up rheology software. Plug in thermometer if applicable. Insert USB if external storage is desired.
2. Power up the rheometer. The AutoZero screen should come up automatically.
3. Level the rheometer. Using the knobs located on the base of the apparatus, adjust heights on each side by turning until instrument is level. A level instrument is

represented by a green digital bubble in the displayed target. Press “Ok”. Leveling will also be checked before sample testing.

5 Sampling

Collecting samples will be done by the sampling team with assistance from CKTP personnel. Date and time should be recorded and added to the sample label. Once HDR sampling team receives samples, temperature should also be recorded.

6 Testing

The rheometer must be set up before testing. Follow steps in section 4.2 before moving forward.

6.1 Spindle Selection

Each spindle has a different resistance to the fluid. Spindles with smaller values are used with more viscous samples and spindles with larger vanes are used with less viscous samples. Once a spindle is mounted, the spindle type is manually entered into the rheometer so that the measurements are based on the specific spindle. Initial tests need to be conducted to identify a spindle that is appropriate for the sample over a range of torque values, which need to be between 10% and 90% of the instrument range. Trials with several spindle sizes may be required to identify the size suitable for the test sample.

4. Verify that the rheometer is properly leveled.
5. Enter the spindle type into the rheometer.
6. Screw in the “best-guess” spindle to the coupling nut. Note: Left-hand thread.
7. Attach the spindle guard.
8. Stir sample, then immerse the spindle gently into the beaker by adjusting the knob on the rheometer stand. Verify that the spindle is in the center of the beaker and deep enough to reach the knotch.
9. Select “Speed” and enter in a “best-guess” in attempt to reach a maximum torque range within the 10%-90% torque threshold.
10. Press “Run”
11. When torque value has stabilized, press “Stop Test”.
12. Repeat Steps 9-11 until torque range is established.
13. Use best judgement to determine whether spindle is suitable to collect nine (9) data points between 10% and 90% torque.
    a. If spindle is determined to be appropriate for the sample, move on to step 14.
    b. If it is not satisfactory, clean equipment and repeat steps 5-13 with a different spindle.

14. Connect the rheometer to the computer and plug in the temperature probe.
15. Verify displays on status bar to ensure proper connections are established. The “Computer Icon” and “Temperature Probe Icon” should both be present. The “USB Icon” should also be present if this external storage is used.

6.2 Running Samples

The computer software will display and collect sample point data from the rheometer throughout the sampling periods.

6.2.1 Preparing Data

Once the proper spindle has been selected for the sample, testing can begin.

16. Select the desired folder and file names for the sample.
17. Select the spindle using the drop down on the computer program.
18. Choose nine (9) rotational speeds varying from 0.2-200 RPM and within the 10%-90% torque criteria for the spindle. The wider the range, the better.
19. Verify the two-minute sample time.

6.2.2 Sample Runs

20. Use the adjustable knob on the stand to lift the spindle. Remove the sample, mix, and put sample and spindle back into place. Verify that the spindle is in the center of the beaker and deep enough to reach the knotch.
21. Run the sample by initiating through the computer software.
22. Each data collection period will take approximately twenty (20) minutes to complete. Verify that all data points have been collected before disturbing sample.

6.2.3 Data Export

23. Create a dated and sample-specific folder on the computer desktop.
24. Export the following files and save with specific stream and sample number:
    a. Result Template (VDTX)
    b. Data Report (PDF)
    c. Data Report (XLSX)
    d. Data Graph (bmp)

6.2.4 Repeat Sample Runs

25. Once a sample run is complete and all files are saved, repeat Sample Runs and Data Export. If possible, verify results are consistent with each other by entering data into the “Rheology Testing.xlsx” file.

26. Once three (3) runs have been completed for the sample, the testing is complete. If further samples are to be tested, go back to Spindle Selection and move forward with the new sample.

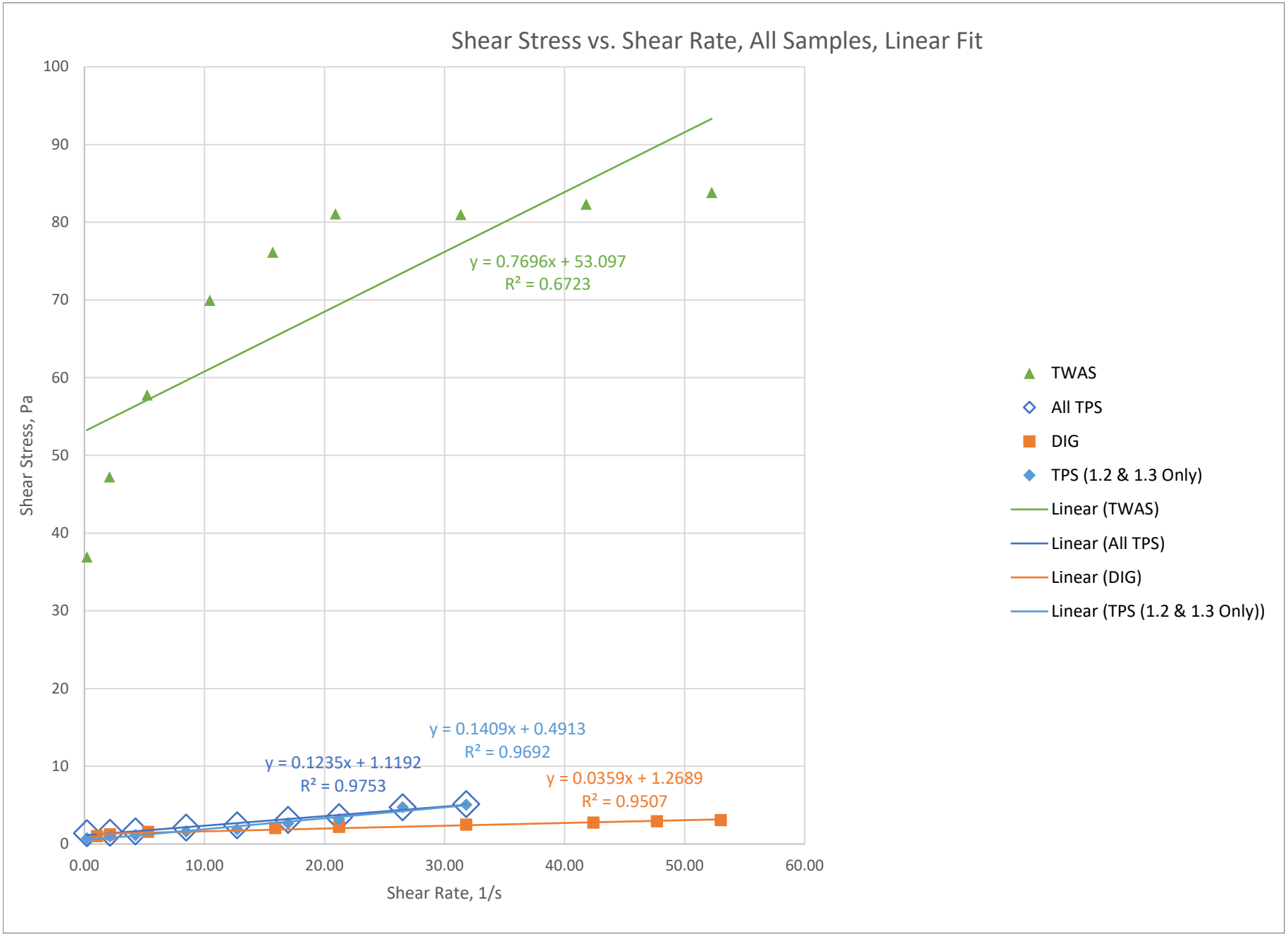
Shear Stress vs. Shear Rate, All Samples, Linear Fit
Shear Stress, Pa
Shear Rate, 1/s
100
90
80
70
60
50
40
30
20
10
0
0.00
10.00
20.00
30.00
40.00
50.00
60.00
y = 0.7696x + 53.097
R² = 0.6723
y = 0.1409x + 0.4913
R² = 0.9692
y = 0.1235x + 1.1192
R² = 0.9753
y = 0.0359x + 1.2689
R² = 0.9507
TWAS
All TPS
DIG
TPS (1.2 & 1.3 Only)
Linear (TWAS)
Linear (All TPS)
Linear (DIG)
Linear (TPS (1.2 & 1.3 Only))

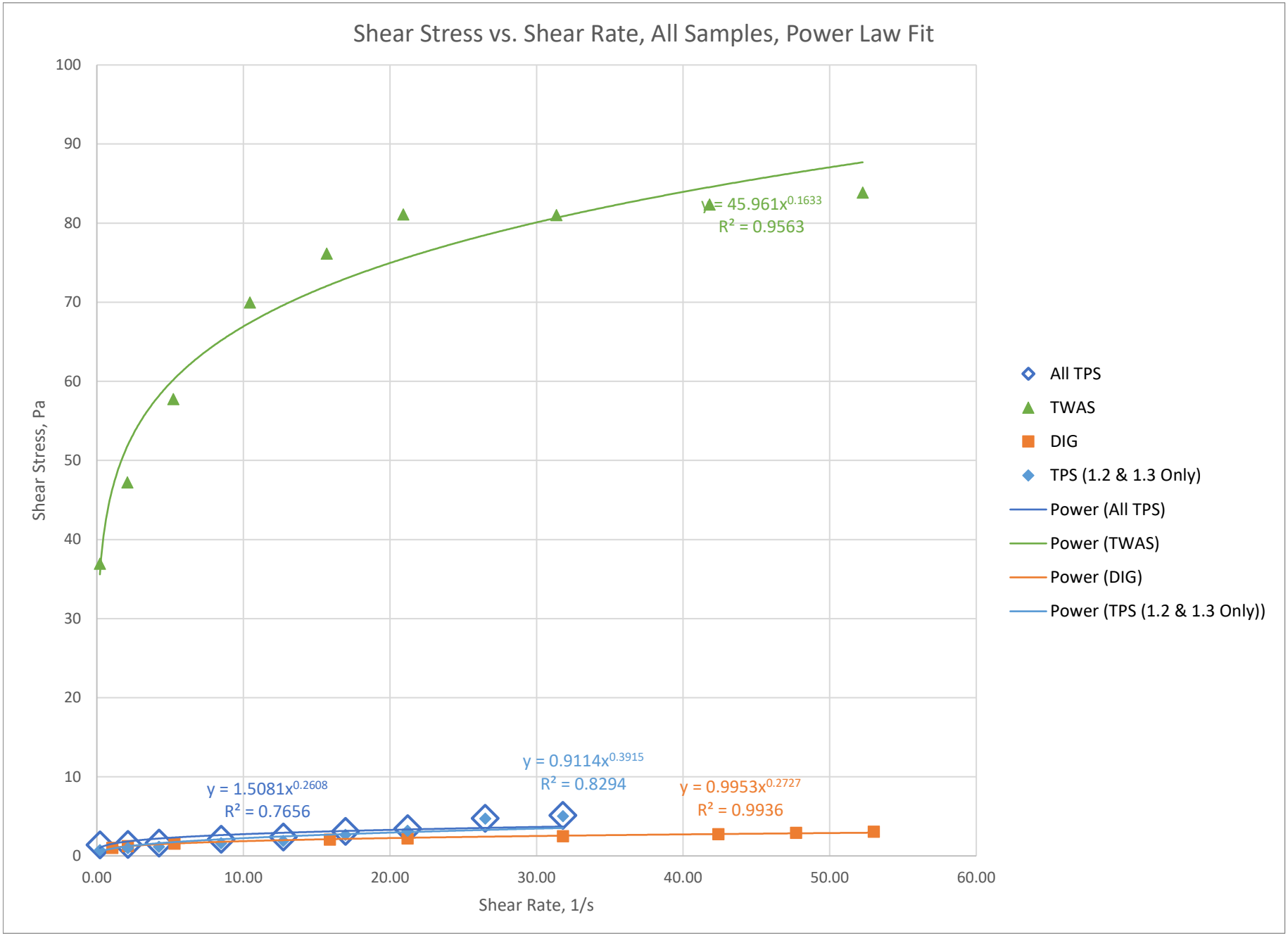
Shear Stress vs. Shear Rate, All Samples, Power Law Fit
Shear Stress, Pa
Shear Rate, 1/s
100
90
80
70
60
50
40
30
20
10
0
0.00
10.00
20.00
30.00
40.00
50.00
60.00
y = 45.961x^0.1633
R² = 0.9563
y = 0.9114x^0.3915
R² = 0.8294
y = 1.5081x^0.2608
R² = 0.7656
y = 0.9953x^0.2727
R² = 0.9936
All TPS
TWAS
DIG
TPS (1.2 & 1.3 Only)
Power (All TPS)
Power (TWAS)
Power (DIG)
Power (TPS (1.2 & 1.3 Only))

Rheology Data: Thickened Primary Sludge (TPS)

	Value	Notes
Sample:	DIG	-
Spindle:	LV-2CU	-
Sample Date:	8/31/2022	-
Test Date:	8/31/2022	-
Notes:	Mixed between replicates	-
Spindle Factor:	30,000	Over N, where N=rpm

Test Table:

Replicate Number	Step No.	Point	Sample Collection Time	Test Time	Time from Start of Test, hh:mm:ss	Viscosity, Cp	Speed, rpm	Torque, percent	Shear Stress, N/m²	Shear Rate, 1/s	Temp, °C	Shear Stress Standard Deviation, N/m²	Shear Stress Coefficient of Variability, percent	Check of Viscosity Using Spindle Factor
1	1	1		2:05 PM	00:02:00.2	990.0	5	16.5	1.1	1.1	33.5			99,000
1	2	2		2:07 PM	00:04:00.2	585.0	10	19.5	1.2	2.1	33.1			58,500
1	3	3		2:09 PM	00:06:00.2	290.4	25	24.2	1.5	5.3	32.8			29,040
1	4	4		2:11 PM	00:08:00.3	126.0	75	31.5	2.0	15.9	32.6			12,600
1	5	5	1:50 PM	2:13 PM	00:10:00.3	100.8	100	33.6	2.1	21.2	32.4			10,080
1	6	6		2:15 PM	00:12:00.4	75.2	150	37.6	2.4	31.8	32.1			7,520
1	7	7		2:17 PM	00:14:00.4	62.6	200	41.7	2.7	42.4	31.9			6,255
1	8	8		2:19 PM	00:16:00.4	58.7	225	44.0	2.8	47.7	31.7			5,867
1	9	9		2:21 PM	00:18:00.4	55.3	250	46.1	2.9	53.0	31.5			5,532
2	1	1		2:23 PM	00:02:00.1	966.0	5	16.1	1.0	1.1	31.1			96,600
2	2	2		2:25 PM	00:04:00.2	585.0	10	19.5	1.2	2.1	30.9			58,500
2	3	3		2:27 PM	00:06:00.2	294.0	25	24.5	1.6	5.3	30.6			29,400
2	4	4		2:29 PM	00:08:00.2	132.8	75	33.2	2.1	15.9	30.4			13,280
2	5	5	1:50 PM	2:31 PM	00:10:00.2	105.9	100	35.3	2.3	21.2	30.2			10,590
2	6	6		2:33 PM	00:12:00.2	80.2	150	40.1	2.6	31.8	30.0			8,020
2	7	7		2:35 PM	00:14:00.2	66.2	200	44.1	2.8	42.4	29.9			6,615
2	8	8		2:37 PM	00:16:00.3	61.6	225	46.2	2.9	47.7	29.7			6,160
2	9	9		2:39 PM	00:18:00.3	58.9	250	49.1	3.1	53.0	29.5			5,892
3	1	1		2:42 PM	00:02:00.1	948.0	5	15.8	1.0	1.1	29.3			94,800
3	2	2		2:44 PM	00:04:00.1	579.0	10	19.3	1.2	2.1	29.1			57,900
3	3	3		2:46 PM	00:06:00.1	294.0	25	24.5	1.6	5.3	28.9			29,400
3	4	4		2:48 PM	00:08:00.1	132.8	75	33.2	2.1	15.9	28.7			13,280
3	5	5	1:50 PM	2:50 PM	00:10:00.1	106.8	100	35.6	2.3	21.2	28.6			10,680
3	6	6		2:52 PM	00:12:00.2	80.8	150	40.4	2.6	31.8	28.5			8,080
3	7	7		2:54 PM	00:14:00.2	66.5	200	44.3	2.8	42.4	28.4			6,645
3	8	8		2:56 PM	00:16:00.2	63.1	225	47.3	3.0	47.7	28.3			6,307
3	9	9		2:58 PM	00:18:00.3	59.3	250	49.4	3.1	53.0	28.1			5,928

Graph Tables (Averages):

Viscosity, Cp	Shear Stress, N/m²	Shear Rate, 1/s	Std Dev Shear Stress, N/m²	Shear Stress Coefficient of Variability, percent
968	1.023	1.06	0.021	2.0%
583	1.237	2.12	0.005	0.4%
293	1.553	5.30	0.009	0.6%
131	2.073	15.90	0.052	2.5%
105	2.217	21.20	0.054	2.5%
79	2.503	31.80	0.081	3.2%
65	2.757	42.40	0.076	2.8%
61	2.917	47.70	0.087	3.0%
58	3.063	53.00	0.095	3.1%

Graphs:

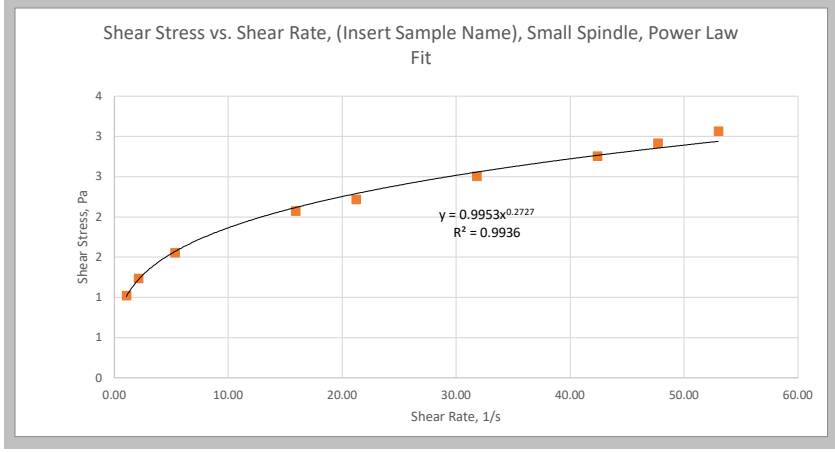

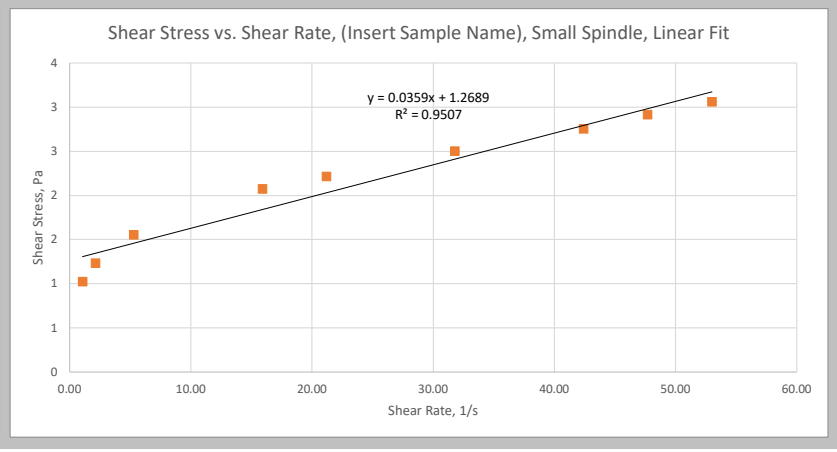

Rheology Data: Thickened Primary Sludge (TPS)

	Value	Notes
Sample:	TPS	-
Spindle:	LV-2CU	-
Sample Date:	8/31/2022	-
Test Date:	8/31/2022	-
Notes:	Mixed between replicates	-
Spindle Factor:	30,000	Over N, where N=rpm

Test Table:

Replicate Number	Step No.	Point	Sample Collection Time	Test Time	Time from Start of Test, hh:mm:ss	Viscosity, Cp	Speed, rpm	Torque, percent	Shear Stress, N/m²	Shear Rate, 1/s	Temp, °C	Shear Stress Standard Deviation, N/m²	Shear Stress Coefficient of Variability, percent	Check of Viscosity Using Spindle Factor
1	1	1		12:44 PM	00:02:00.1	13,140.0	1	43.8	2.8	0.2	22.3			1,314,000
1	2	2		12:46 PM	00:04:00.1	1,128.0	10	37.6	2.4	2.1	22.1			112,800
1	3	3		12:48 PM	00:06:00.1	603.0	20	40.2	2.6	4.2	22.1			60,300
1	4	4		12:50 PM	00:08:00.1	368.3	40	49.1	3.1	8.5	22.1			36,825
1	5	5	11:47 AM	12:52 PM	00:10:00.1	270.5	60	54.1	3.4	12.7	22.1			27,050
1	6	6		12:54 PM	00:12:00.2	235.5	80	62.8	4.0	17.0	22.0			23,550
1	7	7		12:56 PM	00:14:00.3	187.8	100	62.6	4.0	21.2	22.0			18,780
1	8	8		12:58 PM	00:16:00.3	180.5	125	75.2	4.8	26.5	22.0			18,048
1	9	9		1:00 PM	00:18:00.3	167.2	150	83.6	5.3	31.8	22.0			16,720
2	1	1		1:04 PM	00:02:00.1	2,700.0	1	9.0	0.6	0.2	22.4			270,000
2	2	2		1:06 PM	00:04:00.2	462.0	10	15.4	1.0	2.1	22.3			46,200
2	3	3		1:08 PM	00:06:00.3	270.0	20	18.0	1.1	4.2	22.2			27,000
2	4	4		1:10 PM	00:08:00.4	181.5	40	24.2	1.5	8.5	22.1			18,150
2	5	5	11:47 AM	1:12 PM	00:10:00.4	146.5	60	29.3	1.9	12.7	22.1			14,650
2	6	6		1:14 PM	00:12:00.4	153.8	80	41.0	2.6	17.0	22.1			15,375
2	7	7		1:16 PM	00:14:00.4	160.8	100	53.6	3.4	21.2	22.0			16,080
2	8	8		1:18 PM	00:16:00.4	168.2	125	70.1	4.5	26.5	22.0			16,824
2	9	9		1:20 PM	00:18:00.4	174.6	150	87.3	5.6	31.8	22.0			17,460
3	1	1		1:25 PM	00:02:00.1	4,080.0	1	13.6	0.9	0.2	22.0			408,000
3	2	2		1:27 PM	00:04:00.1	459.0	10	15.3	1.0	2.1	22.0			45,900
3	3	3		1:29 PM	00:06:00.1	271.5	20	18.1	1.2	4.2	22.0			27,150
3	4	4		1:31 PM	00:08:00.1	199.5	40	26.6	1.7	8.5	22.0			19,950
3	5	5	11:47 AM	1:33 PM	00:10:00.1	149.0	60	29.8	1.9	12.7	22.0			14,900
3	6	6		1:35 PM	00:12:00.1	159.8	80	42.6	2.7	17.0	22.0			15,975
3	7	7		1:37 PM	00:14:00.1	139.8	100	46.6	3.0	21.2	22.0			13,980
3	8	8		1:39 PM	00:16:00.1	187.9	125	78.3	5.0	26.5	21.9			18,792
3	9	9		1:41 PM	00:18:00.1	142.2	150	71.1	4.5	31.8	21.9			14,220

Graph Tables (Averages):

Viscosity, Cp	Shear Stress, N/m²	Shear Rate, 1/s	Std Dev Shear Stress, N/m²	Shear Stress Coefficient of Variability, percent
6,640	1.407	0.21	0.985	70.0%
683	1.447	2.12	0.667	46.1%
382	1.617	4.24	0.667	41.3%
250	2.117	8.48	0.712	33.6%
189	2.400	12.72	0.736	30.6%
183	3.103	16.96	0.628	20.2%
163	3.450	21.20	0.417	12.1%
179	4.740	26.50	0.214	4.5%
161	5.130	31.80	0.441	8.6%

Graphs:

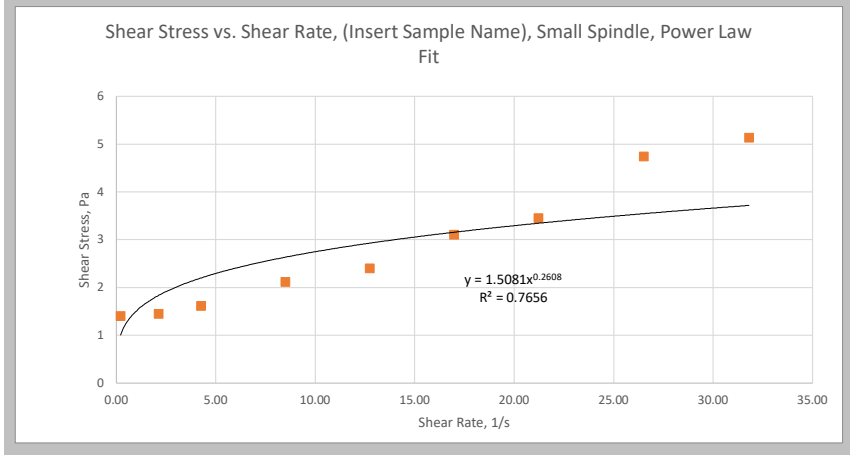

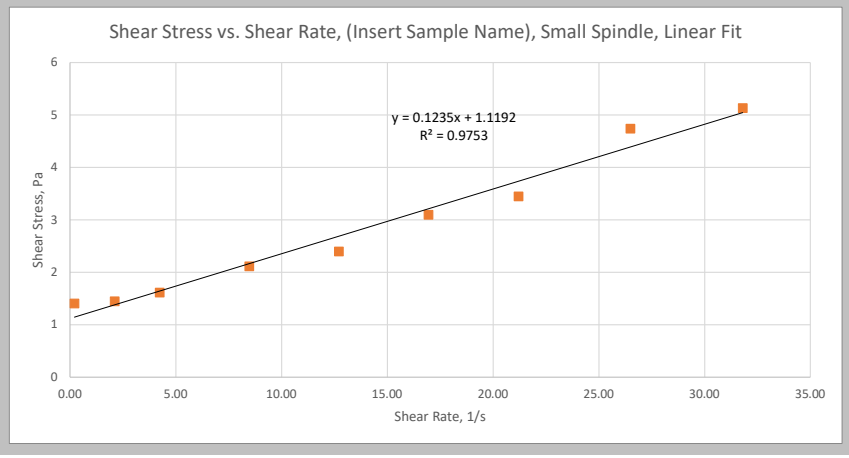

Rheology Data: Thickened Waste Activated Sludge (TWAS)

	Value	Notes
Sample:	TWAS	-
Spindle:	LV-5CU	-
Sample Date:	8/31/2023	-
Test Date:	8/31/2023	-
Notes:	Mixed between replicates.	-
Spindle Factor:	1,200,000	Over N, where N=rpm

Test Table:

Replicate Number	Step No.	Point	Sample Collection Time	Test Time	Time from Start of Test, hh:mm:ss	Viscosity, Cp	Speed, rpm	Torque, percent	Shear Stress, N/m²	Shear Rate, 1/s	Temp, °C	Shear Stress Standard Deviation, N/m²	Shear Stress Coefficient of Variability, percent	Check of Viscosity Using Spindle Factor
1	1	1		10:08 AM	00:02:00.1	181,200.0	1	15.1	37.9	0.2	22.7			18,120,000
1	2	2		10:10 AM	00:04:00.1	23,040.0	10	19.2	48.2	2.1	22.6			2,304,000
1	3	3		10:12 AM	00:06:00.1	11,040.0	25	23.0	57.7	5.2	22.5			1,104,000
1	4	4		10:14 AM	00:08:00.1	6,624.0	50	27.6	69.2	10.5	22.4			662,400
1	5	5	9:32 AM	10:16 AM	00:10:00.1	4,832.0	75	30.2	75.7	15.7	22.3			483,200
1	6	6		10:18 AM	00:12:00.1	3,852.0	100	32.1	80.5	20.9	22.3			385,200
1	7	7		10:20 AM	00:14:00.1	2,776.0	150	34.7	87.0	31.4	22.3			277,600
1	8	8		10:22 AM	00:16:00.2	1,956.0	200	32.6	81.8	41.8	22.2			195,600
1	9	9		10:24 AM	00:18:00.2	1,574.0	250	32.8	82.3	52.3	22.2			157,440
2	1	1		10:29 AM	00:02:00.1	165,600.0	1	13.8	34.6	0.2	22.3			16,560,000
2	2	2		10:31 AM	00:04:00.1	21,360.0	10	17.8	44.6	2.1	22.2			2,136,000
2	3	3		10:33 AM	00:06:00.1	10,560.0	25	22.0	55.2	5.2	22.1			1,056,000
2	4	4		10:35 AM	00:08:00.2	6,432.0	50	26.8	67.2	10.5	22.1			643,200
2	5	5	9:32 AM	10:37 AM	00:10:00.2	4,768.0	75	29.8	74.7	15.7	22.0			476,800
2	6	6		10:39 AM	00:12:00.2	3,864.0	100	32.2	80.8	20.9	22.0			386,400
2	7	7		10:41 AM	00:14:00.2	2,536.0	150	31.7	79.5	31.4	21.9			253,600
2	8	8		10:43 AM	00:16:00.2	1,968.0	200	32.8	82.3	41.8	21.9			196,800
2	9	9		10:45 AM	00:18:00.2	1,613.0	250	33.6	84.3	52.3	21.9			161,280
3	1	1		11:01 AM	00:02:00.1	183,600.0	1	15.3	38.4	0.2	22.1			18,360,000
3	2	2		11:03 AM	00:04:00.1	23,400.0	10	19.5	48.9	2.1	22.0			2,340,000
3	3	3		11:05 AM	00:06:00.1	11,570.0	25	24.1	60.4	5.2	21.9			1,156,800
3	4	4		11:07 AM	00:08:00.2	7,032.0	50	29.3	73.5	10.5	21.9			703,200
3	5	5	9:32 AM	11:09 AM	00:10:00.2	4,976.0	75	31.1	78.0	15.7	21.8			497,600
3	6	6		11:11 AM	00:12:00.2	3,924.0	100	32.7	82.0	20.9	21.8			392,400
3	7	7		11:13 AM	00:14:00.2	2,440.0	150	30.5	76.5	31.4	21.7			244,000
3	8	8		11:15 AM	00:16:00.2	1,986.0	200	33.1	83.0	41.8	21.7			198,600
3	9	9		11:17 AM	00:18:00.2	1,627.0	250	33.9	85.0	52.3	21.7			162,720

Graph Tables (Averages):

Viscosity, Cp	Shear Stress, N/m²	Shear Rate, 1/s	Std Dev Shear Stress, N/m²	Shear Stress Coefficient of Variability, percent
176,800	36.950	0.21	1.667	4.5%
22,600	47.233	2.09	1.860	3.9%
11,057	57.767	5.23	2.148	3.7%
6,696	69.970	10.45	2.614	3.7%
4,859	76.160	15.68	1.364	1.8%
3,880	81.093	20.90	0.656	0.8%
2,584	81.007	31.35	4.433	5.5%
1,970	82.343	41.80	0.514	0.6%
1,605	83.850	52.25	1.165	1.4%

Graphs:

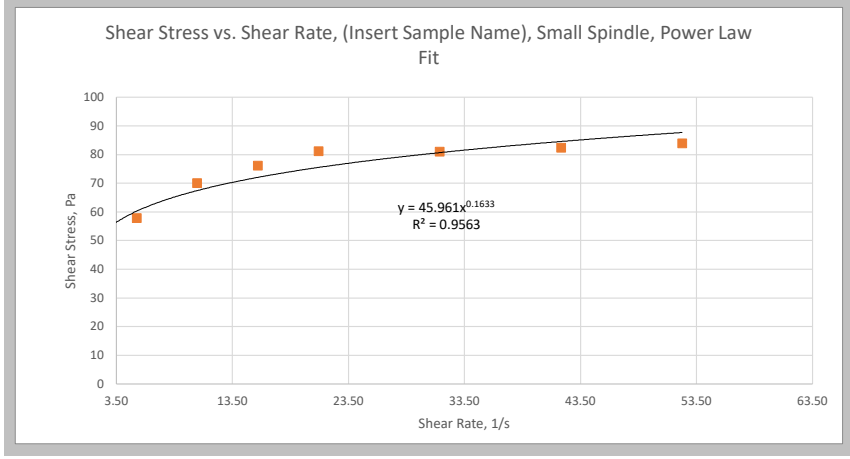

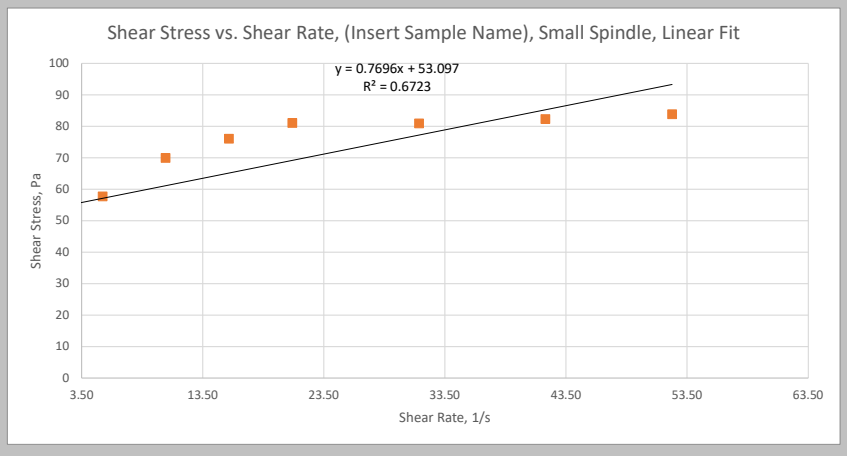

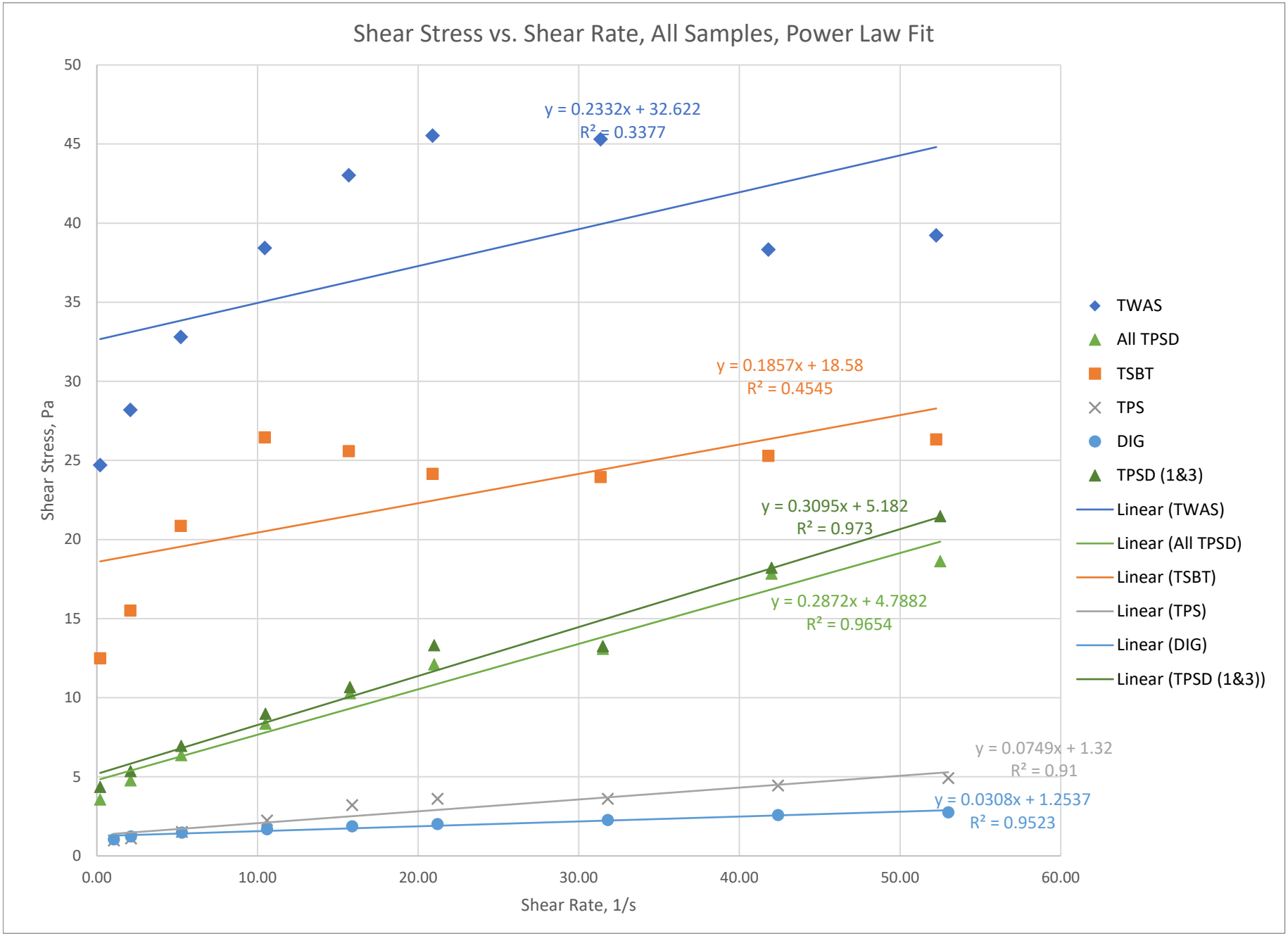
Shear Stress vs. Shear Rate, All Samples, Power Law Fit
Shear Stress, Pa
Shear Rate, 1/s
0
5
10
15
20
25
30
35
40
45
50
0.00
10.00
20.00
30.00
40.00
50.00
60.00
y = 0.2332x + 32.622
R² = 0.3377
y = 0.1857x + 18.58
R² = 0.4545
y = 0.3095x + 5.182
R² = 0.973
y = 0.2872x + 4.7882
R² = 0.9654
y = 0.0749x + 1.32
R² = 0.91
y = 0.0308x + 1.2537
R² = 0.9523
TWAS
All TPSD
TSBT
TPS
DIG
TPSD (1&3)
Linear (TWAS)
Linear (All TPSD)
Linear (TSBT)
Linear (TPS)
Linear (DIG)
Linear (TPSD (1&3))

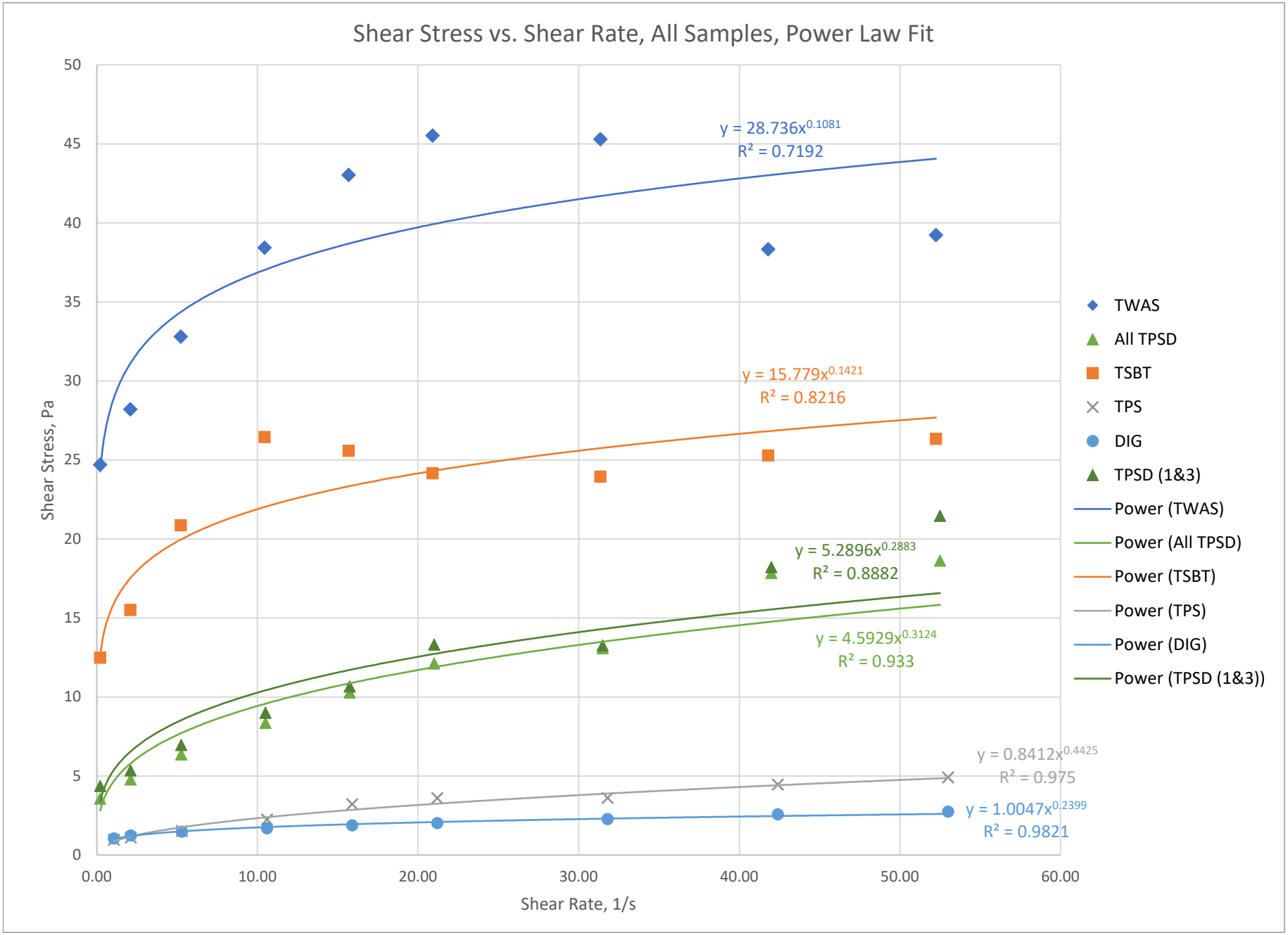
Shear Stress vs. Shear Rate, All Samples, Power Law Fit
Shear Stress, Pa
Shear Rate, 1/s
0
5
10
15
20
25
30
35
40
45
50
0.00
10.00
20.00
30.00
40.00
50.00
60.00
y = 28.736x^0.1081
R² = 0.7192
y = 15.779x^0.1421
R² = 0.8216
y = 5.2896x^0.2883
R² = 0.8882
y = 4.5929x^0.3124
R² = 0.933
y = 0.8412x^0.4425
R² = 0.975
y = 1.0047x^0.2399
R² = 0.9821
TWAS
All TPSD
TSBT
TPS
DIG
TPSD (1&3)
Power (TWAS)
Power (All TPSD)
Power (TSBT)
Power (TPS)
Power (DIG)
Power (TPSD (1&3))

Rheology Data: Thickened Waste Activated Sludge (TWAS)

	Value	Notes
Sample:	TWAS	-
Spindle:	LV-4U	-
Sample Date:	9/7/2023	-
Test Date:	9/7/2023	-
Notes:	Mixed between replicates.	-
Spindle Factor:	600,000	Over N, where N=rpm

Test Table:

Replicate Number	Step No.	Point	Sample Collection Time	Test Time	Time from Start of Test, hh:mm:ss	Viscosity, Cp	Speed, rpm	Torque, percent	Shear Stress, N/m²	Shear Rate, 1/s	Temp, °C	Shear Stress Standard Deviation, N/m²	Shear Stress Coefficient of Variability, percent	Check of Viscosity Using Spindle Factor
1	1	1		10:01 AM	00:02:00.1	135,600	1	22.6	28.3	0.2	20.5			13,560,000
1	2	2		10:03 AM	00:04:00.1	15,780	10	26.3	33.0	2.1	20.5			1,578,000
1	3	3		10:05 AM	00:06:00.1	7,512	25	31.3	39.3	5.2	20.5			751,200
1	4	4		10:07 AM	00:08:00.1	4,488	50	37.4	46.9	10.5	20.5			448,800
1	5	5	9:15 AM	10:09 AM	00:10:00.2	3,360	75	42.0	52.7	15.7	20.4			336,000
1	6	6		10:11 AM	00:12:00.2	2,760	100	46.0	57.7	20.9	20.4			276,000
1	7	7		10:13 AM	00:14:00.2	2,004	150	50.1	62.8	31.4	20.4			200,400
1	8	8		10:15 AM	00:16:00.3	1,206	200	40.2	50.4	41.8	20.4			120,600
1	9	9		10:17 AM	00:18:00.3	1,006	250	41.9	52.5	52.3	20.4			100,560
2	1	1		10:21 AM	00:02:00.1	166,800	1	27.8	34.9	0.2	20.3			16,680,000
2	2	2		10:23 AM	00:04:00.1	17,760	10	29.6	37.1	2.1	20.3			1,776,000
2	3	3		10:25 AM	00:06:00.1	8,184	25	34.1	42.8	5.2	20.3			818,400
2	4	4		10:27 AM	00:08:00.2	4,896	50	40.8	51.2	10.5	20.3			489,600
2	5	5	9:15 AM	10:29 AM	00:10:00.2	3,616	75	45.2	56.7	15.7	20.3			361,600
2	6	6		10:31 AM	00:12:00.2	2,850	100	47.5	59.6	20.9	20.3			285,000
2	7	7		10:33 AM	00:14:00.3	1,940	150	48.5	60.8	31.4	20.3			194,000
2	8	8		10:35 AM	00:16:00.4	1,146	200	38.2	47.9	41.8	20.3			114,600
2	9	9		10:37 AM	00:18:00.4	948	250	39.5	49.5	52.3	20.3			94,800
3	1	1		10:42 AM	00:02:00.1	142,200	1	23.7	29.7	0.2	20.3			14,220,000
3	2	2		10:44 AM	00:04:00.1	17,220	10	28.7	36.0	2.1	20.3			1,722,000
3	3	3		10:46 AM	00:06:00.1	7,920	25	33.0	41.4	5.2	20.3			792,000
3	4	4		10:48 AM	00:08:00.2	4,452	50	37.1	46.5	10.5	20.3			445,200
3	5	5	9:15 AM	10:50 AM	00:10:00.2	3,352	75	41.9	52.5	15.7	20.3			335,200
3	6	6		10:52 AM	00:12:00.3	2,586	100	43.1	54.1	20.9	20.3			258,600
3	7	7		10:54 AM	00:14:00.3	1,492	150	37.3	46.8	31.4	20.3			149,200
3	8	8		10:56 AM	00:16:00.3	1,098	200	36.6	45.9	41.8	20.3			109,800
3	9	9		10:58 AM	00:18:00.3	871	250	36.3	45.5	52.3	20.3			87,120

Graph Tables (Averages):

Viscosity, Cp	Shear Stress, N/m²	Shear Rate, 1/s	Std Dev Shear Stress, N/m²	Shear Stress Coefficient of Variability, percent
148,200	24.700	0.21	2.805	11.4%
16,920	28.200	2.09	1.747	6.2%
7,872	32.800	5.23	1.444	4.4%
4,612	38.433	10.45	2.103	5.5%
3,443	43.033	15.68	1.922	4.5%
2,732	45.533	20.90	2.291	5.0%
1,812	45.300	31.35	7.144	15.8%
1,150	38.333	41.80	1.845	4.8%
942	39.233	52.25	2.876	7.3%

Graphs:

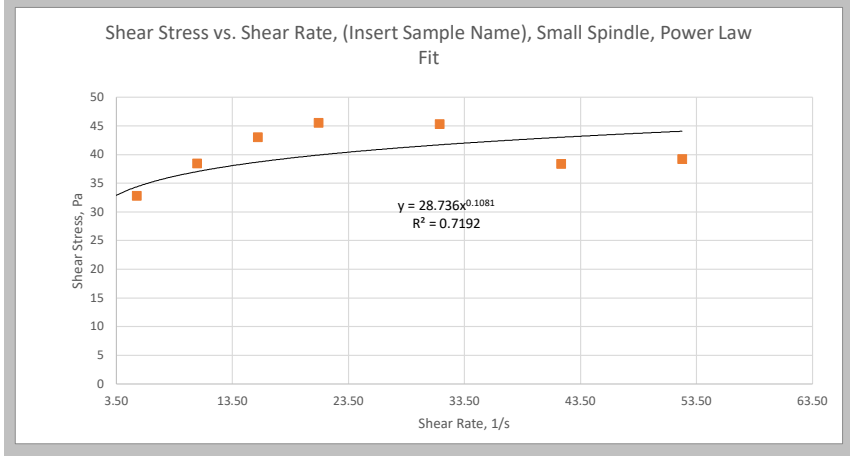

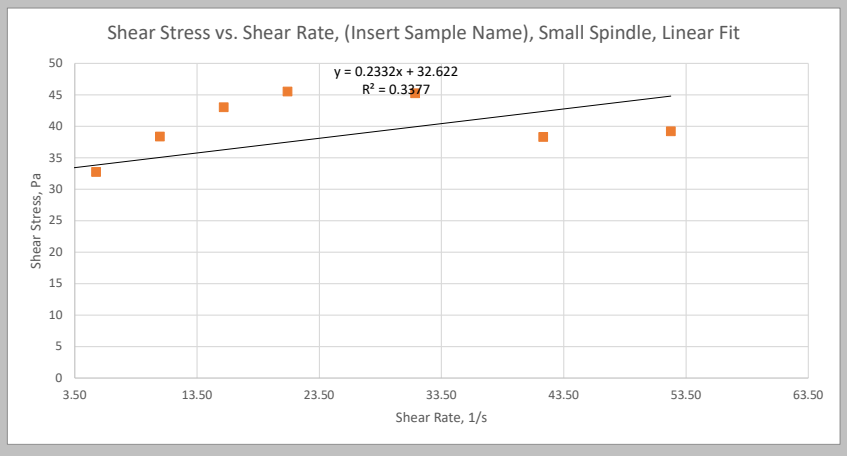

Rheology Data: Thickened Primary Sludge (TPS)

	Value	Notes
Sample:	TPSD	-
Spindle:	LV-3CU	-
Sample Date:	9/7/2023	-
Test Date:	9/7/2023	-
Notes:	Mixed between replicates	-
Spindle Factor:	120,000	Over N, where N=rpm

Test Table:

Replicate Number	Step No.	Point	Sample Collection Time	Test Time	Time from Start of Test, hh:mm:ss	Viscosity, Cp	Speed, rpm	Torque, percent	Shear Stress, N/m²	Shear Rate, 1/s	Temp, °C	Shear Stress Standard Deviation, N/m²	Shear Stress Coefficient of Variability, percent	Check of Viscosity Using Spindle Factor
1	1	1		11:07 AM	00:02:00.1	15,720.0	1	13.1	3.3	0.2	18.8			1,572,000
1	2	2		11:09 AM	00:04:00.1	3,024.0	10	25.2	6.4	2.1	18.8			302,400
1	3	3		11:11 AM	00:06:00.1	1,584.0	25	33.0	8.3	5.3	18.8			158,400
1	4	4		11:13 AM	00:08:00.1	854.4	50	35.6	9.0	10.5	18.8			85,440
1	5	5	11:05 AM	11:15 AM	00:10:00.1	699.2	75	43.7	11.0	15.8	18.8			69,920
1	6	6		11:17 AM	00:12:00.1	668.4	100	55.7	14.0	21.0	18.8			66,840
1	7	7		11:19 AM	00:14:00.1	416.8	150	52.1	13.1	31.5	18.8			41,680
1	8	8		11:21 AM	00:16:00.1	457.8	200	76.3	19.2	42.0	18.9			45,780
1	9	9		11:23 AM	00:18:00.1	381.1	250	79.4	20.0	52.5	18.9			38,112
2	1	1		11:27 AM	00:02:00.1	9,360.0	1	7.8	2.0	0.2	19.0			936,000
2	2	2		11:29 AM	00:04:00.1	1,728.0	10	14.4	3.6	2.1	19.0			172,800
2	3	3		11:31 AM	00:06:00.2	988.8	25	20.6	5.2	5.3	19.0			98,880
2	4	4		11:33 AM	00:08:00.2	674.4	50	28.1	7.1	10.5	19.1			67,440
2	5	5	11:25 AM	11:35 AM	00:10:00.2	603.2	75	37.7	9.5	15.8	19.1			60,320
2	6	6		11:37 AM	00:12:00.2	462.0	100	38.5	9.7	21.0	19.1			46,200
2	7	7		11:39 AM	00:14:00.2	404.8	150	50.6	12.8	31.5	19.1			40,480
2	8	8		11:41 AM	00:16:00.2	407.4	200	67.9	17.1	42.0	19.1			40,740
2	9	9		11:43 AM	00:18:00.2	246.2	250	51.3	12.9	52.5	19.2			24,624
3	1	1		11:47 AM	00:02:00.2	25,920.0	1	21.6	5.4	0.2	19.2			2,592,000
3	2	2		11:49 AM	00:04:00.2	2,076.0	10	17.3	4.4	2.1	19.2			207,600
3	3	3		11:51 AM	00:06:00.2	1,066.0	25	22.2	5.6	5.3	19.2			106,560
3	4	4		11:53 AM	00:08:00.3	859.2	50	35.8	9.0	10.5	19.3			85,920
3	5	5	11:45 AM	11:55 AM	00:10:00.3	656.0	75	41.0	10.3	15.8	19.3			65,600
3	6	6		11:57 AM	00:12:00.4	600.0	100	50.0	12.6	21.0	19.3			60,000
3	7	7		11:59 AM	00:14:00.4	424.8	150	53.1	13.4	31.5	19.3			42,480
3	8	8		12:01 PM	00:16:00.4	409.2	200	68.2	17.2	42.0	19.3			40,920
3	9	9		12:03 PM	00:18:00.5	436.8	250	91.0	22.9	52.5	19.4			43,680

Graph Tables (Averages):

Viscosity, Cp	Shear Stress, N/m²	Shear Rate, 1/s	Std Dev Shear Stress, N/m²	Shear Stress Coefficient of Variability, percent
17,000	3.570	0.21	1.429	40.0%
2,276	4.780	2.10	1.149	24.0%
1,213	6.367	5.25	1.391	21.8%
796	8.357	10.50	0.903	10.8%
653	10.280	15.75	0.617	6.0%
577	12.113	21.00	1.805	14.9%
415	13.087	31.50	0.259	2.0%
425	17.843	42.00	0.981	5.5%
355	18.623	52.50	4.199	22.5%

Graphs:

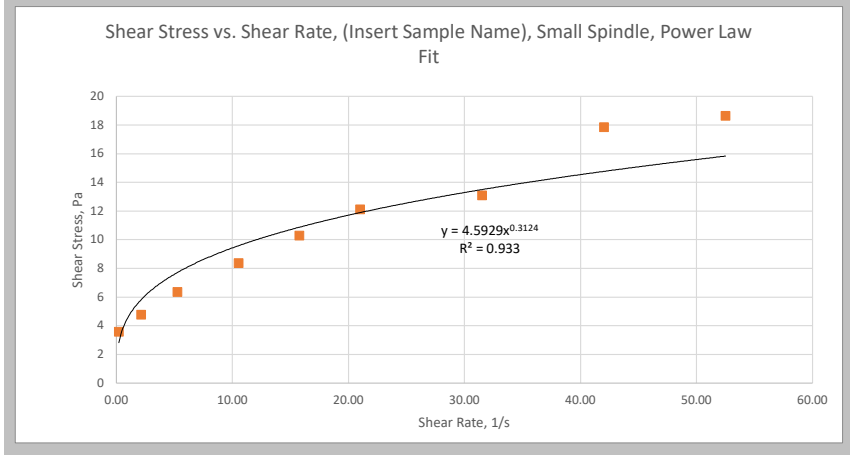

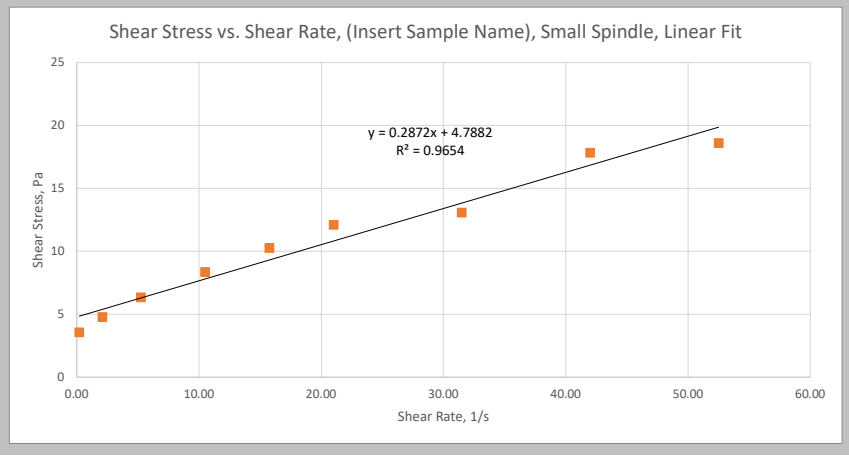

Rheology Data: Thickened Primary and Septage (TPS)

	Value	Notes
Sample:	TPS	-
Spindle:	LV-2CU	-
Sample Date:	9/7/2023	-
Test Date:	9/7/2023	-
Notes:	Mixed between replicates.	-
Spindle Factor:	30,000	Over N, where N=rpm

Test Table:

Replicate Number	Step No.	Point	Sample Collection Time	Test Time	Time from Start of Test, hh:mm:ss	Viscosity, Cp	Speed, rpm	Torque, percent	Shear Stress, N/m²	Shear Rate, 1/s	Temp, °C	Shear Stress Standard Deviation, N/m²	Shear Stress Coefficient of Variability, percent	Check of Viscosity Using Spindle Factor
1	1	1	1:51 PM	1:53 PM	00:02:00.1	648.0	5	10.8	0.7	1.1	21.9			64,800
1	2	2		1:55 PM	00:04:00.1	402.0	10	13.4	0.9	2.1	21.8			40,200
1	3	3		1:57 PM	00:06:00.1	256.8	25	21.4	1.4	5.3	21.8			25,680
1	4	4		1:59 PM	00:08:00.2	176.4	50	29.4	1.9	10.6	21.7			17,640
1	5	5		2:01 PM	00:10:00.2	181.6	75	45.4	2.9	15.9	21.7			18,160
1	6	6		2:03 PM	00:12:00.2	197.4	100	65.8	4.2	21.2	21.7			19,740
1	7	7		2:05 PM	00:14:00.2	92.6	150	46.3	2.9	31.8	21.6			9,260
1	8	8		2:07 PM	00:16:00.2	115.9	200	77.3	4.9	42.4	21.6			11,595
1	9	9		2:09 PM	00:18:00.2	106.1	250	88.4	5.6	53.0	21.6			10,608
2	1	1	2:12 PM	2:14 PM	00:02:00.1	774.0	5	12.9	0.8	1.1	21.6			77,400
2	2	2		2:16 PM	00:04:00.1	465.0	10	15.5	1.0	2.1	21.5			46,500
2	3	3		2:18 PM	00:06:00.1	272.4	25	22.7	1.4	5.3	21.5			27,240
2	4	4		2:20 PM	00:08:00.1	238.2	50	39.7	2.5	10.6	21.5			23,820
2	5	5		2:22 PM	00:10:00.1	199.2	75	49.8	3.2	15.9	21.4			19,920
2	6	6		2:24 PM	00:12:00.1	176.4	100	58.8	3.7	21.2	21.4			17,640
2	7	7		2:26 PM	00:14:00.1	123.4	150	61.7	3.9	31.8	21.4			12,340
2	8	8		2:28 PM	00:16:00.1	100.3	200	66.9	4.3	42.4	21.4			10,035
2	9	9		2:30 PM	00:18:00.1	96.5	250	80.4	5.1	53.0	21.4			9,648
3	1	1	2:31 PM	2:33 PM	00:02:00.2	1,320.0	5	22.0	1.4	1.1	21.4			132,000
3	2	2		2:35 PM	00:04:00.2	690.0	10	23.0	1.5	2.1	21.3			69,000
3	3	3		2:37 PM	00:06:00.2	328.8	25	27.4	1.7	5.3	21.3			32,880
3	4	4		2:39 PM	00:08:00.2	222.0	50	37.0	2.4	10.6	21.3			22,200
3	5	5		2:41 PM	00:10:00.2	225.2	75	56.3	3.6	15.9	21.3			22,520
3	6	6		2:43 PM	00:12:00.2	136.2	100	45.4	2.9	21.2	21.3			13,620
3	7	7		2:45 PM	00:14:00.2	124.8	150	62.4	4.0	31.8	21.2			12,480
3	8	8		2:47 PM	00:16:00.3	98.6	200	65.7	4.2	42.4	21.2			9,855
3	9	9		2:49 PM	00:18:00.3	75.7	250	63.1	4.0	53.0	21.2			7,572

Graph Tables (Averages):

Viscosity, Cp	Shear Stress, N/m²	Shear Rate, 1/s	Std Dev Shear Stress, N/m²	Shear Stress Coefficient of Variability, percent
914	0.970	1.06	0.309	31.8%
519	1.100	2.12	0.261	23.7%
286	1.513	5.30	0.164	10.8%
212	2.247	10.60	0.275	12.3%
202	3.213	15.90	0.283	8.8%
170	3.603	21.20	0.535	14.9%
114	3.610	31.80	0.474	13.1%
105	4.450	42.40	0.334	7.5%
93	4.913	53.00	0.672	13.7%

Graphs:

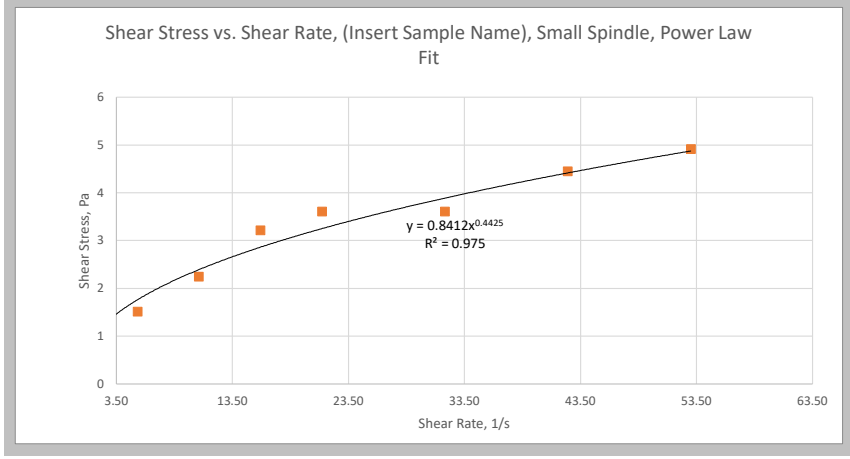

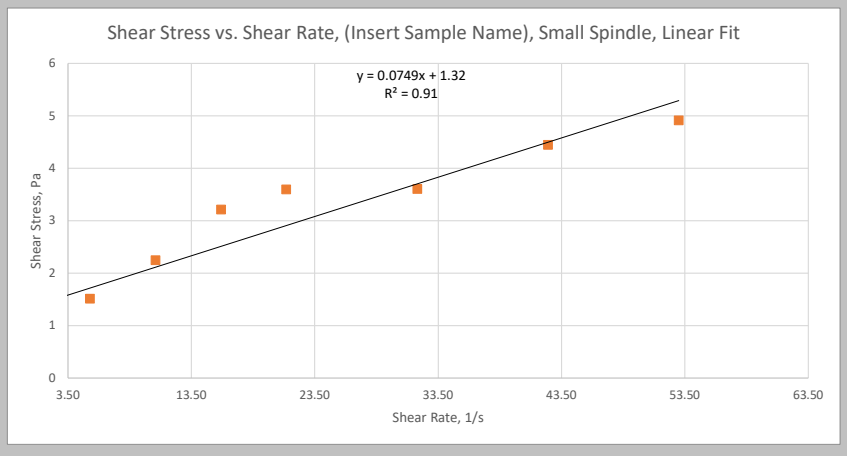

Rheology Data: Digester (DIG)

	Value	Notes
Sample:	DIG	-
Spindle:	LV-2CU	-
Sample Date:	9/7/2023	-
Test Date:	9/7/2023	-
Notes:	Mixed between replicates.	-
Spindle Factor:	30,000	Over N, where N=rpm

Test Table:

Replicate Number	Step No.	Point	Sample Collection Time	Test Time	Time from Start of Test, hh:mm:ss	Viscosity, Cp	Speed, rpm	Torque, percent	Shear Stress, N/m²	Shear Rate, 1/s	Temp, °C	Shear Stress Standard Deviation, N/m²	Shear Stress Coefficient of Variability, percent	Check of Viscosity Using Spindle Factor
1	1	1		2:56 PM	00:02:00.1	1,014.0	5	16.9	1.1	1.1	33.5			101,400
1	2	2		2:58 PM	00:04:00.1	591.0	10	19.7	1.3	2.1	33.3			59,100
1	3	3		3:00 PM	00:06:00.1	279.6	25	23.3	1.5	5.3	33.2			27,960
1	4	4		3:02 PM	00:08:00.1	161.4	50	26.9	1.7	10.6	33.1			16,140
1	5	5	2:29 PM	3:04 PM	00:10:00.1	118.0	75	29.5	1.9	15.9	32.9			11,800
1	6	6		3:06 PM	00:12:00.1	93.3	100	31.1	2.0	21.2	32.8			9,330
1	7	7		3:08 PM	00:14:00.1	70.0	150	35.0	2.2	31.8	32.6			7,000
1	8	8		3:10 PM	00:16:00.1	64.1	200	42.7	2.7	42.4	32.5			6,405
1	9	9		3:12 PM	00:18:00.1	51.2	250	42.7	2.7	53.0	32.4			5,124
2	1	1		3:16 PM	00:02:00.1	966.0	5	16.1	1.0	1.1	31.6			96,600
2	2	2		3:18 PM	00:04:00.1	576.0	10	19.2	1.2	2.1	31.4			57,600
2	3	3		3:20 PM	00:06:00.1	277.2	25	23.1	1.5	5.3	31.3			27,720
2	4	4		3:22 PM	00:08:00.1	158.4	50	26.4	1.7	10.6	31.2			15,840
2	5	5	2:29 PM	3:24 PM	00:10:00.1	117.2	75	29.3	1.9	15.9	31.1			11,720
2	6	6		3:26 PM	00:12:00.1	93.9	100	31.3	2.0	21.2	31.0			9,390
2	7	7		3:28 PM	00:14:00.1	70.8	150	35.4	2.3	31.8	30.9			7,080
2	8	8		3:30 PM	00:16:00.1	59.6	200	39.7	2.5	42.4	30.7			5,955
2	9	9		3:32 PM	00:18:00.1	51.7	250	43.1	2.7	53.0	30.6			5,172
3	1	1		3:35 PM	00:02:00.1	990.0	5	16.5	1.1	1.1	30.0			99,000
3	2	2		3:37 PM	00:04:00.1	582.0	10	19.4	1.2	2.1	29.9			58,200
3	3	3		3:39 PM	00:06:00.1	279.6	25	23.3	1.5	5.3	29.8			27,960
3	4	4		3:41 PM	00:08:00.1	159.6	50	26.6	1.7	10.6	29.7			15,960
3	5	5	2:29 PM	3:43 PM	00:10:00.1	118.4	75	29.6	1.9	15.9	29.6			11,840
3	6	6		3:45 PM	00:12:00.1	97.5	100	32.5	2.1	21.2	29.5			9,750
3	7	7		3:47 PM	00:14:00.1	73.8	150	36.9	2.4	31.8	29.4			7,380
3	8	8		3:49 PM	00:16:00.2	58.8	200	39.2	2.5	42.4	29.3			5,880
3	9	9		3:51 PM	00:18:00.2	52.6	250	43.8	2.8	53.0	29.2			5,256

Graph Tables (Averages):

Viscosity, Cp	Shear Stress, N/m²	Shear Rate, 1/s	Std Dev Shear Stress, N/m²	Shear Stress Coefficient of Variability, percent
990	1.047	1.06	0.021	2.0%
583	1.233	2.12	0.012	1.0%
279	1.477	5.30	0.005	0.3%
160	1.693	10.60	0.012	0.7%
118	1.873	15.90	0.009	0.5%
95	2.013	21.20	0.040	2.0%
72	2.277	31.80	0.052	2.3%
61	2.577	42.40	0.102	4.0%
52	2.750	53.00	0.029	1.1%

Graphs:

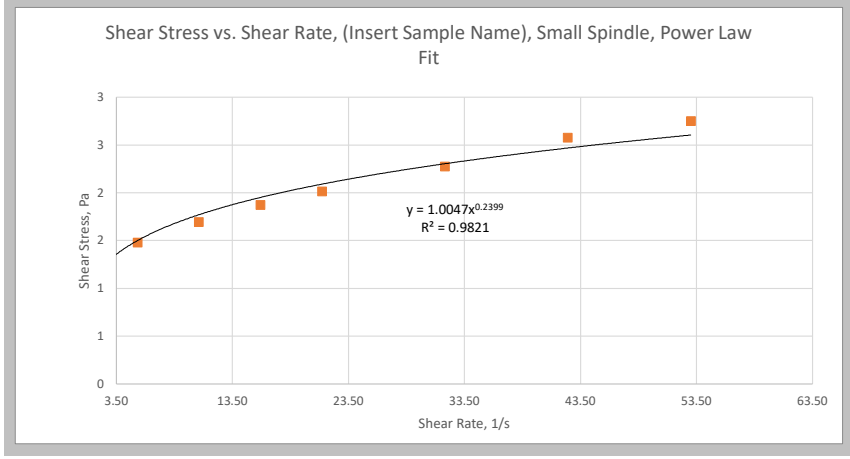

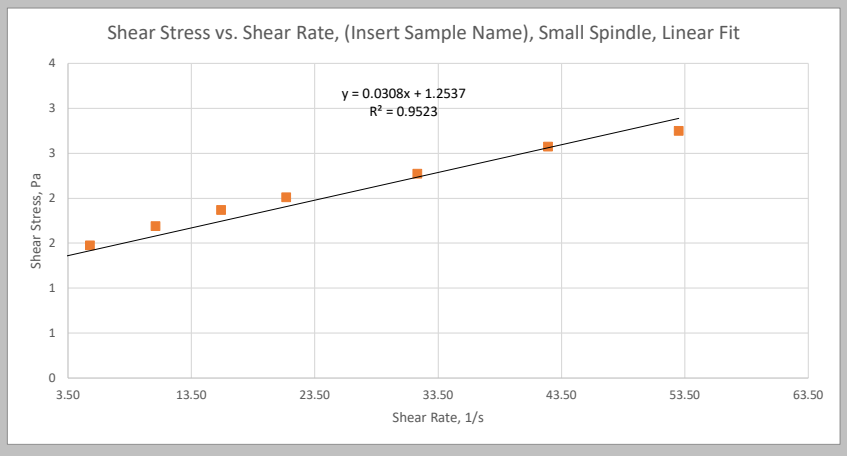

Sample Day (#)	All
Replicate No. (#)	All
Run Name	All
Stream	(Multiple Items)

Row Labels	Average of Viscosity (cP)	Average of Shear Rate (1/s)	Avg. Torque (%)	StdDev Shear Stress (N/m^2)	STDDEV:Torque
(blank)					
1	145,383	0.209	18.1	3.6	19.8%
2	17,703	2.09	21.7	4.3	19.8%
3	8,552	5.225	26.0	4.8	18.3%
4	5,134	10.45	31.2	5.4	17.5%
5	3,731	15.68	34.0	6.6	19.4%
6	2,948	20.9	35.7	7.5	21.0%
7	1,959	31.35	35.5	7.5	21.1%
8	1,401	41.8	33.0	6.7	20.2%
9	1,145	52.25	33.8	6.7	19.8%
8/31/2023					
1	176,800	0.209	14.7	1.7	11.3%
2	22,600	2.09	18.8	1.9	9.9%
3	11,057	5.225	23.0	2.1	9.3%
4	6,696	10.45	27.9	2.6	9.4%
5	4,859	15.68	30.4	1.4	4.5%
6	3,880	20.9	32.3	0.7	2.0%
7	2,584	31.35	32.3	4.4	13.7%
8	1,970	41.8	32.8	0.5	1.6%
9	1,605	52.25	33.4	1.2	3.5%
9/7/2023					
1	104,000	0.209	17.3	9.6	55.4%
2	12,170	2.09	20.3	10.1	49.6%
3	5,932	5.225	24.7	10.3	41.6%
4	3,572	10.45	29.8	11.0	37.1%
5	2,537	15.68	31.7	14.3	45.0%
6	1,944	20.9	32.4	16.6	51.1%
7	1,288	31.35	32.2	17.2	53.4%
8	878	41.8	29.3	11.5	39.3%
9	723	52.25	30.1	11.7	38.8%
Grand Total	**18,892**	**19.99488889**	**27.9**	**20.7**	**74.2%**

Stream	All

Row Labels	Average of Total Volatile Solids (%TVS)	Average of Total Solids (%TS)
8/31/2023	81.4	4.073333333
9/7/2023	83.72	3.986
Grand Total	**82.85**	**4.01875**

Run Name

- TSBT 2.1
- TSBT 2.2
- TSBT 2.3
- TWAS + TSBT SMR AV...
- TWAS + TSBT SMR AV...
- TWAS + TSBT SMR AV...
- TWAS + TSBT SMR AV...
- TWAS + TSBT SMR AV...
- TWAS + TSBT SMR AV...
- TWAS + TSBT SMR AV...

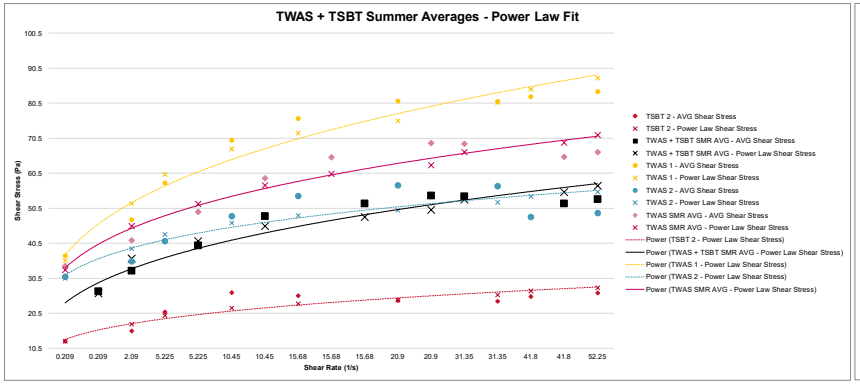

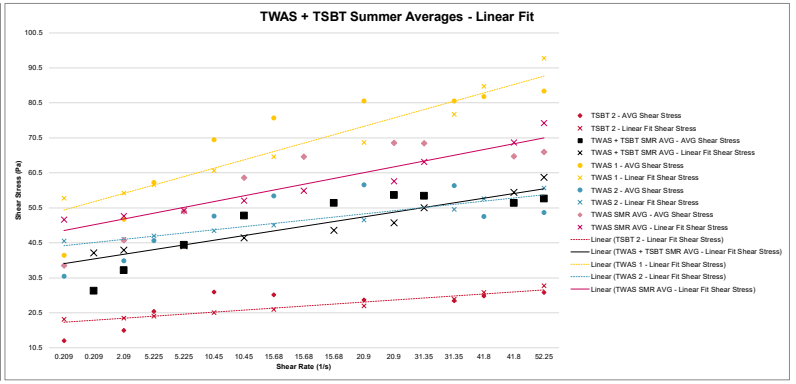

Sample Day (#)	All
Replicate No. (#)	All
Run Name	All
Stream	(Multiple Items)

Stream	All

Row Labels	Average of Total Volatile Solids (%TVS)	Average of Total Solids (%TS)
8/31/2023	81.4	4.073
9/7/2023	83.72	3.986
Grand Total	**82.85**	**4.01875**

Row Labels	Average of Viscosity (cP)	Average of Shear Rate (1/s)	Avg. Torque (%)	StdDev Shear Stress (N/m^2)	STDDEV: Torque
(blank)					
1	6,640	0.212	22.1	0.0	0.0%
2	5	21.63	1.0	0.0	0.0%
3	601	2.12	20.0	0.0	0.0%
4	382	4.24	25.4	0.0	0.0%
5	286	5.3	23.8	0.0	0.0%
6	250	8.48	33.3	0.0	0.0%
7	212	10.6	35.4	0.0	0.0%
8	189	12.72	37.7	0.0	0.0%
9	202	15.9	50.5	0.0	0.0%
10	183	16.96	48.8	0.0	0.0%
11	166	21.2	55.5	0.0	0.0%
12	179	26.5	74.5	0.0	0.0%
13	137	31.8	68.7	0.0	0.0%
14	105	42.4	70.0	0.0	0.0%
15	93	53	77.3	0.0	0.0%
8/31/2023					
1	6,640	0.212	22.1	1.0	4.5%
2	683	2.12	22.8	0.7	2.9%
3	382	4.24	25.4	0.7	2.6%
4	250	8.48	33.3	0.7	2.1%
5	189	12.72	37.7	0.7	1.9%
6	183	16.96	48.8	0.6	1.3%
7	163	21.2	54.3	0.4	0.8%
8	179	26.5	74.5	0.2	0.3%
9	161	31.8	80.7	0.4	0.5%
9/7/2023					
1	8,957	0.635	14.7	1.7	11.3%
2	1,398	2.11	18.1	2.0	11.1%
3	749	5.275	24.6	2.6	10.7%
4	504	10.55	34.3	3.1	9.1%
5	427	15.825	45.7	3.6	7.8%
6	373	21.1	52.4	4.5	8.5%
7	265	31.65	54.4	4.8	8.7%
8	265	42.2	70.4	6.7	9.6%
9	224	52.75	75.6	7.5	9.9%
Grand Total	**1,199**	**18.10761806**	**43.6**	**4.7**	**10.7%**

Run Name

- TPS 1.1
- TPS 1.2
- TPS 1.3
- TPS 2.1
- TPS 2.2
- TPS 2.3
- TPS SMR AVG .1 RPM
- TPS SMR AVG .10 RPM
- TPS SMR AVG .100 RPM

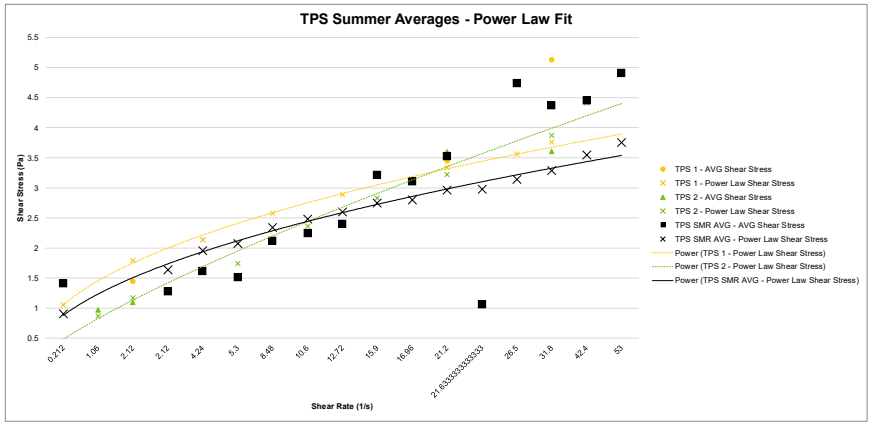

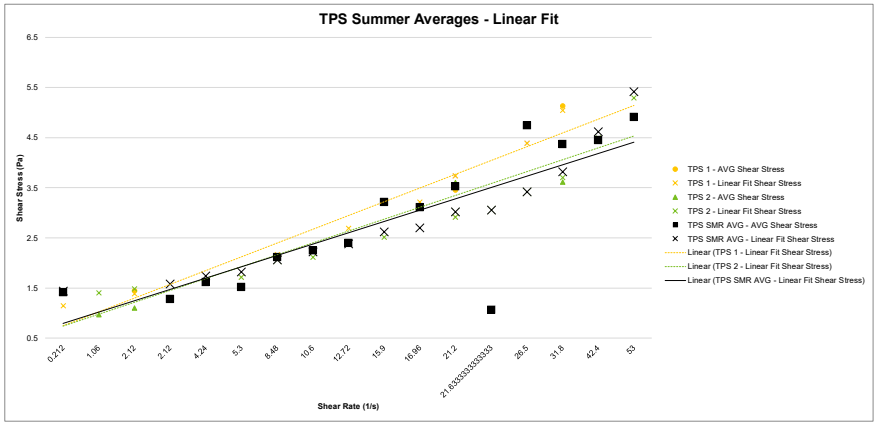

Sample Day (#)	All
Replicate No. (#)	All
Run Name	(Multiple Items)
Stream	(Multiple Items)

Row Labels	Average of Viscosity (cP)	Average of Shear Rate (1/s)	Avg. Torque (%)	StdDev Shear Stress (N/m^2)	STDDEV:Torque
(blank)					
1	979	1.06	16.3	0.0	0.0%
2	583	2.12	19.4	0.0	0.0%
3	279	5.3	23.2	0.0	0.0%
4	160	10.6	26.6	0.0	0.0%
5	124	15.9	31.1	0.0	0.0%
6	100	21.2	33.2	0.0	0.0%
7	75	31.8	37.6	0.0	0.0%
8	63	42.4	42.0	0.0	0.0%
9	61	47.7	45.8	0.0	0.0%
10	55	53	45.7	0.0	0.0%
8/31/2023					
1	968	1.06	16.1	0.0	0.1%
2	583	2.12	19.4	0.0	0.0%
3	293	5.3	24.4	0.0	0.0%
4	131	15.9	32.6	0.1	0.2%
5	105	21.2	34.8	0.1	0.2%
6	79	31.8	39.4	0.1	0.2%
7	65	42.4	43.4	0.1	0.2%
8	61	47.7	45.8	0.1	0.2%
9	58	53	48.2	0.1	0.2%
9/7/2023					
1	990	1.06	16.5	0.0	0.1%
2	583	2.12	19.4	0.0	0.1%
3	279	5.3	23.2	0.0	0.0%
4	160	10.6	26.6	0.0	0.0%
5	118	15.9	29.5	0.0	0.0%
6	95	21.2	31.6	0.0	0.1%
7	72	31.8	35.8	0.1	0.1%
8	61	42.4	40.5	0.1	0.3%
9	52	53	43.2	0.0	0.1%
Grand Total	**261**	**22.5415625**	**31.8**	**0.6**	**2.0%**

Stream	All

Row Labels	Average of Total Volatile Solids (%TVS)	Average of Total Solids (%TS)
8/31/2023	81.4	4.073333333
9/7/2023	83.72	3.986
Grand Total	**82.85**	**4.01875**

Run Name

- DIG 1.1
- DIG 1.2
- DIG 1.3
- DIG 2.1
- DIG 2.2
- DIG 2.3
- DIG SMR AVG .10 RPM
- DIG SMR AVG .100 RP...
- DIG SMR AVG .150 RP...

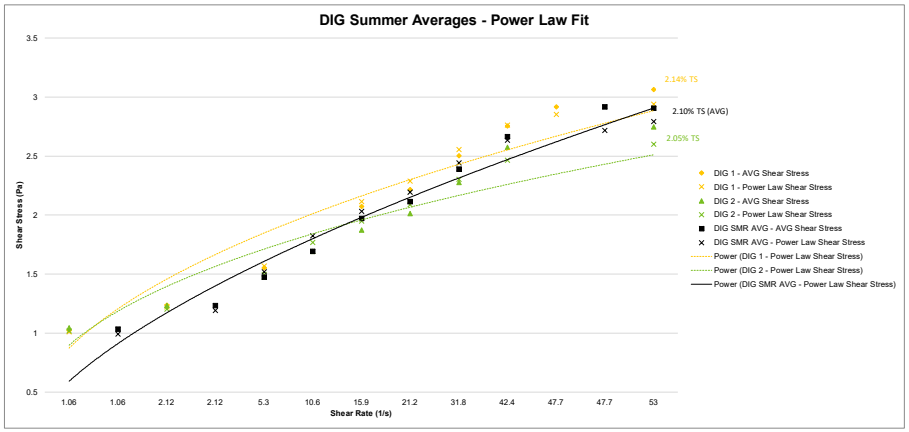

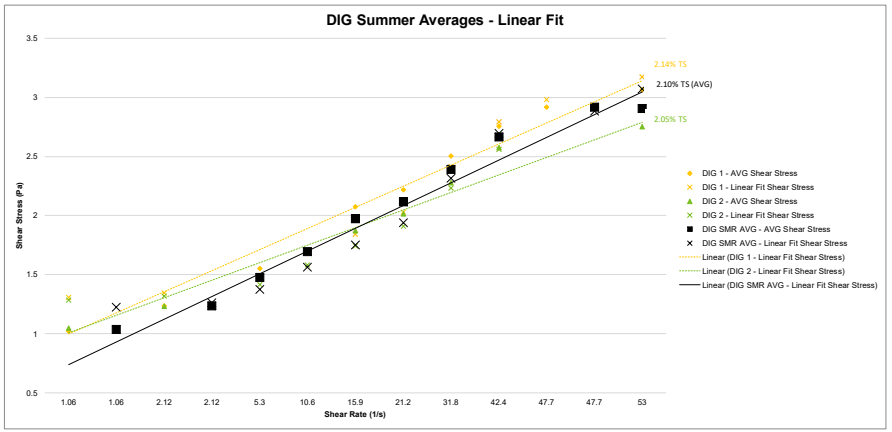

Appendix J. SEPA Checklist

SEPA ENVIRONMENTAL CHECKLIST

Purpose of checklist:

Governmental agencies use this checklist to help determine whether the environmental impacts of your proposal are significant. This information is also helpful to determine if available avoidance, minimization, or compensatory mitigation measures will address the probable significant impacts or if an environmental impact statement will be prepared to further analyze the proposal.

Instructions for applicants:

This environmental checklist asks you to describe some basic information about your proposal. Please answer each question accurately and carefully, to the best of your knowledge. You may need to consult with an agency specialist or private consultant for some questions. You may use "not applicable" or "does not apply" only when you can explain why it does not apply and not when the answer is unknown. You may also attach or incorporate by reference additional studies reports. Complete and accurate answers to these questions often avoid delays with the SEPA process as well as later in the decisionmaking process.

The checklist questions apply to all parts of your proposal, even if you plan to do them over a period of time or on different parcels of land. Attach any additional information that will help describe your proposal or its environmental effects. The agency to which you submit this checklist may ask you to explain your answers or provide additional information reasonably related to determining if there may be significant adverse impact.

Instructions for lead agencies:

Please adjust the format of this template as needed. Additional information may be necessary to evaluate the existing environment, all interrelated aspects of the proposal and an analysis of adverse impacts. The checklist is considered the first but not necessarily the only source of information needed to make an adequate threshold determination. Once a threshold determination is made, the lead agency is responsible for the completeness and accuracy of the checklist and other supporting documents.

Use of checklist for non-project proposals:

For non-project proposals (such as ordinances, regulations, plans and programs), complete the applicable parts of sections A and B plus the SUPPLEMENTAL SHEET FOR NONPROJECT ACTIONS (part D). Please completely answer all questions that apply and note that the words "project," "applicant," and "property or site" should be read as "proposal," "proponent," and "affected geographic area," respectively. The lead agency may exclude (for non-projects) questions in Part B - Environmental Elements –that do not contribute meaningfully to the analysis of the proposal.

DRAFT 12/06/2023 4:48:12 PM

A. Background [HELP]

1. Name of proposed project, if applicable:

Central Kitsap Wastewater Treatment Plant - Solids and Hauled Waste Upgrades Project

2. Name of applicant:

Nick Martin, Kitsap County Public Works

3. Address and phone number of applicant and contact person:

12351 N Brownsville Hwy, Poulsbo, WA 360-337-5631

4. Date checklist prepared: September 28, 2023

5. Agency requesting checklist: Kitsap County Department of Community Development

6. Proposed timing or schedule (including phasing, if applicable):

Construction is anticipated to begin in 2024 and last approximately 2 years. The project would not be phased.

7. Do you have any plans for future additions, expansion, or further activity related to or connected with this proposal? If yes, explain.

No future additions or expansions are planned as part of the project.

8. List any environmental information you know about that has been prepared, or will be prepared, directly related to this proposal.

The following environmental information has been prepared for the project: Phase I ESA and geotechnical investigation.

9. Do you know whether applications are pending for governmental approvals of other proposals directly affecting the property covered by your proposal? If yes, explain.

No applications are currently pending that would affect the project site.

DRAFT 12/06/2023 4:48:12 PM

10. List any government approvals or permits that will be needed for your proposal, if known.

The following permits are anticipated: USACE Section 404; Department of Ecology 401 certification and Coastal Zone Management consistency determination; NPDES notification for updates to existing NPDES permit coverage; WDFW HPA; Kitsap County Building permit, site development permit, road approach permit, Conditional Use Permit, Minor Amendment; Puget Sound Clean Air Agency Notice of Construction.

11. Give brief, complete description of your proposal, including the proposed uses and the size of the project and site. There are several questions later in this checklist that ask you to describe certain aspects of your proposal. You do not need to repeat those answers on this page. (Lead agencies may modify this form to include additional specific information on project description.)

Kitsap County Public Works Sewer Utility Division (PWSUD) is proposing modifications to the existing Central Kitsap Treatment Plant to address the aging equipment, rise in demand, and permit adjustments which have manifested as capacity challenges, operational, maintenance and performance issues. The Central Kitsap WWTP provides wastewater treatment for much of the central Kitsap Peninsula. Solids, including those hauled from the County's other treatment plants, are thickened, and digested anaerobically at CKTP before dewatering and disposal. CKTP also receives Liquid Hauled Waste (LHW) in the form of septage and fats, oils, and grease (FOG). The key components of the current plant solids handling facilities include gravity thickeners, boiler-heated anaerobic digesters, a septage receiving station, and an in-plant pump station.
The Project is implementing recommendations through a capital upgrade of existing solids and liquid hauled waste handling facilities at the CKTP. Proposed improvements at the CKTP include the following elements:
• Replacement Operation and Maintenance (O&M) Building to make room for the new digesters.
• New mechanical sludge thickening
• Two new 0.65-million-gallon anaerobic digesters
• New fats, oils, and grease receiving station
• New septage receiving station
• New In-plant pump station

12. Location of the proposal. Give sufficient information for a person to understand the precise location of your proposed project, including a street address, if any, and section, township, and range, if known. If a proposal would occur over a range of area, provide the range or boundaries of the site(s). Provide a legal description, site plan, vicinity map, and topographic map, if reasonably available. While you should submit any plans required by the agency, you are not required to duplicate maps or detailed plans submitted with any permit applications related to this checklist.

The project is located on Kitsap County Parcel No. 112501-1-021-2006 and 112501-1-035-2000 in Sections 11 and 12, Township 25N, Range 1E Kitsap County WA.

DRAFT
12/06/2023 4:48:12 PM

B. Environmental Elements [HELP] If you run out of room in the box, you may attach a supplemental document available under tools>comments.

1. Earth [help]

a. General description of the site: (check one):

(●) Flat ( ) rolling ( ) hilly ( ) steep slopes ( ) mountainous
( ) other _____

b. What is the steepest slope on the site (approximate percent slope)?

Slopes on the site are generally about 5% overall with some site features having slopes less than 15%.

c. What general types of soils are found on the site (for example, clay, sand, gravel, peat, muck)? If you know the classification of agricultural soils, specify them and note any agricultural land of long-term commercial significance and whether the proposal results in removing any of these soils.

The United States Department of Agriculture Soil Conservation Service (SCS) classifies the soil units at the Project are Alderwood gravelly sandy loam, 8-15 percent slopes, Kapowsin gravelly ashy loam, 0 -6 percent slopes, Mukilteo peat, and Norma fine sandy loam. The project does not propose impacts to agricultural land of long-term commercial significance.

d. Are there surface indications or history of unstable soils in the immediate vicinity? If so, describe.

Per the critical areas data layer available on the Kitsap County Parcel Map, the southwest portion of the CKTP is mapped as a moderate seismic hazard area. The northeast portion of the site is mapped as having a very low liquefaction susceptibility by the Washington Department of Natural Resources Geologic Information Portal. The remainder of the project site is mapped as having a moderate to high liquefaction susceptibility.

e. Describe the purpose, type, total area, and approximate quantities and total affected area of any filling, excavation, and grading proposed. Indicate source of fill.

The project will include fill, excavation and grading for various items on the site. Proposed volumes will be available near the 30% design development level.

f. Could erosion occur as a result of clearing, construction, or use? If so, generally describe.

Clearing and excavation during construction could result in a short-term erosion hazard as bare soils become exposed to wind, rainfall, or vehicle activity within the Project site. Site clearing, site preparation, and earthwork is recommended during periods of warm, dry weathter. Section B.1.h below includes typical best management practices (BMPs) and other measures that could be used to minimize the potential for erosion.

g. About what percent of the site will be covered with impervious surfaces after project construction (for example, asphalt or buildings)?

The project will include new impervious surfaces on the site. Proposed percentages will be available near the 30% design development level.

h. Proposed measures to reduce or control erosion, or other impacts to the earth, if any:

Appropriate erosion control measures would be implemented prior to clearing, grading, or excavation activities. An Erosion and Sedimentation Control (ESC) Plan will be developed and implemented following the guidance and recommendations in the Department of Ecology's 2019 Stormwater Management Manual for Western Washington, and 2021 Kitsap County Stormwater Manual to address erosion control during and after construction and may include, but not be limited to:
• Collection and controlling stormwater flow in accordance with the SWPPP
• Installation of filter fabric fences around disturbed areas
• Installation of silt traps in storm drain inlets
• Stabilization of temporary soil stockpiles and exposed solids
• Permanent stabilization of disturbed areas after construction is completed
• Use of appropriate means to minimize tracking of sediment onto public roadways by construction vehicles
• Designation of personnel to inspect and maintain temporary erosion and sediment control measures.

DRAFT
12/06/2023 4:48:12 PM

2. Air [help]

a. What types of emissions to the air would result from the proposal during construction, operation, and maintenance when the project is completed? If any, generally describe and give approximate quantities if known.

Short term, temporary air emissions may occur during construction from equipment such as vehicle exhaust and fugitive dust. Although the project will include odor control for thickening and septage and FOG, odor from project operations may still be discernible in the project vicinity. No additional emissions would be generated by the project over existing conditions.

b. Are there any off-site sources of emissions or odor that may affect your proposal? If so, generally describe.

There are no known off-site sources of emissions or odor that may affect this proposal.

c. Proposed measures to reduce or control emissions or other impacts to air, if any:

If necessary, BMPs would be used to control temporary air pollutant emissions in construction areas. Those may consist of requiring proper maintenance of construction equipment, avoiding prolonged idling of vehicles and spraying water to minimize dust.

New facilities will be provided with odor control through the implementation of engineered biofilters. Air from new facilities will be collected and directed through the new biofilters to remove foul odors.

3. Water [help]

a. Surface Water: [help]

1) Is there any surface water body on or in the immediate vicinity of the site (including year-round and seasonal streams, saltwater, lakes, ponds, wetlands)? If yes, describe type and provide names. If appropriate, state what stream or river it flows into.

Per the US Fish and Wildlife National Wetland Inventory, four Palustrine unconsolidated bottom, artificially flooded, excavated (PUBKx) wetlands and one freshwater emergent wetland (PEM1Cd) are mapped at the Project site. A riverine wetland is mapped bisecting the CKTP facility from north to south. Hydric soils are mapped along the western and southern portion of the Project site.

2) Will the project require any work over, in, or adjacent to (within 200 feet) the described waters? If yes, please describe and attach available plans.

This will be determined near the 30% design development level.

DRAFT
12/06/2023 4:48:12 PM

3) Estimate the amount of fill and dredge material that would be placed in or removed from surface water or wetlands and indicate the area of the site that would be affected. Indicate the source of fill material.

No dredging or fill is anticipated within surface water or wetlands.

4) Will the proposal require surface water withdrawals or diversions? Give general description, purpose, and approximate quantities if known.

No surface water withdrawals or diversions are anticipated as part of the project.

5) Does the proposal lie within a 100-year floodplain? If so, note location on the site plan.

Per the Federal Emergency Management Agency Firm Map Panel 53035C0220F (effective 2/3/2017), the Project site is in Zone X, an area of minimal flood hazard.

6) Does the proposal involve any discharges of waste materials to surface waters? If so, describe the type of waste and anticipated volume of discharge.

No waste materials will be discharged to surface waters.

b. Ground Water: [help]

1) Will groundwater be withdrawn from a well for drinking water or other purposes? If so, give a general description of the well, proposed uses and approximate quantities withdrawn from the well. Will water be discharged to groundwater? Give general description, purpose, and approximate quantities if known.

No groundwater would be withdrawn from a well for drinking water or other purposes as part of the project.

DRAFT
12/06/2023 4:48:12 PM

2) Describe waste material that will be discharged into the ground from septic tanks or other sources, if any (for example: Domestic sewage; industrial, containing the following chemicals. . . ; agricultural; etc.). Describe the general size of the system, the number of such systems, the number of houses to be served (if applicable), or the number of animals or humans the system(s) are expected to serve.

No waste material would be discharged into the ground from septic tanks or other sources as a result of the Project.

c. Water runoff (including stormwater):

1) Describe the source of runoff (including storm water) and method of collection and disposal, if any (include quantities, if known). Where will this water flow? Will this water flow into other waters? If so, describe.

The existing source of runoff is from stormwater. All new pollutant generating surfaces will run their stormwater into the existing treatment plant stormwater system and will run to the headworks of the plant. Non pollutant generating surfaces may be routed to drywells for infiltration if soils are found to be suitable.

2) Could waste materials enter ground or surface waters? If so, generally describe.

During construction, the County will implement BMPs to prevent introduction of contaminants into ground and surface waters, which could include:
• Storing fuels and other potential contaminants in secured containment areas
• Containing equipment, materials, and wash water associated with construction
• Conducting regular inspections, maintenance, and repairs of fuel hoses, hydraulically operated equipment, lubrication equipment, and chemical/petroleum storage containers
• Maintaining spill containment and clean up material at construction sites
• Establishing a communication protocol for handling potential spills

3) Does the proposal alter or otherwise affect drainage patterns in the vicinity of the site? If so, describe.

No alteration to the the existing drainage patterns are proposed.

d. Proposed measures to reduce or control surface, ground, and runoff water, and drainage pattern impacts, if any

The stormwater controls will follow requirements of local, state and federal guidelines.

DRAFT
12/06/2023 4:46:12 PM

4. Plants [help]

a. Check the types of vegetation found on the site:

- [x] deciduous tree: alder, maple, aspen, other
- [x] evergreen tree: fir, cedar, pine, other
- [x] shrubs
- [x] grass
- [ ] pasture
- [ ] crop or grain
- [ ] Orchards, vineyards or other permanent crops.
- [ ] wet soil plants: cattail, buttercup, bullrush, skunk cabbage, other
- [ ] water plants: water lily, eelgrass, milfoil, other
- [ ] other types of vegetation

b. What kind and amount of vegetation will be removed or altered?

This will be determined near the 30% design development level.

c. List threatened and endangered species known to be on or near the site.

Per a review of the USFWS Information for Planning and Consultation and the Washington DNR rare plant and ecosystems mapping, no federally or state-listed threatened or endangered plants are known to occur in the project area.

d. Proposed landscaping, use of native plants, or other measures to preserve or enhance vegetation on the site, if any:

Scarified and disturbed surfaces left for landscaping are intended to be seeded with wildland grasses or planted with low growing plantings that are native to the region.

e. List all noxious weeds and invasive species known to be on or near the site.

No noxious weeds are known to be located on the project site.

5. Animals [help]

a. List any birds and other animals which have been observed on or near the site or are known to be on or near the site. Examples include: birds: hawk, heron, eagle, songbirds, other: mammals: deer, bear, elk, beaver, other: fish: bass, salmon, trout, herring, shellfish, other

Hawk, songbirds, trout, deer

DRAFT 12/06/2023 4:48:12 PM

b. List any threatened and endangered species known to be on or near the site.

The USFWS Information for Planning and Consultation lists the following threatened species as potentially occurring in Kitsap County: marbled murrelet, yellow-billed cuckoo, and bull trout. No critical habitat for these species is designated near the Project site. Per a review of WDFW PHS and SalmonScape databases, bull trout are not mapped as being present in Royal Valley Creek. Due to the lack of suitable habitat for marbled murrelet and yellow-billed cuckoo, these species are unlikely to be present in the Project area.

c. Is the site part of a migration route? If so, explain.

The project area lies within the Pacific Flyway, an avian migratory corridor of western coastal areas of South, Central and North America.

d. Proposed measures to preserve or enhance wildlife, if any:

No measures are proposed to preserve or enhance wildlife.

e. List any invasive animal species known to be on or near the site.

No known invasive animal species are on or near the site.

6. Energy and Natural Resources [help]

a. What kinds of energy (electric, natural gas, oil, wood stove, solar) will be used to meet the completed project's energy needs? Describe whether it will be used for heating, manufacturing, etc.

Electricity will be used to heat and operate equipment. A back-up generator fueled by natural gas would be utilized in the event of power outages.

b. Would your project affect the potential use of solar energy by adjacent properties? If so, generally describe.

The project would not affect the potential use of solar power by adjacent properties.

c. What kinds of energy conservation features are included in the plans of this proposal? List other proposed measures to reduce or control energy impacts, if any:

No energy conservation features are proposed as part of the project. No energy impacts are anticipated as a results of the project; therefore, no mitigation measures are proposed.

DRAFT
12/06/2023 4:48:12 PM

7. Environmental Health [help]

a. Are there any environmental health hazards, including exposure to toxic chemicals, risk of fire and explosion, spill, or hazardous waste, that could occur as a result of this proposal? If so, describe.

No environmental health hazards are anticipated to occur as a result of this proposal.

1) Describe any known or possible contamination at the site from present or past uses.

The project site is listed in the Department of Ecology's Confirmed or Suspected Contaminated Sites database for confirmed benzene, petroleum-diesel and petroleum-gasoline contamination in groundwater and confirmed benzene, petroluem-diesel, petroleum-gasoline, and petroleum-other to soil.

2) Describe existing hazardous chemicals/conditions that might affect project development and design. This includes underground hazardous liquid and gas transmission pipelines located within the project area and in the vicinity.

No hazardous liquid or gas transmission pipelines are located within the project area or the vicinity.

3) Describe any toxic or hazardous chemicals that might be stored, used, or produced during the project's development or construction, or at any time during the operating life of the project.

Construction-related materials such as fuel and hydraulic fluid will be stored and used on-site during construction. BMPs will be implemented during construction to minimize the potential for spills or mechanical failures to occur, and to minimize the potential for adverse effects from hazardous chemicals. During operations, polymer emulsion chemicals would be utilized and would be stored in appropriate chemical storage areas in accordance with state and local regulations.

4) Describe special emergency services that might be required.

No special emergency service needs are anticipated for the proposed project.

5) Proposed measures to reduce or control environmental health hazards, if any:

The selected contractor would be required to provide an emergency response plan and practice proper hazardous material storage, handling, and emergency procedures including spill notification and response requirements. BMPs would be in place to minimize any impacts to environmental health. During operations, Once operational, facility staff will adhere requirements and guidelines for the proper storage, handling, disposal, and clean-up of hazardous materials.

DRAFT 12/06/2022 4:48:12 PM

b. Noise

1) What types of noise exist in the area which may affect your project (for example: traffic, equipment, operation, other)?

Noise in the project area will not affect the project.

2) What types and levels of noise would be created by or associated with the project on a short-term or a long-term basis (for example: traffic, construction, operation, other)? Indicate what hours noise would come from the site.

Short-term construction noise impacts would occur from construction equipment in the project area. Construction would occur during allowable construction hours per Kitsap County Code.
During operation, noise will occur from operating mechanical equipment, including HVAC, odor control, pumps, and the standby generator in the event of a power outage.

3) Proposed measures to reduce or control noise impacts, if any:

Short-term construction noise impacts would occur within the timeframe allowed under the Kitsap County's noise ordinances.

8. Land and Shoreline Use [help]

a. What is the current use of the site and adjacent properties? Will the proposal affect current land uses on nearby or adjacent properties? If so, describe.

The project site is currently occupied by the Central Kitsap Treatment Plant and a facilities associated with a former construction company.

b. Has the project site been used as working farmlands or working forest lands? If so, describe. How much agricultural or forest land of long-term commercial significance will be converted to other uses as a result of the proposal, if any? If resource lands have not been designated, how many acres in farmland or forest land tax status will be converted to nonfarm or non-forest use?

Not applicable. The project site has not been used as working farmlands or forest lands. No agricultural or forest land of long-term commercial significance would be converted.

DRAFT 12/06/2023 4:48:12 PM

1) Will the proposal affect or be affected by surrounding working farm or forest land normal business operations, such as oversize equipment access, the application of pesticides, tilling, and harvesting? If so, how:

The proposed work will not affect or be affected by surrounding working farm or forest land normal business operations.

c. Describe any structures on the site.

Existing structures associated with the Central Kitsap Treatment Plant and the former construction company include administrative building and labs, gravity thickeners, digesters and control, dewatering, septage and FOG and headworks.

d. Will any structures be demolished? If so, what?

Structures associated with the former construction company on the eastern portion of the project site and the existing Operations and Maintenance Building would demolished.

e. What is the current zoning classification of the site?

The current zoning of the site is rural residential (RR)

f. What is the current comprehensive plan designation of the site?

The current comprehensive plan designation of the site is rural residential and public facility.

g. If applicable, what is the current shoreline master program designation of the site?

Not applicable. The site is not located within the shoreline district.

h. Has any part of the site been classified as a critical area by the city or county? If so, specify.

Critical areas identified on-site include wetlands, fish and wildlife habitat conservation areas (Royal Valley Creek), geologically hazardous areas (moderate seismic hazard area) and Class II Critical Aquifer Recharge Area.

i. Approximately how many people would reside or work in the completed project?

This will be determined near the 30% design development level.

j. Approximately how many people would the completed project displace?

Not applicable. No displacements would occur as a result of the project.

k. Proposed measures to avoid or reduce displacement impacts, if any:

No displacements are anticipated; therefore, no mitigation measures are proposed.

DRAFT
12/06/2023 4:48:12 PM

l. Proposed measures to ensure the proposal is compatible with existing and projected land uses and plans, if any:

The Project is a long planned utility project and was outlined in the 2011 Central Kitsap Wastewater Facility Plan.

m. Proposed measures to reduce or control impacts to agricultural and forest lands of long-term commercial significance, if any:

No impacts to agricultural or forest lands of long-term significance are anticipated. Therefore, no mitigation measures are proposed.

9. Housing [help]

a. Approximately how many units would be provided, if any? Indicate whether high, middle, or low-income housing.

Not applicable. No housing will be provided as part of the project.

b. Approximately how many units, if any, would be eliminated? Indicate whether high, middle, or low-income housing.

Not applicable. No housing would be eliminated as part of the project.

c. Proposed measures to reduce or control housing impacts, if any:

No impacts to housing are anticipated as a result of the project; therefore, no mitigation measures are proposed.

10. Aesthetics [help]

a. What is the tallest height of any proposed structure(s), not including antennas; what is the principal exterior building material(s) proposed?

The tallest proposed structure would be 30 feet in height.

b. What views in the immediate vicinity would be altered or obstructed?

No views in the immediate vicinity would be altered or obstructed.

c. Proposed measures to reduce or control aesthetic impacts, if any:

No impacts to aesthetics are anticipated as a result of the project. Therefore, no mitigation measures are proposed.

DRAFT
12/06/2023 4:48:12 PM

11. Light and Glare [help]

a. What type of light or glare will the proposal produce? What time of day would it mainly occur?

New exterior security lighting is proposed and would be utilized at night.

b. Could light or glare from the finished project be a safety hazard or interfere with views?

New security lighting would be full cutoff to reduce light and glare impacts. Security lighting would not pose a safety hazard.

c. What existing off-site sources of light or glare may affect your proposal?

No existing off-site sources of light or glare would affect the project.

d. Proposed measures to reduce or control light and glare impacts, if any:

New security lighting would be full cutoff to reduce light and glare impacts.

12. Recreation [help]

a. What designated and informal recreational opportunities are in the immediate vicinity?

No designated or informal recreational opportunities are in the immediate vicinity of the project. The nearest recreational opportunities are Keyport Saltwater Park, located approximately 1.8 miles to the north, and the Port of Brownsville Park, located approximately 1.6 miles to the southeast.

b. Would the proposed project displace any existing recreational uses? If so, describe.

No recreational uses would be displaced by the project.

c. Proposed measures to reduce or control impacts on recreation, including recreation opportunities to be provided by the project or applicant, if any:

No impacts to recreation would result from the project. Therefore, no mitigation measures are proposed.

DRAFT
12/06/2023 4:48:13 PM

13. Historic and cultural preservation [help]

a. Are there any buildings, structures, or sites, located on or near the site that are over 45 years old listed in or eligible for listing in national, state, or local preservation registers? If so, specifically describe.

This will be determined near the 30% design development level.

b. Are there any landmarks, features, or other evidence of Indian or historic use or occupation? This may include human burials or old cemeteries. Are there any material evidence, artifacts, or areas of cultural importance on or near the site? Please list any professional studies conducted at the site to identify such resources.

This will be determined near the 30% design development level.

c. Describe the methods used to assess the potential impacts to cultural and historic resources on or near the project site. Examples include consultation with tribes and the department of archeology and historic preservation, archaeological surveys, historic maps, GIS data, etc.

A DAHP GEO 21-02 Form will be filed near the 30% design development level. The SEPA application will be updated prior to formal application to Kitsap County Department of Community Development.

d. Proposed measures to avoid, minimize, or compensate for loss, changes to, and disturbance to resources. Please include plans for the above and any permits that may be required.

This will be determined near the 30% design development level.

14. Transportation [help]

a. Identify public streets and highways serving the site or affected geographic area and describe proposed access to the existing street system. Show on site plans, if any.

The site is accessible via Brownsville Highway NE.

DRAFT
12/06/2025 4:48:13 PM

b. Is the site or affected geographic area currently served by public transit? If so, generally describe. If not, what is the approximate distance to the nearest transit stop?

The project is not currently served by public transit. The nearest transit location is approximately 2.3 miles to the southwest.

c. How many additional parking spaces would the completed project or non-project proposal have? How many would the project or proposal eliminate?

This will be determined near the 30% design development level.

d. Will the proposal require any new or improvements to existing roads, streets, pedestrian, bicycle, or state transportation facilities, not including driveways? If so, generally describe (indicate whether public or private).

Not applicable. The project would not require any new or improvements to the existing transportation infrastructure.

e. Will the project or proposal use (or occur in the immediate vicinity of) water, rail, or air transportation? If so, generally describe.

The project would not be located in the immediate vicinity of water, rail, or air transportation.

f. How many vehicular trips per day would be generated by the completed project or proposal? If known, indicate when peak volumes would occur and what percentage of the volume would be trucks (such as commercial and non-passenger vehicles). What data or transportation models were used to make these estimates?

Not applicable. No additional vehicle trips would be generated by the completion of the project.

g. Will the proposal interfere with, affect, or be affected by the movement of agricultural and forest products on roads or streets in the area? If so, generally describe.

The Project would not affect or be affected by the movement of agricultural or forest products.

h. Proposed measures to reduce or control transportation impacts, if any:

No impacts to transportation are anticipated as a result of the project. Therefore, no mitigation measures are proposed.

DRAFT
12/06/2023 4:48:13 PM

15. Public Services [help]

a. Would the project result in an increased need for public services (for example: fire protection, police protection, public transit, health care, schools, other)? If so, generally describe.

The project would not result in an increased need for public services.

b. Proposed measures to reduce or control direct impacts on public services, if any.

The project would not result in the increased need for public services; therefore, no mitigation measures are proposed.

16. Utilities [help]

a. Check utilities currently available at the site:

- [x] electricity
- [ ] natural gas
- [x] water
- [x] refuse service
- [x] telephone
- [x] sanitary sewer
- [ ] septic system
- [ ] other _____

b. Describe the utilities that are proposed for the project, the utility providing the service, and the general construction activities on the site or in the immediate vicinity which might be needed.

Electricity, Water, Telephone, Natural Gas

C. Signature [HELP]

The above answers are true and complete to the best of my knowledge. I understand that the lead agency is relying on them to make its decision.

Signature: Andrew Staples, PE

Name of signee Andrew Staples

Position and Agency/Organization Project Manager, HDR Engineering

Date Submitted: 12/6/2023

DRAFT 12/06/2023 4:48:13 PM

D. Supplemental sheet for non-project actions [HELP]

(**IT IS NOT NECESSARY** to use this sheet for project actions)

Because these questions are very general, it may be helpful to read them in conjunction with the list of the elements of the environment.

When answering these questions, be aware of the extent the proposal, or the types of activities likely to result from the proposal, would affect the item at a greater intensity or at a faster rate than if the proposal were not implemented. Respond briefly and in general terms.

1. How would the proposal be likely to increase discharge to water; emissions to air; production, storage, or release of toxic or hazardous substances; or production of noise? Proposed measures to avoid or reduce such increases are:

2. How would the proposal be likely to affect plants, animals, fish, or marine life? Proposed measures to protect or conserve plants, animals, fish, or marine life are:

3. How would the proposal be likely to deplete energy or natural resources? Proposed measures to protect or conserve energy and natural resources are:

DRAFT
12/06/2023 4:48:13 PM

4. How would the proposal be likely to use or affect environmentally sensitive areas or areas designated (or eligible or under study) for governmental protection; ex: parks, wilderness, wild and scenic rivers, threatened or endangered species habitat, historic or cultural sites, wetlands, floodplains, or prime farmlands?

Proposed measures to protect such resources or to avoid or reduce impacts are:

5. How would the proposal be likely to affect land and shoreline use, including whether it would allow or encourage land or shoreline uses incompatible with existing plans? Proposed measures to avoid or reduce shoreline and land use impacts are:

6. How would the proposal be likely to increase demands on transportation or public services and utilities? Proposed measures to reduce or respond to such demand(s) are:

7. Identify, if possible, whether the proposal may conflict with local, state, or federal laws or requirements for the protection of the environment

DRAFT
12/06/2023 4:48:13 PM

Appendix K. SCADA Master Plan References and Preferred Equipment

TM-3: Technology Selection

Sewer Utility SCADA Master Plan

Kitsap County Public Works
Sewer Utility Division

December 10, 2021

This page intentionally left blank.

Kitsap County Public Works, Sewer Utility Division
Sewer Utility SCADA Master Plan

TM-3: Technology Selection

December 10, 2021

Prepared by:

Brandon Erndt, PE
HDR Engineering, Inc.
(602) 522-7712

Christopher Maras, PE
HDR Engineering, Inc.
(402) 208-7051

and

Bruce Johnston, PE
HDR Engineering, Inc.
(425) 450-6217

I hereby certify that the technical memorandum was prepared under my direct supervision and that I am a duly registered Engineer under the laws of the State of Washington.

Contents

1 Introduction 1-1
1.1 Approach 1-1
1.2 Technical Memorandum Organization 1-1
1.2.1 Structure 1-1
2 Previously Selected Technology 2-1
2.1 Network Architecture 2-1
2.2 Industrial Control System Hardware 2-1
2.3 Industrial Control System Software 2-2
2.4 Other Software Packages 2-2
3 OT Network Architecture Technology and Software 3-1
3.1 Network Equipment Evaluation 3-1
3.2 Managed Network Switches 3-1
3.2.1 Industrial Panel-Mounted Network Switches 3-1
3.2.2 Cost 3-3
3.2.3 Rack-Mounted Switches (with Redundant Network Access) 3-3
3.2.4 Cost 3-5
3.3 Uninterrupted Power Supplies 3-5
3.3.1 Control Panel Uninterrupted Power Supply 3-6
3.3.2 Cost 3-7
3.3.3 Rackmount Uninterrupted Power Supply 3-8
3.3.4 Cost 3-10
3.4 OT Cybersecurity and Disaster Recovery 3-10
3.4.1 OT Access Control 3-10
3.4.2 OT Network Monitoring and Logging Software 3-10
3.4.3 Cost 3-11
3.5 Multifactor Authentication for HMI Software 3-11
3.6 Version Control and Backup Software for OT Systems 3-11
3.6.1 Version Control Software 3-12
3.6.2 Version Control Software Cost 3-13
3.6.3 Secure Offline Storage 3-14
3.6.4 Secure Offline Storage Cost 3-14
4 PLC Hardware and Software 4-1
4.1 Allen-Bradley CompactLogix 5380 Controller and Compact 5000 I/O Standard Components 4-1
4.1.1 Controller 4-1
4.1.2 EtherNet/IP Adapter 4-3
4.1.3 Power Supply Considerations 4-4
4.1.4 I/O Modules 4-5
4.1.5 End Cap 4-8
4.1.6 Recommended Standard Component Summary Table 4-9
4.2 PLC Programming Software 4-10
4.3 PLC Platform Evaluation 4-10
4.3.1 Ease of Migration 4-10
4.3.2 Capability 4-11
4.3.3 Cost 4-12

5 References 5-1

Tables

Table 2-1. Summary of previously selected network architecture technology 2-1
Table 2-2. Summary of previously selected ICS hardware technology 2-2
Table 2-3. Summary of previously selected ICS software technology 2-2
Table 2-4. Summary of previously selected additional software packages 2-3
Table 3-1. Allen-Bradley Stratix switches 3-3
Table 3-2. Cisco Catalyst 9000 switches 3-5
Table 3-3. APC Smart-UPS SRT 1500, UPS Network Management Card 3-8
Table 3-4. APC Smart-UPS SRT 1500 Rackmount, APC Smart-UPS SRT Battery Pack 3-10
Table 3-5. Network monitoring and logging software 3-11
Table 3-6. Network monitoring and logging software 3-14
Table 3-7. LTO-7 tape drive and storage media 3-14
Table 3-8. Off-site Storage Service 3-14
Table 4-1. Allen-Bradley CompactLogix 5380 controller and Compact 5000 I/O platform standard components summary 4-9
Table 4-2. Allen-Bradley CompactLogix 5380 and ControlLogix 5580 controller comparison 4-12
Table 4-3. Allen-Bradley CompactLogix 5380 and ControlLogix 5580 component cost comparison 4-13

Figures

Figure 3-1. Allen-Bradley Stratix switch 3-3
Figure 3-2. Cisco Catalyst 9000 family switch 3-5
Figure 3-3. APC Smart-UPS SRT 1500 Tower 3-7
Figure 3-4. APC Smart-UPS SRT 1500 Rackmount 3-9
Figure 3-5. APC Smart-UPS SRT Battery Pack 3-10
Figure 3-6. Logical relationships of Rockwell software products required for FactoryTalk AssetCentre 3-13
Figure 4-1. Allen-Bradley CompactLogix 5380 controller with Compact 5000 I/O modules 4-1
Figure 4-2. Allen-Bradley 5069-L320ER CompactLogix 5380 controller 4-2
Figure 4-3. Allen-Bradley 5069-AEN2TR Compact 5000 I/O EtherNet/IP adapter 4-4
Figure 4-4. Allen-Bradley 5069-IF8 Compact 5000 I/O analog input module 4-5
Figure 4-5. Allen-Bradley 5069-OF8 Compact 5000 I/O analog output module 4-6
Figure 4-6. Allen-Bradley 5069-IB16F Compact 5000 I/O digital input module 4-7
Figure 4-7. Allen-Bradley 5069-OB16 Compact 5000 I/O digital output module 4-8
Figure 4-8. Allen-Bradley 5069-ECR CompactLogix 5380 and Compact 5000 I/O end cap 4-9

Abbreviations

°F	degree(s) Fahrenheit
AD	Active Directory
BGP	Border Gateway Protocol
CIP	Common Industrial Protocol
CKTP	Central Kitsap Treatment Plant
CMMS	computerized maintenance management system
County	Kitsap County
DLR	Device Level Ring
DMZ	demilitarized zone
DNP3	Distributed Network Protocol 3
DS	Domain Server
EIGRP	Enhanced Interior Gateway Routing Protocol
FNF	flexible netflow
FT	FactoryTalk
GB	gigabyte(s)
Gbps	gigabit(s) per second
HDR	HDR Engineering, Inc.
HMI	human-machine interface
HSRP	Hot Standby Router Protocol
I&C	instrumentation and controls
ICS	industrial control system
IEEE	Institute of Electrical and Electronics Engineers
IGMP	Internet Group Management Protocol
I/O	input/output
IoT	Internet of Things
IP	Internet Protocol
IS-IS	Intermediate System to Intermediate System
LAN	local-area network
LED	light-emitting diode
LIMS	laboratory information management system
LTE	Long-Term Evolution
M2M	machine-to-machine
Master Plan	*Sewer Utility SCADA Master Plan*
MB	megabyte(s)
Mbps	megabit(s) per second
MCC	motor control center
MOD	module
N/A	not applicable
NFPA	National Fire Protection Association
NMS	network monitoring system
OSPF	Open Shortest Path First
OT	Operational Technology
PBR	Policy-Based Routing
PC	personal computer
PCAP	Network Packet Analyzer and Capture
PLC	programmable logic controller
QCC	Quality Controls Corporation
QoS	quality of service
RIO	remote input/output
RIP	Routing Information Protocol
RTD	resistance temperature detector
RTU	remote telemetry unit

SA	sensor/actuator
SCADA	supervisory control and data acquisition
SD	Secure Digital
SDN	software-defined network
Sewer Utility	Public Works Sewer Utility Division
SFP	small form-factor pluggable
SNMP	Simple Network Management Protocol
SPB	solids processing building
SVI	Switched Virtual Interface
TM	technical memorandum
TM-2	*SCADA Use Cases and Operational Needs Technical Memorandum*
TM-3	*Technology Selection Technical Memorandum*
TM-4	*Sewer Utility SCADA Master Plan Technical Memorandum*
TP/TX	Transport Protocol/Transmit
uRPF	Unicast Reverse Path forwarding
USB	Universal Serial Bus
UV	ultraviolet
V	volt(s)
VAC	volt(s) alternating current
VDC	volt(s) direct current
VM	virtual machine
VRF	Virtual Routing and Forwarding
VRRP	Virtual Router Redundancy Protocol
WAN	wide-area network
WIMS	Water Information Management Solution
WWTP	wastewater treatment plant

1 Introduction

This *Technology Selection Technical Memorandum* (TM-3) documents the specific hardware and software platforms selected to become the new standard for the Kitsap County (County) Public Works Sewer Utility Division (Sewer Utility) supervisory control and data acquisition (SCADA) system. This technical memorandum (TM) describes the evaluation approach by which these technological elements were selected based on the Sewer Utility's existing infrastructure and its future operational needs identified in the *SCADA Use Cases and Operational Needs Technical Memorandum* (TM-2). These platforms will serve as the building blocks for the system architecture conceptual design to be developed in the subsequent *Sewer Utility SCADA Master Plan Technical Memorandum* (TM-4).

1.1 Approach

TM-3 completes the third phase of the *Sewer Utility SCADA Master Plan* (Master Plan), which is to identify the hardware and software platforms that will be the foundational SCADA equipment for use by the Sewer Utility going forward. The hardware and software selections are based on the existing SCADA equipment condition and useful life cycle as well as the Operational Needs and Deficiencies Assessment completed in the previous TMs.

In addition, the hardware and software selections identified in this TM-3 support the requirements needed to appropriately design the conceptual control system architecture in Phase 4.

A meeting was held in June 2021 to review the previously selected technology for both the Operational Technology (OT) network and control system equipment. Preferences for additional required OT network equipment and software and the system architecture conceptual design were also discussed.

1.2 Technical Memorandum Organization

This section describes the structure of the TM and the annotation for addressing the operational needs identified in TM-2 and recommended improvements.

1.2.1 Structure

TM-3 is organized into five sections, as described below:

- **Section 1: Introduction** summarizes the TM organization and the approach taken for the third phase of the Master Plan in preparation for TM-3.
- **Section 2: Previously Selected Technology** provides a summary of the various SCADA-related hardware and software platforms that the Sewer Utility has selected prior to or in parallel with the Master Plan and that will remain part of the Sewer Utility's core technological assets into the future.
- **Section 3: OT Network Architecture Technology and Software** describes the network architecture technology components and software products selected for

future Sewer Utility OT network improvements and software to support the SCADA-related assets. The section also provides a summary of the features of each of these components and software products as related to the Sewer Utility's system.

- **Section 4: PLC Hardware and Software** describes the Allen-Bradley CompactLogix 5380 controller and Compact 5000 input/output (I/O) platform components selected as the new Sewer Utility standard for wastewater treatment plant (WWTP) and remote pump station programmable logic controller (PLC) design and implementation. The section also provides a summary of the evaluation approach by which these PLC components were selected.
- **Section 5: References** lists the supporting source materials cited in TM-3.

This page intentionally left blank.

2 Previously Selected Technology

This section provides a summary of the various SCADA-related hardware and software platforms that the Sewer Utility has selected prior to or in parallel with the Master Plan and that will remain part of the Sewer Utility's core technological assets into the future. Technology selected in TM-3 will be combined with the Sewer Utility's previously selected technology to form a cohesive system.

2.1 Network Architecture

Previously selected network architecture technology is summarized in Table 2-1.

Table 2-1. Summary of previously selected network architecture technology

Manufacturer/ vendor	Product/model	Description	Application
Tempered Networks	Airwall system	Software-defined network (SDN) technology for implementing security policies, network segmentation, and encryption over wide-area networks (WANs). Platform consists of a cloud-hosted management portal (Airwall Conductor), cloud-hosted routing service (Airwall Relay), and hardware and software gateways (Airwall Gateways).	• Data exchange between Sewer Utility WWTPs • Remote access to Sewer Utility OT network for Sewer Utility staff • Remote access to Sewer Utility OT network for contractors
Verizon Wireless	Private network service, zero-tunnel configuration	4G Long-Term Evolution (LTE) cellular plan for machine-to-machine (M2M) applications. Communication restricted to customer mobile devices.	Remote pump station telemetry
Cradlepoint	IBR600C series cellular router	4G LTE cellular router	Remote pump station telemetry
VMWare	ESXi	Type 1 hypervisor for hosting virtual machines (VMs)	Central Kitsap Treatment Plant (CKTP) primary and secondary SCADA servers

2.2 Industrial Control System Hardware

Previously selected industrial control system (ICS) hardware technology is summarized in Table 2-2.

Table 2-2. Summary of previously selected ICS hardware technology

Manufacturer/ vendor	Product/model	Description	Application
Allen-Bradley	MicroLogix 1400	Compact controller with onboard I/O points, Ethernet port, and EtherNet/Internet Protocol (IP) and Distributed Network Protocol 3 (DNP3) communication capability	Remote pump station remote telemetry unit (RTU) controller

2.3 Industrial Control System Software

Previously selected ICS software technology is summarized in Table 2-3.

Table 2-3. Summary of previously selected ICS software technology

Manufacturer/ vendor	Product/model	Description	Application
AVEVA	System Platform 2020[a]	SCADA software platform for centralized management of SCADA human-machine interface (HMI) graphics and historical SCADA data. Includes communication drivers for integrating PLCs, network devices, and other ICS components. Also includes the individual AVEVA software components listed below.	• WWTP and remote pump station SCADA HMI screens • Redundant installation on servers residing at CKTP
AVEVA	InTouch HMI 2020[a]	Runtime and development software for SCADA HMI graphics.	• WWTP and remote pump station SCADA HMI screens • Runtime installations installed at WWTP operator SCADA personal computers (PCs) and workstations
AVEVA	Historian 2020[a]	SCADA data repository and management platform.	WWTP and remote pump station SCADA data
AVEVA	Historian Client 2020[a]	User interface for simplifying access to historical SCADA data and developing static and ad hoc trends.	• WWTP and remote pump station SCADA data • Installed at WWTP operator SCADA PCs and workstations
Rockwell Automation	Studio 5000 Logix Designer	PLC programming development environment	WWTP and remote pump station PLCs

a. Quality Controls Corporation (QCC) plans to update its ongoing System Platform 2017 implementation work for the Sewer Utility to System Platform 2020, the most current software offering.

2.4 Other Software Packages

Previously selected additional software packages are summarized in Table 2-4.

Table 2-4. Summary of previously selected additional software packages

Manufacturer/ vendor	Product/model	Description	Application
LLumin	LLumin	Computerized maintenance management system (CMMS)	Sewer Utility asset tracking and maintenance management
Hach	Water Information Management Solution (WIMS)	Laboratory information management system (LIMS)	• CKTP laboratory management • WWTP laboratory and SCADA data tracking and analysis

This page intentionally left blank.

3 OT Network Architecture Technology and Software

This section describes the network architecture technology components and software to support the SCADA-related assets. The section also provides a summary of the features of each of these components and software products as related to the Sewer Utility's system. The costing provided in this section is current as of the time of writing but may vary greatly depending on continuing supply chain issues.

3.1 Network Equipment Evaluation

In TM-2, Section 5.1.1, several requirements were identified for the Sewer Utility's OT network. These OT network requirements include the following:

- Secure and reliable connection between CKTP and the remote pump stations and WWTPs
- Remote access for instrumentation and controls (I&C) technicians via County-issued laptops
- Secure access to ICS data from business local-area network (LAN)

Several vendors of the industrial grade network equipment can meet the technical requirements. The following key attributes were considered for the selection of the Sewer Utility OT network equipment.

When selecting the modern OT network architecture technology components, the ability to integrate with the Sewer Utility's PLC hardware and software, relative costs, and minimal technical requirements are considered.

3.2 Managed Network Switches

Network equipment should be managed as a system and will ideally be consistent across manufacturer, product line, and vintage. Intermingling of network manufacturers, product lines, and vintages should be minimized. Network life cycle should be considered as part of facility planning.

Industrial-rated, panel-mounted switches like Allen-Bradley Stratix switches (Figure 3-1) should be used for control and I/O networks. Rack-mounted switches like the Cisco Catalyst 9000 switching family (Figure 3-2) should be used for SCADA and demilitarized zone (DMZ) networks.

3.2.1 Industrial Panel-Mounted Network Switches

Industrial panel-mounted network switches should support the following design features and protocols:

A. Support Ethernet 10/100/1000 megabits per second (Mbps)

B. Backbone (trunk) fiber ports shall be via small form-factor pluggable (SFP) modules

C. Provide as required (plus at least two spare) 10/100/1000 MBit/s port (twisted pair) at each Ethernet switch

D. Support Device Level Ring (DLR) topology

E. Support EtherNet/IP (Common Industrial Protocol [CIP]) protocol

F. Support Simple Network Management Protocol (SNMP) v3 and web-based management

G. Rapid Spanning Tree Protocol

H. Internet Group Management Protocol (IGMP) support for Internet Protocol (IP) multicast filtering to enable switches to automatically route messages only to appropriate ports

I. Check all received data for validity

    1. Discard invalid and defective frames or fragments

J. Monitor connected TP/TX line segments for short-circuit or interrupt using regular link test pulses in accordance with Institute of Electrical and Electronics Engineers (IEEE) 802.3

K. Monitor attached fiber-optic lines for open circuit conditions in accordance with IEEE 802.3

L. Dual redundant power supplies

M. Light-emitting diode (LED) status lights to indicate:

    1. Power: Supply voltage present

    2. Fault

    3. Port status

N. Environmental rating:

    1. Operating temperature: -40 degrees Fahrenheit (°F) to 140°F

    2. Humidity: 95 percent relative humidity, non-condensing

Figure 3-1. Allen-Bradley Stratix switch

Source: Rockwell Automation 2021b.

3.2.2 Cost

The costing for Allen-Bradley Stratix switches varies based on features such as the number of ports, managed or unmanaged, DLR connectivity, etc. Retail pricing for a few common Stratix switches that are typically used in PLC panels is shown in Table 3-1 for reference. Although unmanaged options are available for industrial panel-mounted switches they are not recommended. Each switch will need to be sized individually based on the network requirements for that panel.

Table 3-1. Allen-Bradley Stratix switches

Component	Component cost[a]
1783-BMS10CGN Stratix 5700 10-port managed switch	$3,032
1783-BMS06SA Stratix 5700 6-port managed switch	$1,352
1783-US5T Stratix 2000 unmanaged switch	$155

a. Retail cost information obtained from North Coast Electric website (North Coast Electric 2021a–c).

3.2.3 Rack-Mounted Switches (with Redundant Network Access)

Rack-mounted network switches should support the following design features and protocols:

A. Support Ethernet 10/100/1000 Mbps

B. Ethernet backbone uplink modules for connection to multimode and/or single-mode fiber via type LC connectors

C. Backbone (trunk) fiber ports shall be via SFP modules

D. Provide as required (plus at least two spare) 10/100/1000 MBit/s port (twisted pair) at each Ethernet switch

E. Support SNMP v3 and web-based management

F. Rapid Spanning Tree Protocol

G. IGMP support for IP multicast filtering to enable switches to automatically route messages only to appropriate ports

O. Check all received data for validity

   1. Discard invalid and defective frames or fragments

P. Monitor connected TP/TX line segments for short-circuit or interrupt using regular link test pulses in accordance with IEEE 802.3

H. Monitor attached fiber-optic lines for open circuit conditions in accordance with IEEE 802.3

I. Distance vector protocols:

   1. Routing Information Protocol (RIP)

   2. Border Gateway Protocol

   3. Rapid Spanning Tree Protocol

J. Link state protocols:

   1. Open Shortest Path First (OSPF)

K. Redundancy protocols:

   1. Hot Standby Router Protocol (HSRP)

L. Layer-3 LAN Base: support for static IP routing; support for Switched Virtual Interface (SVI)

M. Layer-3 IP base: RIP, EIGRP stub, OSPF for routed access, Policy-Based Routing (PBR), IPv4 and IPv6 EIGRP stub routing, IPv6 Unicast Reverse Path forwarding (uRPF), IPV6 PBR, Virtual Router Redundancy Protocol (VRRPv3), Policy Classification Engine, HSRP v6

N. Layer-3 IP services: OSPF, EIGRP, Border Gateway Protocol (BGP), Intermediate System to Intermediate System (IS-IS), Virtual Routing and Forwarding (VRF-lite)

O. Software support for IPv4 and IPv6 routing, multicast routing, modular quality of service (QoS), flexible netflow (FNF) and enhanced security features

P. Dual redundant power supplies

Q. LED status lights to indicate

4. Power: supply voltage present

5. Fault

6. Port status

R. Environmental rating:

3. Operating temperature: 32°F to 122°F

4. Humidity: 95 percent relative humidity, non-condensing

Figure 3-2. Cisco Catalyst 9000 family switch

Source: Cisco Systems 2021.

3.2.4 Cost

Like the Industrial panel-mounted switches, the costing for the Cisco Catalyst 9000 series varies based on features such as the number of ports, stackability, etc. Retail pricing for a few common Catalyst 9000 switches is shown in Table 3-2 for reference. Each switch will need to be sized individually based on the OT network requirements for that particular switch.

Table 3-2. Cisco Catalyst 9000 switches

Component	Component cost[a]
C9200-24P-E 24-port managed switch	$1,416
C9300-48P-A 48-port managed switch	$5,910

a. Retail cost information obtained from CDW 2021a–b.

3.3 Uninterrupted Power Supplies

Uninterrupted Power Supplies (UPS) should be used during a loss of power as a backup power source so that operators can be notified of a power loss and the SCADA system can temporarily maintain monitoring and control functions. The UPS can also help protect against potential damage to your equipment during power surges and spikes.

A tower style UPS like the APC SRT1500XLA should be used within the control panel. A rackmount UPS like APC SRT1500RMXLA-NC and additional rackmount external

batteries like APC SRT48RMBP should be used inside the network rack to provide backup power for approximately 4 hours.

3.3.1 Control Panel Uninterrupted Power Supply

Uninterrupted power supplies should support the following design features:

A. Double Conversion, true online type

B. Tower type format

C. Waveform: Pure sine wave

D. Power factor correction

E. Provide enough time to notify operator of in pending power loss when UPS is exhausted

F. Frequency range: 45-65 HZ

G. Input protection: Fuse or Circuit Breaker

H. Output voltage regulation: ±1% online and ±2% on battery mode.

I. Battery: Sealed, lead-acid; maintenance free.

J. Three stage battery charging for prolonged battery life.

K. Battery over discharge protection.

L. Input power cord.

M. Output receptacles.

N. Efficiency:

   1. Normal mode, minimum: 89%.

   2. Efficiency mode, minimum: 95%.

   3. Battery mode, minimum: 83%.

O. Operating temperature: 32 to 104 DEGF.

P. Relative humidity: 5-95% non-condensing.

Q. Integral bypass to automatically bypass UPS on selected fault conditions.

R. Front panel indication of UPS status and alarm conditions.

   1. UPS Fault.

   2. UPS on battery.

   3. UPS is online and operating normally.

4. Battery low.
5. UPS in bypass.

S. Utilize network management card to enable remote annunciation of the following conditions.

1. UPS Fault.
2. UPS on battery.
3. UPS is online and operating normally.
4. Battery low.
5. UPS in Bypass

T. Agency Approvals:

1. Safety: UL 1778.
2. Emissions: FCC Part 15 (Class A).

Figure 3-3. APC Smart-UPS SRT 1500 Tower

Source: APC

3.3.2 Cost

The costs for both the UPS as well as the network management card to provide remote monitoring and control of the UPS are shown below in Table 3-3 for reference.

Table 3-3. APC Smart-UPS SRT 1500, UPS Network Management Card

Component	Component cost[a]
APC Smart-UPS SRT 1500VA, 120V, LCD, tower, 6x NEMA 5-15R outlets	$1,450
UPS Network Management Card 3 with Environmental Monitoring	$539

a. Retail cost information obtained from APC website (APC 2021a-b).

3.3.3 Rackmount Uninterrupted Power Supply

Uninterrupted power supplies should have the following design features:

A. Double Conversion, true online type

B. Network Rackmount type format

C. Waveform: Pure sine wave

D. Power factor correction

E. Minimum 4 hours power ride through of 100% of connected load without incoming power.

   1. Provide extended battery or batteries as necessary to achieve the specified battery run time.

F. Frequency range: 45-65 HZ

G. Input protection: Fuse or Circuit Breaker

H. Output voltage regulation: ±1% online and ±2% on battery mode.

I. Battery: Sealed, lead-acid; maintenance free.

J. Three stage battery charging for prolonged battery life.

K. Battery over discharge protection.

L. Input power cord.

M. Output receptacles.

N. Efficiency:

   1. Normal mode, minimum: 89%.

   2. Efficiency mode, minimum: 95%.

   3. Battery mode, minimum: 83%.

O. Operating temperature: 32 to 104 DEGF.

P. Relative humidity: 5-95% non-condensing.

Q. Integral bypass to automatically bypass UPS on selected fault conditions.

R. Front panel indication of UPS status and alarm conditions.

1. UPS Fault.
2. UPS on battery.
3. UPS is online and operating normally.
4. Battery low.
5. UPS in bypass.

S. Utilize network management card to enable remote annunciation of the following conditions.

1. UPS Fault.
2. UPS on battery.
3. UPS is online and operating normally.
4. Battery low.
5. UPS in Bypass

T. Agency Approvals:

1. Safety: UL 1778.
2. Emissions: FCC Part 15 (Class A).

Figure 3-4. APC Smart-UPS SRT 1500 Rackmount

Source: APC

Figure 3-5. APC Smart-UPS SRT Battery Pack

Source: APC

3.3.4 Cost

Unlike the tower UPS, the rackmount UPS is bundled with a network management card. Additional Battery Packs may be required to achieve necessary backup time. The battery packs are stackable up to 10 units to provide the necessary backup time. Retail prices for the UPS and the battery pack are shown in Table 3-4 below.

Table 3-4. APC Smart-UPS SRT 1500 Rackmount, APC Smart-UPS SRT Battery Pack

Component	Component cost[a]
APC Smart-UPS SRT 1500VA, 120V, LCD, rackmount, 2U, 6x NEMA 5-15R outlets, w/network card	$1,975
APC Smart-UPS SRT Battery Pack (1kVA & 1.5kVA) 48V, 594VAh, rackmount, 2U	$839

b. Retail cost information obtained from APC website (APC 2021c-d).

3.4 OT Cybersecurity and Disaster Recovery

This section describes OT cybersecurity and disaster recovery for the Sewer District, including OT access control, OT network monitoring and logging software, and cost.

3.4.1 OT Access Control

To manage users on the OT network, consider implementing Microsoft Active Directory Domain Server (AD DS). AD authenticates and authorizes all users and computers in the domain network, assigns and enforces security polices for all computers, provides authentication and authorization mechanisms, and establishes a framework to deploy other related services.

3.4.2 OT Network Monitoring and Logging Software

OT network traffic events should be logged and stored on a centralized server that has enough memory to allow personnel to monitor and troubleshoot network issues. SolarWinds Network Performance Monitor and Kiwi Syslog Sever platform provide centrally managed syslog messages, real-time alerts, storage, and report generation.

Network monitoring software should provide the following features:

A. Network mapping tool and SNMP scanner

B. Network monitoring software with alerts

C. Network Packet Analyzer and Capture (PCAP) tool

D. Network path analysis and uptime monitor

E. Infrastructure monitoring

The network monitoring system (NMS) on the local OT network shall be used to monitor the operation of OT system network hosts. Network hosts shall be scanned only after confirming with the vendor that the device can be safely scanned. For example, Allen-Bradley PLC-5 or SLC PLCs are known to be sensitive to scanning.

3.4.3 Cost

Retail pricing for the SolarWinds Network Performance Monitoring and Syslog server logging is shown in Table 3-5 for reference. The SolarWinds NPM SL250 perpetual license provides management of up to 250 elements, which will meet the current and anticipated future needs of the Sewer Utility's OT network.

Table 3-5. Network monitoring and logging software

Component	Component cost[a]
SolarWinds NPM SL250 perpetual license	$7,279
SolarWinds Kiwi Syslog Server	$319

a. Retail cost information obtained from SolarWinds 2021a–b.

3.5 Multifactor Authentication for HMI Software

Because of increasing cybersecurity risks, a zero-trust security model should be used when accessing the control system equipment, particularly from a remote location outside of the OT network. One additional layer of security that should be considered is multifactor authentication. It is recommended that all mobile devices connecting to the control network equipment should be protected with a multifactor authentication application. There are several multifactor authentication applications including DUO, which has a partnership with Cisco network for more integrated zero-trust security solutions. Most multifactor authentication costing is done on a monthly subscription basis per user at a cost of approximately $6 to $10 per user per month based on the features used.

3.6 Version Control and Backup Software for OT Systems

This section describes version control and backup software for OT systems, including version control software and secure offline storage and cost for each.

3.6.1 Version Control Software

In a disaster response scenario, it is critical to have current configuration files for ICSs components (PLCs, operator panel, network switches, motor drives, etc.). Rockwell Software FactoryTalk (FT) Asset Centre provides a centralized tool for securing, managing, versioning, tracking, and reporting automation-related asset information across the entire Sewer Utility.

Rockwell Software FT AssetCentre is dedicated software for securing, managing, tracking, and documenting (versioning) the control system assets of the Sewer Utility.

FT AssetCentre will allow Sewer Utility staff to provide archive and disaster recovery for Allen-Bradley equipment, audit trails of programming changes, provide security on access to view and change production PLC code, and maintain controls assets along their useful life cycle. From a maintenance and troubleshooting standpoint FT AssetCentre has the capability to compare versions of Rockwell Software Studio5000 PLC code, which allows users to see programming changes quickly and easily between the two versions being compared. Also, FT AssetCentre can communicate directly with the Studio5000 Logix PLCs to retrieve scheduled backups and/or download the last known version to the processor itself, allowing all backups and version changes must be done automatically.

The graphic shown in Figure 3-6 shows the necessary requirements for the user permissions, network connections (and permissions), licensing, and version control. In the graphic the PLC represents all PLCs within the Sewer Utility's OT network and the user machine represents that field programming PCs. The FT AssetServer, FT Directory, and FT AssetCentre Agent are server PCs housed within the OT network.

Figure 3-6. Logical relationships of Rockwell software products required for FactoryTalk AssetCentre

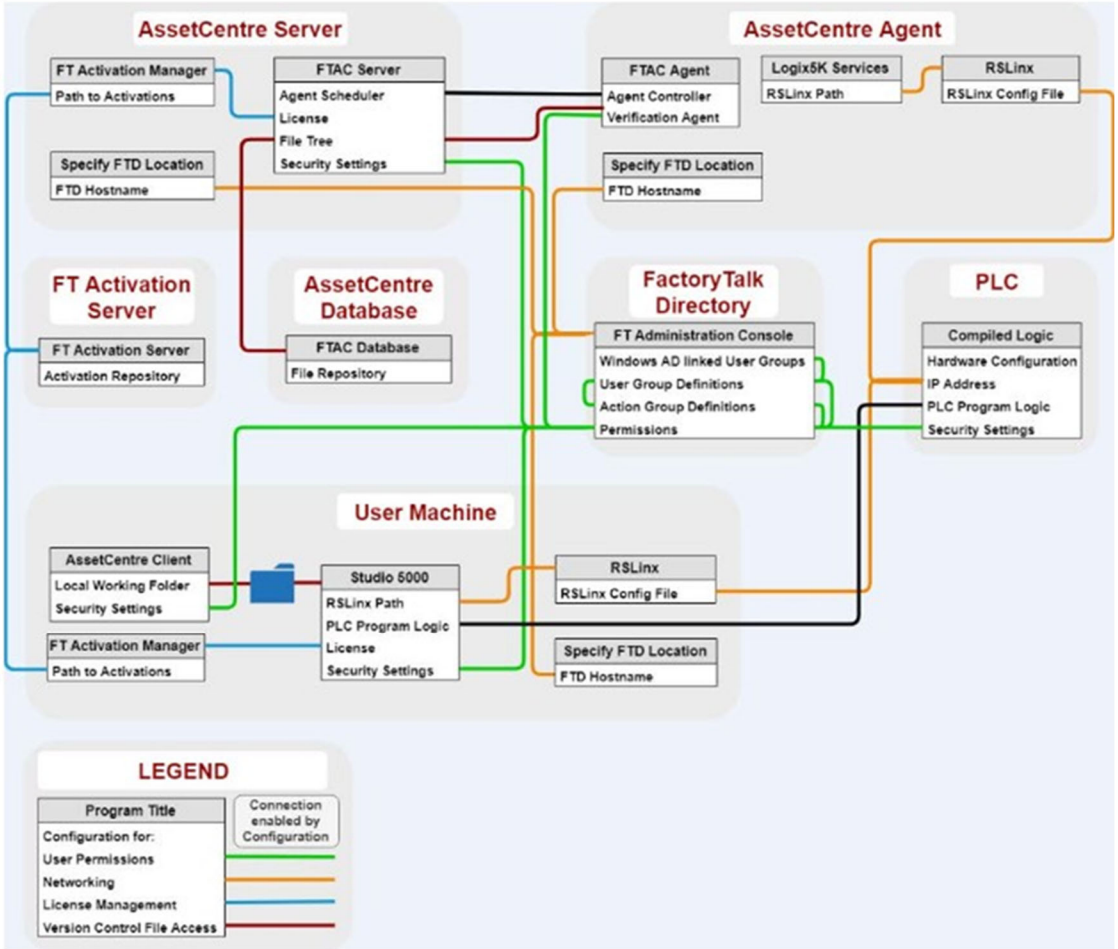

Source: Rockwell Automation 2021c.

3.6.2 Version Control Software Cost

Retail pricing for Rockwell Software FT AssetCentre is shown in Table 3-6 for reference. Rockwell Software FT AssetCentre is available in two different formats: perpetual (ownership) and subscription. Perpetual licensing also has the option to pay a yearly support cost.

Table 3-6 highlights the costing associated with the two formats. Also, the Sewer Utility may elect to add the Archive Management of Change module, which would allow the formal approval (and documentation) of changes to be integrated within the FT AssetCentre software, rather than being done separately. Only one server and license is anticipated to be required for the Sewer Utility.

Table 3-6. Network monitoring and logging software

Component	Perpetual[a]	Subscription
FT AssetCentre one-time cost	$16,300/license	N/A
FT AssetCentre annual cost	$3,260/server/year	$6,600/server/year
Archive Management of Change module one-time cost	$6,000/license	N/A
Archive Management of Change module annual cost	$1,317/server/year	$2,439/server/year

a. Retail cost information obtained from Border States Electric 2021a–b.

3.6.3 Secure Offline Storage

In the event of a ransomware attack on the Sewer Utility control system, secure offline storage of Sewer Utility control system files (software licenses, configuration files, environmental compliance data, etc.) will be critical for the timely recovery of affected systems. The Sewer Utility should consider creating routine offline copies of ICS files. The Sewer Utility can either self-manage storage of physical media locally or use a company like Iron Mountain to store files at a secure off-site facility either in the cloud or with physical media.

3.6.4 Secure Offline Storage Cost

Table 3-7 shows the costing for offline storage via a tape drive and storage media for the backups. Alternatively, off-site storage via a service company like Iron Mountain requires a specific quote but is costed based on the number of virtual machines (VMs) being protected and gigabytes (GB) of data begin backed up. Payments for those services are generally done as a monthly or yearly service cost. An estimated yearly cost is shown in Table 3-8.

Table 3-7. LTO-7 tape drive and storage media

Component	Component cost[a]
HPE StoreEver LTO-7 Ultrium 15000 - tape drive - LTO Ultrium - SAS-2	$3,274
Quantum - LTO Ultrium 7 x 1 - 6 TB - storage media	$78

a. Retail cost information obtained from CDW 2021c–d.

Table 3-8. Off-site Storage Service

Component	Component cost[a]
Estimated yearly cost based on 5 VM and 10 GM/month of data	$896

a. Retail cost information obtained from Panoptics 2021.

This page intentionally left blank.

4 PLC Hardware and Software

This section describes the Allen-Bradley CompactLogix 5380 controller and Compact 5000 I/O platform components selected as the new Sewer Utility standard for WWTP and remote pump station PLC design and implementation. The section also provides a summary of the evaluation approach by which these PLC components were selected. The costing provided in this section is current as of the time of writing but may vary greatly depending on continuing supply chain issues.

4.1 Allen-Bradley CompactLogix 5380 Controller and Compact 5000 I/O Standard Components

The Allen-Bradley CompactLogix 5380 controller and Compact 5000 I/O platform comprise several component options and features that allow for flexibility in designing a PLC system that aligns with Sewer Utility preferences. The platform does not use a chassis and all modules are DIN-rail-mountable. This section documents the platform components that are recommended for the Sewer Utility to standardize on for future design and implementation projects. A summary table (Table 4-1) comprising the recommended platform components is provided in Section 4.1.6. An example of a PLC rack assembled from controller and I/O modules within this product line is provided in Figure 4-1.

Figure 4-1. Allen-Bradley CompactLogix 5380 controller with Compact 5000 I/O modules

Source: Rockwell Automation 2018a.

4.1.1 Controller

This section describes the controller module and recommended accessories of the Allen-Bradley CompactLogix 5380 PLC platform.

Controller Module

The Allen-Bradley CompactLogix 5380 controller family includes several controller modules that feature a range of capabilities in terms of user memory, local I/O module capacity, and supported EtherNet/IP connections. The retail cost for these controllers

currently ranges from roughly $1,300 to $16,000 depending on the capabilities of the controller (North Coast Electric 2021d). Selecting a controller that is right-sized for the application can result in component cost savings and is recommended over a one-size-fits-all approach to controller module selection. A 5069-L320ER controller is depicted in Figure 4-2. This controller, for example, has 2 megabytes (MB) of user memory and supports up to 16 local I/O modules and 40 EtherNet/IP connections.

Figure 4-2. Allen-Bradley 5069-L320ER CompactLogix 5380 controller

Source: North Coast Electric 2021e.

All controller modules in the Allen-Bradley 5380 CompactLogix platform include two built-in 1 Gbps Ethernet ports. These ports can be configured for linear or DLR topologies where the ports share one IP address, or the ports can be configured with unique IP addresses to support network segmentation approaches. All controllers have a built-in Universal Serial Bus (USB) port for local programming, configuration, firmware updates, and online edits. Controllers also support Secure Digital (SD) memory cards for storing non-volatile memory.

Note, the CompactLogix 5380 controllers with part numbers ending in ERM, ERMK, and ERP include integrated motion and other advanced features that are not used in typical wastewater applications. The Sewer Utility is unlikely to leverage the additional functionality provided by these controllers, so investment in these higher-cost components is not recommended.

Controller Accessories

The Allen-Bradley 5380 CompactLogix controllers can be provided with spring clamp or screw clamp terminals for power connections, which must be ordered separately from the controller module. Either terminal kit would be suitable, but Sewer Utility staff are likely already familiar with screw clamp terminals based on the Sewer Utility's existing ICS infrastructure. For this reason, the Allen-Bradley 5069-RTB64-SCREW power terminal kit is recommended.

An SD memory card is also recommended for non-volatile memory storage of application programming and data. A 2 GB SD memory card (part 1784-SD2) ships with each controller and should provide sufficient memory storage for most, if not all, Sewer Utility applications.

4.1.2 EtherNet/IP Adapter

This section describes the Allen-Bradley Compact 5000 I/O EtherNet/IP adapter recommended for the Sewer Utility.

EtherNet/IP Adapter

The Allen-Bradley Compact 5000 I/O platform includes two types of EtherNet/IP adapters that serve as communication modules for remote input/output (RIO) racks: the 5069-AENTR and 5069-AEN2TR. Both EtherNet/IP adapters facilitate high-speed data transfer between the connected Compact 5000 I/O modules within the RIO rack and one or more CompactLogix 5380 controllers (or other compatible controllers) on a shared EtherNet/IP network. Both EtherNet/IP adapters also include two built-in 1 Gbps Ethernet ports. These ports can be configured for linear or DLR topologies where the ports share one IP address, or a single port can be used to connect to a star network topology.

The most significant advantage that the 5069-AENTR has over the 5069-AEN2TR is some security features included in what Allen-Bradley refers to as Protected Mode. Among other things, these features are meant to reduce the attack surface of the device by preventing configuration changes, firmware updates, and remote resets from occurring once the adapter is exchanging I/O with a controller. While the 5069-AEN2TR does not support Protected Mode, the adapter has a four-character digital display that communicates status and fault messages, which can help with troubleshooting. The 5069-AEN2TR also supports SD memory cards for storing the adapter's configuration in non-volatile memory. The latter feature allows for the adapter to automatically revert to its last saved configuration on power-up, which allows the device to automatically recover from loss or corruption of internal memory. While both EtherNet/IP adapters have advantages, the enhanced troubleshooting and resilience features of the 5069-AEN2TR are likely to be more beneficial to the Sewer Utility. For this reason, HDR Engineering, Inc. (HDR) recommends that the Sewer Utility standardize on the 5069-AEN2TR for future RIO racks (Figure 4-3).

Figure 4-3. Allen-Bradley 5069-AEN2TR Compact 5000 I/O EtherNet/IP adapter

Source: North Coast Electric 2021f.

EtherNet/IP Adapter Accessories

The Allen-Bradley 5069-AEN2TR EtherNet/IP adapter can be provided with spring clamp or screw clamp terminals for power connections, which, like the controller module, must be ordered separately from the EtherNet/IP adapter module. The power terminal kits used for the controller module are identical for the 5069-AEN2TR. As discussed for the controller module, HDR recommends that the Sewer Utility standardize on the Allen-Bradley 5069-RTB64-SCREW power terminal kit.

An SD memory card is also recommended for non-volatile memory storage of adapter configuration. A 1 GB SD memory card, the smallest available from Allen-Bradley, should provide ample memory storage for the adapter configuration.

4.1.3 Power Supply Considerations

The CompactLogix 5380 controller and Compact 5000 I/O platform does not include power supply modules like previous generations of the CompactLogix product line. Instead, the system requires the use of external power supplies that are wired to the power terminals on the CompactLogix 5380 controller or Compact 5000 I/O EtherNet/IP adapter. Power is distributed from the controller/adapter to the connected Compact 5000 I/O modules via a module (MOD) power bus. Similarly, power is distributed from the controller/adapter to the instrumentation with I/O connections to the Compact 5000 I/O modules via a sensor/actuator (SA) power bus. Both of these power buses reside at the rear of the controller/adapter and I/O modules and are made continuous by the interconnection of the modules.

Rockwell Automation recommends providing separate external power supplies for the MOD and SA power buses. This approach prevents a scenario where both power buses are lost because of the failure of a single component. The MOD power bus must be supplied with 24 volts direct current (VDC) power. While the SA power bus may be

powered via 24 VDC or 120 volts alternating current (VAC), HDR recommends that the Sewer Utility standardize on 24 VDC for the SA power bus. According to National Fire Protection Association (NFPA) 70E: Standard for Electrical Safety in the Workplace, all voltages 50 volts (V) and greater are considered to present a shock hazard under most circumstances (NFPA 2021). In general, standardizing on the use of 24 VDC controls and power distribution, to the extent possible, within industrial control panels and for field instrumentation can reduce or eliminate shock hazards for personnel.

4.1.4 I/O Modules

This section describes the Allen-Bradley Compact 5000 I/O modules recommended for the Sewer Utility. To reduce shock hazards within industrial control panels and at field instrumentation, HDR recommends that the Sewer Utility standardize on 24 VDC control voltage for all I/O modules on future projects, when feasible. The I/O modules recommended in this section have been selected to conform with this 24 VDC control voltage standard.

Analog Input Module

HDR recommends that the Sewer Utility standardize on the Allen-Bradley 5069-IF8 module for analog inputs (Figure 4-4). This module supports current- and voltage-based two- and four-wire analog devices. A combination of these device types may be wired to the same module. Each module has eight available channels wired as differential inputs.

Figure 4-4. Allen-Bradley 5069-IF8 Compact 5000 I/O analog input module

Source: North Coast Electric 2021g.

Note, the Compact 5000 I/O platform also includes four-channel analog input modules that support thermocouple and resistance temperature detectors (RTDs) in addition to the two- and four-wire devices supported by the 5069-IF8 analog input module. However, unless thermocouples or RTDs are to be wired to the analog input module, the Sewer Utility would gain no benefit from using a module with fewer available channels.

Analog Output Module

HDR recommends that the Sewer Utility standardize on the Allen-Bradley 5069-OF8 module for analog outputs (Figure 4-5). This module supports current- or voltage-based analog outputs. Each module has eight available channels wired as differential outputs.

Figure 4-5. Allen-Bradley 5069-OF8 Compact 5000 I/O analog output module

Source: North Coast Electric 2021h.

Digital Input Module

HDR recommends that the Sewer Utility standardize on the Allen-Bradley 5069-IB16F module for digital inputs (Figure 4-6). This module has 16 available channels wired as sinking 24 VDC inputs.

Figure 4-6. Allen-Bradley 5069-IB16F Compact 5000 I/O digital input module

Source: North Coast Electric 2021i.

The 5069-IB16F is the high-speed variant of the 16-channel 24 VDC digital input modules available within the Compact 5000 I/O platform, which allows for connection of higher-speed frequency inputs for counter applications. A common application of counter applications in wastewater is for flow totalization where magmeter frequency outputs are monitored to determine total flows. Given that the high-speed variant of the digital input module retails for roughly $30 more than the standard digital input module, there is not likely to be considerable cost savings from only using the high-speed module for counter applications. Standardizing on two digital input module types would also require additional spare parts to be managed. For these reasons, HDR recommends that the Sewer Utility standardize on the 5069-IB16F for all digital input applications.

Digital Output Module

HDR recommends that the Sewer Utility standardize on the Allen-Bradley 5069-OB16 module for digital outputs (Figure 4-7). This module has 16 available channels wired as sourcing 24 VDC outputs.

Figure 4-7. Allen-Bradley 5069-OB16 Compact 5000 I/O digital output module

Source: North Coast Electric 2021j.

Unlike the previously discussed I/O modules, the 5069-OB16 module does not draw current from the SA power bus. Instead, wiring to an external power supply is required for the module, which allows for the digital output circuits to be isolated from the SA power bus used by other I/O modules.

I/O Module Accessories

The Allen-Bradley analog and digital I/O modules can be provided with spring clamp or screw clamp terminals for I/O connections. These terminal kits must be ordered separately from the modules. As discussed for the controller module, HDR recommends that the Sewer Utility standardize on the screw terminal kit variant, the Allen-Bradley 5069-RTB18-SCREW terminal kit.

4.1.5 End Cap

All CompactLogix 5380 controller and Compact 5000 I/O racks require installation of a 5069-ECR end cap on the right side of the rightmost module in the rack (see Figure 4-8). The end cap covers the exposed interconnections like the MOD and SA power buses on the rightmost module within the rack. Failure to install the end cap can result in equipment damage and risk of electric shock.

Figure 4-8. Allen-Bradley 5069-ECR CompactLogix 5380 and Compact 5000 I/O end cap

Source: EESCO 2021.

4.1.6 Recommended Standard Component Summary Table

The Allen-Bradley CompactLogix 5380 controller and Compact 5000 I/O platform components recommended for the Sewer Utility standard PLC and RIO components are summarized in Table 4-1.

Table 4-1. Allen-Bradley CompactLogix 5380 controller and Compact 5000 I/O platform standard components summary

Part number	Type	Description
5069-L3xxER	Controller	CompactLogix 5380 controller: sized per application
5069-RTB64-SCREW	Controller and EtherNet/IP adapter accessories	Screw clamp power terminal kit
1784-SD2	Controller accessories	SD memory card for application and data storage: 2 GB
5069-AEN2TR	EtherNet/IP adapter	Compact 5000 I/O EtherNet/IP adapter for RIO racks
1785-SD1	EtherNet/IP adapter accessories	SD memory card for configuration storage: 1 GB
5069-IF8	Analog input module	Analog input module: 8-channel, differential
5069-OF8	Analog output module	Analog output module: 8-channel, differential
5069-IB16F	Digital input module	Digital input module: 16-channel, high-speed, sinking
5069-OB16	Digital output module	Digital output module: 16-channel, sourcing
5069-RTB18-SCREW	I/O module accessories	Screw clamp terminal kit: 18-pin
5069-ECR	End cap	End cap: required on rightmost module in rack

4.2 PLC Programming Software

The Allen-Bradley CompactLogix 5380 controllers are configured and programmed with Rockwell Automation's Studio 5000 Logix Designer Application. This is the same software used to program the Sewer Utility's existing CompactLogix controllers from previous generations of the product line and HDR believes that the Sewer Utility already owns a license for the software. The CompactLogix 5380 controllers have minimum Logix Designer version requirements, which ranges from Version 28.00.00 to Version 29.00.00 for the controllers most suitable to the Sewer Utility's applications (Rockwell Automation 2020).

4.3 PLC Platform Evaluation

In TM-2, Section 6.1.1, several requirements were identified for the Sewer Utility's next PLC platform standard. These PLC platform requirements include the following:

- Support integration of an increasing number of Ethernet devices
- Compatible with existing PLC programming logic
- Actively supported by the manufacturer for the next 10 to 15 years
- Manufactured by Allen-Bradley to preserve the Sewer Utility's existing investment in standardizing on Allen-Bradley PLCs

Of the PLC platforms currently offered by Allen-Bradley, several controllers would meet the technical requirements. However, only two controller families are likely to satisfy the long-term active support requirements: ControlLogix 5580 and CompactLogix 5380. These controllers are compared in subsequent paragraphs.

Note, Allen-Bradley also offers a relatively new CompactLogix 5480 line of controllers that runs an instance of Windows 10 Internet of Things (IoT) Enterprise "in parallel" with the Logix control engine (Rockwell Automation 2021a). The intent of this offering is to allow advanced data processing and analytics to be shifted down from central servers to the device level. However, HDR has several concerns regarding the stability of the Windows 10 operating system, its fluctuating demands on device resources, and the high number of vulnerabilities that require frequent patches and updates from Microsoft. Long-term support of the Windows 10 operating system is also dubious, given that the extended support window for Windows 10 is currently slated to end on October 14, 2025 (Microsoft 2021). For these reasons, the CompactLogix 5480 product line was not considered as a viable candidate for the next Sewer Utility PLC platform standard.

4.3.1 Ease of Migration

Both the ControlLogix 5580 and CompactLogix 5380 controllers are made by the same manufacturer as the Sewer Utility's existing PLCs and share the same native industrial Ethernet communications protocol (EtherNet/IP) and programming environment as the existing CompactLogix PLCs. When it comes to the future migration of existing CompactLogix controllers, either platform would allow for relatively simple migration of existing programming logic and preservation of existing SCADA communication driver configuration.

The existing Allen-Bradley SLC 5/05 and MicroLogix 1500 PLCs that are recommended for near-term replacement are programmed via Rockwell Automation's RSLogix 500 software, which is a different programming environment from the Studio 5000 Logix Designer Application software used to program both the ControlLogix 5580 and CompactLogix 5380 controllers. The SLC 5/05 PLCs also use a different communication driver to establish data exchange with the Sewer Utility's AVEVA SCADA software. Because both candidate controllers share a common programming environment and require the same EtherNet/IP-based communication driver, neither controller has a distinct advantage when it comes to migrating the existing programming logic to the new platform and would both require transitioning to the communication driver currently used by the Sewer Utility's existing CompactLogix PLCs.

One significant benefit that the CompactLogix 5380 and Compact 5000 I/O platform has over the ControlLogix 5580 platform in terms of ease of migration is its form factor. The footprint of the CompactLogix 5380 and Compact 5000 I/O platform components is considerably smaller, which could reduce the amount of control panel modifications required for replacement of existing PLCs within existing enclosures. When it comes to SLC 5/05 PLC rack replacement, the CompactLogix 5380 and Compact 5000 I/O components could fit within the SLC 5/05 footprint with room to spare, assuming a one-for-one component replacement. The chassis required by the ControlLogix product line have a roughly identical footprint to those required by the SLC 500 product line. The difference in form factor will be more pronounced when it comes to replacement of the MicroLogix 1500 PLCs, which have a smaller footprint than either candidate platform. For these remote pump station control panel applications, the smaller footprint of the CompactLogix 5380 and Compact 5000 I/O components presents a significant advantage.

4.3.2 Capability

When determining modern controller requirements, programming application memory size (in megabytes) and maximum number of IP nodes supported are two significant metrics that are commonly considered. The former represents the available memory for the programming file and the data being handled, while the latter, in general terms, indicates how many IP devices the controller can communicate with. Table 4-2 includes a comparison of these metrics for the two Allen-Bradley controller families considered for the Sewer Utility. To provide some context for the comparison, the table also provides the actual memory used by the existing CKTP ultraviolet (UV) system PLC, which appears to have the largest memory usage of all PLCs in the Sewer Utility's inventory. For additional context, the table also includes an estimate of the maximum number of IP nodes that will need to communicate with any one PLC in the future Sewer Utility SCADA system. This estimate is based on the solids processing building (SPB) PLC (PLC 7105) and a scenario where the existing SPB motor control centers (MCCs) are upgraded with EtherNet/IP motor controllers and CKTP expansion adds loads to these MCCs. An allowance for 10 new Ethernet-capable instruments is also included in this estimation.

Table 4-2. Allen-Bradley CompactLogix 5380 and ControlLogix 5580 controller comparison

Controller family	Application memory size (MB)[a]	Max IP nodes supported[a]
CompactLogix 5380 standard controller	0.6–10.0	16–180
ControlLogix 5580 standard controller	3–40	100–300
Existing CKTP UV SCC 3100 controller memory used	~1.54	----
Estimated maximum IP nodes communicating to one controller in future Sewer Utility SCADA system	----	~75

a. Metrics obtained from Rockwell Automation literature (Rockwell Automation 2018b and Rockwell Automation 2019).

While PLC memory usage will increase somewhat as the Sewer Utility acquires more data from Ethernet-capable devices in the future, it is not anticipated that the Sewer Utility will have applications that exceed the upper limit on the ControlLogix 5380 memory size range in the next 10 to 15 years. Nor is it anticipated that a single PLC within the Sewer Utility SCADA system will need to communicate with more IP nodes than the CompactLogix 5380 controllers can support within that time frame. Based on memory size and the number of IP nodes supported, the CompactLogix 5380 presents a more right-sized option for the Sewer Utility's needs.

Another consideration for modern controllers is Ethernet communication speed capabilities. Both the CompactLogix 5380 and ControlLogix 5580 controllers are capable of 1 Gbps Ethernet communications. ICSs are gradually migrating from 100 Mbps port speeds to support higher data communication rates at the controller and device level, and 1 Gbps is quickly becoming the new standard. Having controllers that support higher port speeds will allow the Sewer Utility to benefit from other proposed improvements to the Sewer Utility SCADA system network infrastructure and increase the likelihood that the controllers remain compatible with equipment that may be installed in the future.

One of the major advantages that the ControlLogix 5580 controllers have over the CompactLogix 5380 controllers is their support for controller redundancy. However, as identified in TM-2, controller redundancy is not a requirement for the Sewer Utility. While the ControlLogix 5580 controllers have some additional technical functionality and features, like hot-swappable I/O modules, these are not critical features that would present sufficient drivers to select an oversized controller on their merits alone.

4.3.3 Cost

In terms of cost, the CompactLogix 5380 controller and associated Compact 5000 I/O components are the clear choice over the ControlLogix product line. Retail pricing for components required for a single, hypothetical seven-slot PLC rack with similar I/O capabilities is provided in Table 4-3 for reference. Note, because of the difference in I/O module costs, the cost delta will become more pronounced as the number of I/O modules in the racks increases.

Table 4-3. Allen-Bradley CompactLogix 5380 and ControlLogix 5580 component cost comparison

Component	CompactLogix 5380/ Compact 5000 I/O component cost[a]	ControlLogix 5580/ ControlLogix I/O component cost[a]
7-slot chassis	Not required	$632
Rack power supply module (24 VDC)	Not required	$1,137
Controller module, 3 MB, support for at least 60 IP nodes	$5,586	$6,404
Analog input module, 8-channel	$867	$1,327
Analog output module, 8-channel	$1,520	$2,494
Digital input module, 16-channel, high-speed	$292	$616
Digital output module, 16-channel	$340	$689
Slot filler (quantity of 2)	Not required	$70
I/O module terminal blocks (quantity of 4)	$248	$384
Controller module terminal blocks	$34	Not required
End cap	$25	Not required
Total	**$8,912**	**$13,753**

a. Retail cost information obtained from North Coast Electric website (North Coast Electric 2021d).

This page intentionally left blank

5 References

APC

2021a APC Smart-UPS SRT 1500VA, 120V, LCD, tower, 6x NEMA 5-15R outlets. https://www.apc.com/shop/us/en/products/APC-Smart-UPS-SRT-1500VA-120V-LCD-rackmount-w-kit-6x-NEMA-5-15R-outlets/P-SRT1500XLA. Viewed on December 1, 2021.

2021b UPS Network Management Card 3 with Environmental Monitoring. https://www.apc.com/shop/us/en/products/UPS-Network-Management-Card-3-with-Environmental-Monitoring/P-AP9641?Chat_CSC_ID=a50002. Viewed on December 1, 2021.

2021c APC Smart-UPS SRT 1500VA, 120V, LCD, rackmount, 2U, 6x NEMA 5-15R outlets, w/network card. https://www.apc.com/shop/us/en/products/APC-Smart-UPS-SRT-1500VA-120V-LCD-rackmount-2U-6x-NEMA-5-15R-outlets-w-network-card/P-SRT1500RMXLA-NC?Chat_CSC_ID=a50002. Viewed on December 1, 2021.

2021d APC Smart-UPS SRT Battery Pack (1kVA & 1.5kVA) 48V, 594VAh, rackmount, 2U. https://www.apc.com/shop/us/en/products/APC-Smart-UPS-SRT-Battery-Pack-1kVA-1-5kVA-48V-594VAh-rackmount-2U/P-SRT48RMBP?Chat_CSC_ID=a50002. Viewed on December 1, 2021.

Border States Electric

2021a FactoryTalk AssetCentre Perpetual and Subscription Costing. Obtained on August 27, 2021.

2021b FactoryTalk AssetCentre Archive Management of Change Module Perpetual and Subscription Costing. Obtained on August 27, 2021.

CDW

2021a Cisco Catalyst 9200 - Network Essentials - switch - 24 ports - smart - rack. https://www.cdw.com/product/cisco-catalyst-9200-network-essentials-switch-24-ports-smart-rack/5638586?pfm=srh. Viewed on August 14, 2021.

2021b Cisco Catalyst 9300 - Network Advantage - switch - 48 ports - managed – rack. https://www.cdw.com/product/cisco-catalyst-9300-network-advantage-switch-48-ports-managed-rac/4696725?pfm=srh. Viewed on August 14, 2021.

2021c HPE StoreEver LTO-7 Ultrium 15000 - tape drive - LTO Ultrium - SAS-2. https://www.cdw.com/product/hpe-storeever-lto-7-ultrium-15000-tape-drive-lto-ultrium-sas-2/4510331?pfm=srh. Viewed on September 8, 2021.

2021d Quantum - LTO Ultrium 7 x 1 - 6 TB - storage media. https://www.cdw.com/product/quantum-lto-ultrium-7-x-1-6-tb-storage-media/3936476?pfm=srh. Viewed on September 8, 2021.

Cisco Systems

2021 Cisco Catalyst 9000 Series. https://www.cisco.com/c/en/us/products/collateral/switches/catalyst-9000/nb-09-cat-9k-aag-cte-en.html. Viewed on September 5, 2021.

EESCO

2021 Allen-Bradley End Cap. https://buy.eescodist.com/Automation-and-Control/PLC-HMI-and-Logic-Devices/PLC-Components/PLC-End-Caps/ROCKWELL-AUTOMATION/End-

Cap-with-Adapter-Required-on-Right-Most-I-O-Module/5069-ECR/p/88950833414-1?dimId=1gn8j5m. Viewed on March 2, 2021.

Microsoft

2021 Microsoft Active Directory Server. https://docs.microsoft.com/en-us/troubleshoot/windows-server/identity/active-directory-overview. Viewed on September 3, 2021.

NFPA (National Fire Protection Association)

2021 NFPA 70E: Standard for Electrical Safety in the Workplace.

North Coast Electric

2021a Allen-Bradley 1783-BMS10CGN Stratix 5700 10-Port Managed Switch. https://www.northcoast.com/product/detail/911180/allen-bradley-rockwell-1783-bms10cgn. Viewed on September 8, 2021.

2021b Allen-Bradley 1783-BMS06SA Stratix 5700 6-Port Managed Switch. https://www.northcoast.com/product/detail/832979/allen-bradley-rockwell-1783-bms06sa. Viewed on September 8, 2021.

2021c Allen-Bradley 1783-US5T Stratix 2000 5-Port Unmanaged Switch. https://www.northcoast.com/product/detail/950131/allen-bradley-rockwell-1783-us5t. Viewed on September 8, 2021.

2021d Various component costs published online. https://www.northcoast.com. Viewed on March 1–2, 2021.

2021e *Allen-Bradley 5069-L320ER.* https://www.northcoast.com/product/detail/AB-CMX-5069-L320ER?s=1271268. Viewed on March 1, 2021.

2021f *Allen-Bradley 5069-AEN2TR.* https://www.northcoast.com/product/detail/AB-CMX-5069-AEN2TR?s=1271075. Viewed on March 2, 2021.

2021g *Allen-Bradley 5069-IF8.* https://www.northcoast.com/product/detail/AB-CMX-5069-IF8?s=1276577. Viewed on March 2, 2021.

2021h *Allen-Bradley 5069-OF8.* https://www.northcoast.com/product/detail/AB-CMX-5069-OF8?s=1276578. Viewed on March 2, 2021.

2021i *Allen-Bradley 5069-IB16F.* https://www.northcoast.com/product/detail/AB-CMX-5069-IB16F?s=1337024. Viewed on March 2, 2021.

2021j *Allen-Bradley 5069-OB16.* https://www.northcoast.com/product/detail/AB-CMX-5069-OB16?s=1271079. Viewed on March 2, 2021.

Panoptics

2021 Backup-as-a-Service. https://www.panoptics.com/services/datacenter-connectivity/backup-as-a-service/#section_5. Viewed on September 6, 2021.

Rockwell Automation

2018a *Migration Solutions: CompactLogix 1768-L4x Controller to CompactLogix 5380 Controller.* https://literature.rockwellautomation.com/idc/groups/literature/documents/pp/migrat-pp037_-en-e.pdf. November.

2018b *ControlLogix 5580 Controllers.* Publication 1756-PP001E-EN-P.

2019 *CompactLogix 5380 Controllers.* Publication 5069-PP003E-EN-P.

2020 *CompactLogix 5380 and Compact GuardLogix 5380 Controllers.* https://literature.rockwellautomation.com/idc/groups/literature/documents/um/5069-um001_-en-p.pdf. August.

2021a *CompactLogix 5480 Controllers.* https://www.rockwellautomation.com/en-us/products/hardware/allen-bradley/programmable-controllers/small-controllers/compactlogix-family/compactlogix-5480-controllers.html. Viewed on March 5, 2021.

2021b *Stratix 5400 Industrial Ethernet Switches.* https://www.rockwellautomation.com/en-us/products/hardware/allen-bradley/network-security-and-infrastructure/ethernet-networks/stratix-5400-industrial.html. Viewed on September 10, 2021.

2021c FactoryTalk AssetCentre Getting Results Guide. https://literature.rockwellautomation.com/idc/groups/literature/documents/gr/ftac-gr002_-en-e.pdf. Viewed on July 27, 2021.

SolarWinds Worldwide, LLC

2021a Network Performance Monitor. https://www.solarwinds.com/network-performance-monitor. Viewed on September 5, 2021.

2021b Kiwi Syslog Server. https://www.solarwinds.com/kiwi-syslog-server. Viewed on September 5, 2021.

Instrumentation and Control Preferences and Standards:

Table Error! No text of specified style in document.-1: Measurement Devices Standard Equipment

Measurement	Sensor Type	Preferred Manufacturer	Application
Flow	Venturi Tube	SIEMENS KROHNE	Large pipe flow measurements
	Magmeter	SIEMENS KROHNE	Chemical flow rates, sludge, dirty water
Level	Radar	ENDRESS & HAUSER	Basin level, sodium hypochlorite tank
	Ultrasonic	SIEMENS MILLSTRONICS	For level applications where Radar is not feasible.
	Pressure	ENDRESS & HAUSER EVOQUA	Chemical tanks, pressurized tanks
Pressure	Gauge Pressure	KROHNE	Process pipelines, pressure vessels
Differential Pressure	Differential Pressure	-	Venturi flow, loss of head, pressurized tanks
Temperature	RTD	-	Process temperature, ambient temperature
	Thermocouple	-	Motor and pump bearings
Vibration	Vibration	-	Large pump and motor monitoring
Weight	Strain gauge	-	Bulk chemical tanks, sludge hoppers
	Hydraulic	-	Bulk chemical tanks

Table-2: Online Process Devices Standard Equipment

Measurement	Sensor Type	Preferred Manufacturer	Application
Turbidity	Low turbidity	HACH	Filtered water, finished water
	High turbidity	HACH	Raw water
Chlorine residual	—	-	All process water

Table-3: Switches Standard Equipment

Measurement	Sensor Type	Preferred Manufacturer	Application
Flow	Thermal	-	Process lines, seal water, chemical flows
	Vane	-	Air duct ventilation
	Paddle	-	Emergency shower lines
Level	Electrode Probe	XYLEM MULTITRODE	Chemical day tanks
	Float	CONERY	Dirty water levels, sludge processes, potential areas for flooding (vaults, sumps, etc.)
	Float	-	Flood, adjacent to sumps
	Magnetic	-	Side mounted level gauges
Pressure	Pressure	-	Most process lines
Temperature	Capillary	-	Motor and pump bearings

Table-4: Alarm Indicators Standard Equipment

Measurement	Sensor Type	Preferred Manufacturer	Application
Beacon alarm	Strobe/rotating	-	Confined spaces
Panel alarm	Incandescent	-	Local control panels, usually vendor package systems

Table-5: Indicators Standard Equipment

Measurement	Sensor Type	Preferred Manufacturer	Application
Level	Magnetic Follower	-	Chemical tanks, pressure tanks for side mounted application
Flow	Rotating Wheel	-	Chemical flow lines, low flow rate applications
	Rotameter (fluid)	-	Seal water lines, analyzer sample lines, water lines
	Rotameter (air)	-	Bubbler panels, air supply lines
Pressure	Bourdon Gauges	-	Pump suction/discharge lines, pressurized process lines

Table-6: PLC Equipment Criteria

Component	Manufacturer/ Model No.	Minimum Standard/Criteria
Programmable Logic Controller	ALLEN BRADLEY – COMPACT LOGIX	Single processor per process area (no redundancy processor or power supply required). Split I/O for redundant equipment over separate I/O cards (grouping not specific).
Processor	1769-L33ER	Maintain current supply of spare components best suited by staying on 1769 model at this time
Digital Input (120 VAC)	1769	No minimum standard
Digital Output (Relay)	1769	No minimum standard
Analog Input	1769	Isolated 4-20 mA current loop, grounding of shield at PLC/RIO only, 24 V dc power sourced from PLC/RIO control panel unless instrument has integral power supply.
Analog Output	1769	Isolated 4-20 mA, 24 Vdc power sourced from PLC/RIO control panel
Communication	-	—
Programming Software	STUDIO 5000	—
Communications Software	ARCHESTRA	—

Note:
I/O = Inputs/Outputs; Vdc = volts of direct current

TM-5: Project Overview

Sewer Utility SCADA Master Plan

Kitsap County Public Works
Sewer Utility Division

July 12, 2022

This page intentionally left blank.

Kitsap County Public Works, Sewer Utility Division

Sewer Utility SCADA Master Plan

TM-5: Project Overview

July 12, 2022

Prepared by:

Brandon Erndt, PE

HDR Engineering, Inc.

(602) 522-7712

Christopher Maras, PE

HDR Engineering, Inc.

(402) 208-7051

and

Bruce Johnston, PE

HDR Engineering, Inc.

(425) 450-6217

I hereby certify that the technical memorandum was prepared under my direct supervision and that I am a duly registered Engineer under the laws of the State of Washington.

This page intentionally left blank.

.

Contents

1 Introduction 1-1

1.1 Approach 1-1

1.2 Technical Memorandum Organization 1-1

1.2.1 Structure 1-1

2 Improvement Projects Segmentation 2-1

2.1 Network Architecture 2-1

2.2 Hardware 2-1

2.3 Software 2-2

2.4 Documentation ..... 2-2~~2-3~~

2.5 Other Software Packages 2-3

3 Overall Schedule 3-1

3.1 Projects in Fiscal Year 2023 3-1

3.2 Projects in Fiscal Year 2024 3-1

3.3 Projects in Fiscal Year 2025 3-2

3.4 Projects in Fiscal Year 2026 3-2

3.5 Projects in Fiscal Year 2027 ..... 3-2~~3-3~~

3.6 Projects in Fiscal Year 2028 3-3

3.7 Projects in Fiscal Year 2029 3-3

4 Summary of Cost of Opinions 4-1

4.1 Cost Breakdown for Each Fiscal year 4-1

5 Improvement Projects ..... 5-3~~5-1~~

5.1 Network Architecture Projects ..... 5-4~~5-2~~

5.2 Hardware Projects ..... 5-15~~5-9~~

5.3 Software Projects ..... 5-36~~5-25~~

5.4 Documentation Projects ..... 5-40~~5-29~~

5.5 Other Software Package Projects ..... 5-44~~5-32~~

Tables

Table 2-1. Projects List: Network Architecture Projects 2-1

Table 2-2. Projects List: Hardware Projects 2-1

Table 2-3. Projects List: Software Projects 2-2

Table 2-4. Projects List: Documentation Projects 2-3

Table 2-5. Projects List: Other Software Package Projects 2-3

Table 3-1. Projects in FY2023 3-1

Table 3-2. Projects in FY2024 3-1

Table 3-3. Projects in FY2025 3-2

Table 3-4. Projects in FY2026 3-2

Table 3-5. Projects in FY2027 ..... 3-2~~3-3~~

Table 3-6. Projects in FY2028 3-3

Table 3-7. Projects in FY2029 3-3

Table 4-1. Cost Breakdown for each Fiscal Year 4-1

Table 5-1. Project List ..... 5-3~~5-1~~

Figures

Figure 4-1. CIP Budget Chart 4-1

Appendix

Appendix A – Cost Estimate

Appendix B – Schedule

Abbreviations

CIP	Common Industrial Protocol
CKTP	Central Kitsap Treatment Plant
CMMS	Computerized maintenance management system
DLR	Device Level Ring
DMZ	Demilitarized zone
DS	Domain Server
EIGRP	Enhanced Interior Gateway Routing Protocol
FNF	Flexible netflow
FT	FactoryTalk
GB	Gigabyte(s)
HDR	HDR Engineering, Inc.
HIP	Host Identity Protocol
HMI	Human-machine interface
HPHMI	High Performance Human-Machine Interface
HRT	Hydraulic Retention Time
HSRP	Hot Standby Router Protocol
ICS	industrial control system
IEEE	Institute of Electrical and Electronics Engineers
IGMP	Internet Group Management Protocol
IP	Internet Protocol
IS	Intermediate System
KPUD	Kitsap Public Utility District
KWWTP	Kingston Waste Water Treatment Plant
LAN	Local-area network
LED	Light-emitting diode
LIMS	Laboratory information management system
LTE	Long-Term Evolution
MB	Megabyte(s)
MCC	Motor control center
N/A	Not applicable
NFPA	National Fire Protection Association
NMS	Network monitoring system
OSPF	Open Shortest Path First
OT	Operational Technology
OIT	Operator interface terminal
PBR	Policy-Based Routing
PC	Personal computer
PCAP	Network Packet Analyzer and Capture
PLC	Programmable logic controller
PS	Pump Station

QCC	Quality Controls Corporation
RIO	remote input/output
RIP	Routing Information Protocol
RTD	resistance temperature detector
RTU	remote telemetry unit
SA	sensor/actuator
SCADA	supervisory control and data acquisition
SD	Secure Digital
SDN	software-defined network
Sewer Utility	Public Works Sewer Utility Division
SFP	small form-factor pluggable
SNMP	Simple Network Management Protocol
SPB	solids processing building
SVI	Switched Virtual Interface
SWWTP	Suquamish Wastewater Treatment Plant
TM	Technical Memorandum
TM-2	SCADA Use Cases and Operational Needs Technical Memorandum
TM-3	Technology Selection Technical Memorandum
TM-4	Sewer Utility SCADA Master Plan Technical Memorandum
TM-5	Project Overview SCADA Master Plan Technical Memorandum
TP/TX	Transport Protocol/Transmit
UPS	Uninterruptible Power Supply
USB	Universal Serial Bus
UV	ultraviolet
V	volt(s)
VAC	volt(s) alternating current
VDC	volt(s) direct current
VM	virtual machine
VRF	Virtual Routing and Forwarding
VRRP	Virtual Router Redundancy Protocol
WAN	wide-area network
WIMS	Water Information Management Solution
WWTP	wastewater treatment plant

1 Introduction

This *Project Overview SCADA Master Plan Technical Memorandum* (TM-5) documents the specific project descriptions, schedules, and cost breakdown for the Kitsap County (County) Public Works Sewer Utility Division (Sewer Utility) supervisory control and data acquisition (SCADA) system. This technical memorandum (TM) describes the current condition, arrangement, life-cycle state, and identified areas of risk identified in the *Existing System Overview Sewer Utility SCADA Master Plan Technical Memorandum* (TM-1). This technical memorandum also includes the evaluation approach by which these technological elements were selected based on the Sewer Utility's existing infrastructure and its future operational needs identified in the *SCADA Use Cases and Operational Needs Technical Memorandum* (TM-2). This technical memorandum includes the hardware and software platforms that were identified in the *Technology Selection Sewer Utility SCADA Master Plan* (TM-3) throughout the Kitsap County network drawn out in the *Concept Network Diagrams* (TM-4).

1.1 Approach

TM-5 completes the fifth phase of the *Sewer Utility SCADA Master Plan* (Master Plan), which is to provide project descriptions that include criticality, prerequisite projects, duration, and cost opinion. The projects have been organized into sections, Network Architecture, Hardware, Software, Documentation, and Other Software Packages. TM-5 will include a schedule which identifies the order of each project based on prioritization from Kitsap County.

1.2 Technical Memorandum Organization

This section describes the structure of the TM along with descriptions for each section.

1.2.1 Structure

TM-5 is organized into five sections, as described below:

- **Section 1: Introduction~~Introduction~~** summarizes the TM organization and the approach taken for the fifth phase of the Master Plan TM-5.
- **Section** Error! Reference source not found.**~~2~~: Improvement Projects Segmentation** identifies the 5 main sections that each project was organized into.
- **Section** Error! Reference source not found.**~~3~~: Overall Schedule** shows the overall project schedule that was developed based on project dependencies, budget, and project priority.

- **Section** Error! Reference source not found.**4: Summary of Cost Opinions** includes the cost for each project and total cost for each fiscal year.
- **Section** Error! Reference source not found.**5: Improvement Project Description** includes detailed project descriptions that include task schedule and cost breakdown.

2 Improvement Projects Segmentation

This section provides how each project has been organized according to type of project that is being implemented in each WWTP in Kitsap County. The projects have been separated into segments of Network Architecture, Hardware, Software, Documentation, and Other Software Packages.

2.1 Network Architecture

Projects within the Network Architecture section will be upgrading the current OT network within Kitsap County as well as implementing changes that will improve the overall network system design to meet the ICS standards.

Table 2-1. Projects List: Network Architecture Projects

Project ID	Facility	Project Name
NA-1	CKTP	Upgrade Central Kitsap Treatment Plant (CKTP) Control Room
NA-2	CKTP	Extend OT Network to County Public Works Annex Facility
NA-3	WWTPs and Remote Pump Stations	Remote Pump Station and WWTP Telemetry Improvements
NA-4	CKTP	CKTP OT Network Upgrades
NA-5	CKTP	Standardization to Managed Switches
NA-6	CKTP	ICS and OT Network Power Supply Improvements
NA-7	CKTP	DMZ and AVEVA InTouch Access Anywhere Implementation
NA-32	CKTP	Relocate Network Rack in Solids Processing Building

2.2 Hardware

Projects within the Hardware section will be upgrading or making changes to any hardware devices throughout Kitsap County WWTPs.

Table 2-2. Projects List: Hardware Projects

Project ID	Facility	Project Name
HW-8	WWTPs and Remote Pump Stations	Establish Sewer Utility PLC/OIT Platform Standard and Schedule Replacement of Select WWTP and Remote Pump Station PLCs/OITs
HW-9	WWTPs and Remote Pump Stations	Replace CKTP MCC DeviceNet Networks with Ethernet Capable Motor Controllers

HW-10	WWTPs and Remote Pump Stations	Develop a Formal Instrument Calibration and Maintenance Program
HW-11	CKTP	CKTP Digester Building PNL 6000 Relocation
HW-12	WWTPs and Remote Pump Stations	Include Integration of Composite Sampler Alarms and Monitoring with Replacement of Existing Samplers
HW-13	CKTP	Implement CKTP Instrumentation Improvements
HW-14	CKTP	Implement CKTP Automation Improvements
HW-15	KWWTP	Implement KWWTP Instrumentation Improvements
HW-16	KWWTP	Implement KWWTP Automation Improvements
HW-17	MWWTP	Implement MWWTP Instrumentation Improvements
HW-18	MWWTP	Implement MWWTP Automation Improvements
HW-19	SWWTP	Implement SWWTP Instrumentation Improvements
HW-20	SWWTP	Implement SWWTP Automation Improvements
HW-21	Remote Pump Stations	Implement Remote Pump Station Instrumentation Improvements
HW-22	Remote Pump Stations	Implement Remote Pump Station Automation Improvements

2.3 Software

Projects within the Software section will be upgrading or making changes to standalone HMI installations to AVEVA System Platform and the Historian.

Table 2-3. Projects List: Software Projects

Project ID	Facility	Project Name
SW-23	WWTPs	Upgrade WWTP Standalone SCADA HMI Installations to AVEVA System Platform with Managed InTouch Applications and Standardized Templates Based on HPHMI Concepts
SW-24	WWTPs and Remote Pump Stations	Implement an Alarm Management Program Based on ISA-18.2
SW-25	CKTP	Establish a Tiered Historian Implementation at CKTP
SW-26	WWTPs and Remote Pump Stations	Broaden the Data Set Archived by the Sewer utility Historian to Establish Foundations for More Comprehensive Process-and Asset-level Health and Performance Monitoring

2.4 Documentation

Projects within the Documentation section will be developing ICS Standards Document and the Control Strategy Document.

Table 2-4. Projects List: Documentation Projects

Project ID	Facility	Project Name
DC-27A	WWTPs and Remote Pump Stations	Develop ICS Standards - Hardware
DC-27B	WWTPs and Remote Pump Stations	Develop ICS Standards – Software and Governance
DC-28	WWTPs and Remote Pump Stations	Develop and Maintain Control Strategy Documentation

2.5 Other Software Packages

Projects within the Other Software Packages section will include implementing other software packages within Kitsap County. The Kitsap County will implement a laboratory information management system to automatically import historian data and analyze the trends. The county will also implement a Machine Interface server and utilize its ability to identify asset runtime thresholds, alarms, events, and analog set points that trigger a work order.

Table 2-5. Projects List: Other Software Package Projects

Project ID	Facility	Project Name
OS-29	CKTP	Complete Hach WIMS Implementation and Establish Data Exchange with AVEVA System Platform
OS-30	CKTP	Complete Asset Creation and Data Entry Required for LLumin Implementation, Establish Automatic Importing of Asset Runtimes, and Develop a Plan for Automating Work Order Generation
OS-31	WWTPs and Remote Pump Stations	Begin Leveraging the Sewer Utility's Power and Energy Data

This page intentionally left blank.

3 Overall Schedule

This section shows the overall cost project schedule that has been developed showing each project, utilizing the project dependencies outlined in each project description. The project schedule is based on a program start in fiscal year 2023 and with an anticipated completion in fiscal year 2029.

3.1 Projects in Fiscal Year 2023

Table 3-1. Projects in FY2023

Year	ID	Project	Cost	Duration
2023	DC-27A	Develop ICS Standards - Hardware	$154,000	4 months
2023	HW-8	Establish Sewer Utility PLC/OIT Platform Standard and Schedule Replacement of Select WWTP and Remote Pump Station PLCs/OITs	$5,000	2 months
2023	HW-10	Develop a Formal Instrument Calibration and Maintenance Program	$5,000	3 months
2023	NA-1	Upgrade Central Kitsap Treatment Plant (CKTP) Control Room	$5,000	12 months
2023	DC-28	Develop and Maintain Control Strategy Documentation	$167,000	18 months
2023	SW-23	Upgrade WWTP Standalone SCADA HMI Installations to AVEVA System Platform with Managed InTouch Applications and Standardized Templates Based on HPHMI Concepts	$0	0.05 months
		Total	**$336,000**	

3.2 Projects in Fiscal Year 2024

Table 3-2. Projects in FY2024

Year	ID	Project	Cost	Duration
2024	DC-27B	Develop ICS Standards – Software and Governance	$344,000	6 months
2024	NA-32	Relocate Network Rack in Solids Processing Building	$124,000	3 months
2024	NA-4	CKTP OT Network Upgrades	$213,000	6 months
2024	NA-2	Extend OT Network to County Public Works Annex Facility	$78,000	3 months
2024	NA-5	Standardization to Managed Switches	$136,000	2 months
		Total	**$895,000**	

3.3 Projects in Fiscal Year 2025

Table 3-3. Projects in FY2025

Year	ID	Project	Cost	Duration
2025	NA-6	ICS and OT Network Power Supply Improvements	$153,000	6 months
2025	SW-26	Broaden The Data Set Archived by the Sewer Utility Historian	$75,000	9 months
2025	HW-13	Implement CKTP Instrumentation Improvements	$184,000	18 months
2025	NA-3	Remote Pump Station and WWTP Telemetry Improvements	$264,000	24 months
2025	SW-24	Implement an Alarm Management Program Based on ISA-18.2	$54,000	6 months
2025	NA-7	DMZ and AVEVA InTouch Access Anywhere Implementation	$76,000	12 months
2025	HW-12	Include Integration of Composite Sampler Alarms and Monitoring with Replacement of Existing Samplers	$5,000	6 months
		Total	**$811,000**	

3.4 Projects in Fiscal Year 2026

Table 3-4. Projects in FY2026

Year	ID	Project	Cost	Duration
2026	HW-9	Replace CKTP MCC DeviceNet Networks w/ Ethernet Capable Motor Controllers	$94,000	9 months
2026	SW-25	Establish a Tiered Historian Implementation at CKTP	$89,000	3 months
2026	HW-14	Implement CKTP Automation Improvements	$154,000	12 months
2026	HW-15	Implement KWWTP Instrumentation Improvements	$105,000	6 months
2026	HW-17	Implement MWWTP Instrumentation Improvements	$173,000	12 months
		Total	**$615,000**	

3.5 Projects in Fiscal Year 2027

Table 3-5. Projects in FY2027

Year	ID	Project	Cost	Duration
2027	HW-16	Implement KWWTP Automation Improvements	$39,000	6 months

2027	HW-19	Implement SWWTP Instrumentation Improvements	$126,000	12 months
2027	HW-21	Implement Remote Pump Station Instrumentation Improvements	$202,000	6 months
2027	HW-18	Implement MWWTP Automation Improvements	$54,000	6 months
		Total	**$421,000**	

3.6 Projects in Fiscal Year 2028

Table 3-6. Projects in FY2028

Year	ID	Project	Cost	Duration
2028	HW-22	Implement Remote Pump Station Automation Improvements	$61,000	12 months
2028	HW-20	Implement SWWTP Automation Improvements	$48,000	6 months
2028	HW-11	CKTP Digester Building PNL 6000 and MCC Replacement	$80,000	12 months
2028	OS-31	Begin Leveraging the Sewer Utility's Power and Energy Data	$21,000	3 months
		Total	**$210,000**	

3.7 Projects in Fiscal Year 2029

Table 3-7. Projects in FY2029

Year	ID	Project	Cost	Duration
2029	OS-30	Complete Asset Creation and Data Entry Required for LLumin Implementation, Establish Automatic Importing of Asset Runtimes, and Develop a Plan for Automating Work Order Generation	$387,000	6 months
2029	OS-29	Complete Hach WIMS Implementation and Establish Data Exchange with AVEVA System Platform	$5,000	3 months
		Total	**$392,000**	

This page intentionally left blank.

4 Summary of Cost of Opinions

Budgetary opinions of probable costs were developed for each of the projects. These cost opinions were developed at a planning level of accuracy and include 10% labor contingency and 15% materials contingency.

4.1 Cost Breakdown for Each Fiscal year

Table 4-1. Cost Breakdown for each Fiscal Year

Allocation	FY2023 $ 336,000	FY2024 $ 895,000	FY2025 $ 811,000	FY2026 $ 615,000	FY2027 $ 421,000	FY2028 $210,000	FY2029 $392,000	Total $3,680,000
Hardware	$ 5,750	$ 189,480	$ 180,550	$ 236,900	$ 112,930	$ 57,500	$ -	
Software	$ -	$ 17,250	$ 9,775	$ 64,837	$ -	$ -	$ -	
Integration	$ 296,200	$ 587,800	$ 529,700	$ 239,800	$ 260,200	$ 128,700	$ 357,000	
Admin/QC/Misc .	$ 33,695	$ 99,480	$ 91,503	$ 74,155	$ 47,313	$ 23,620	$ 35,200	

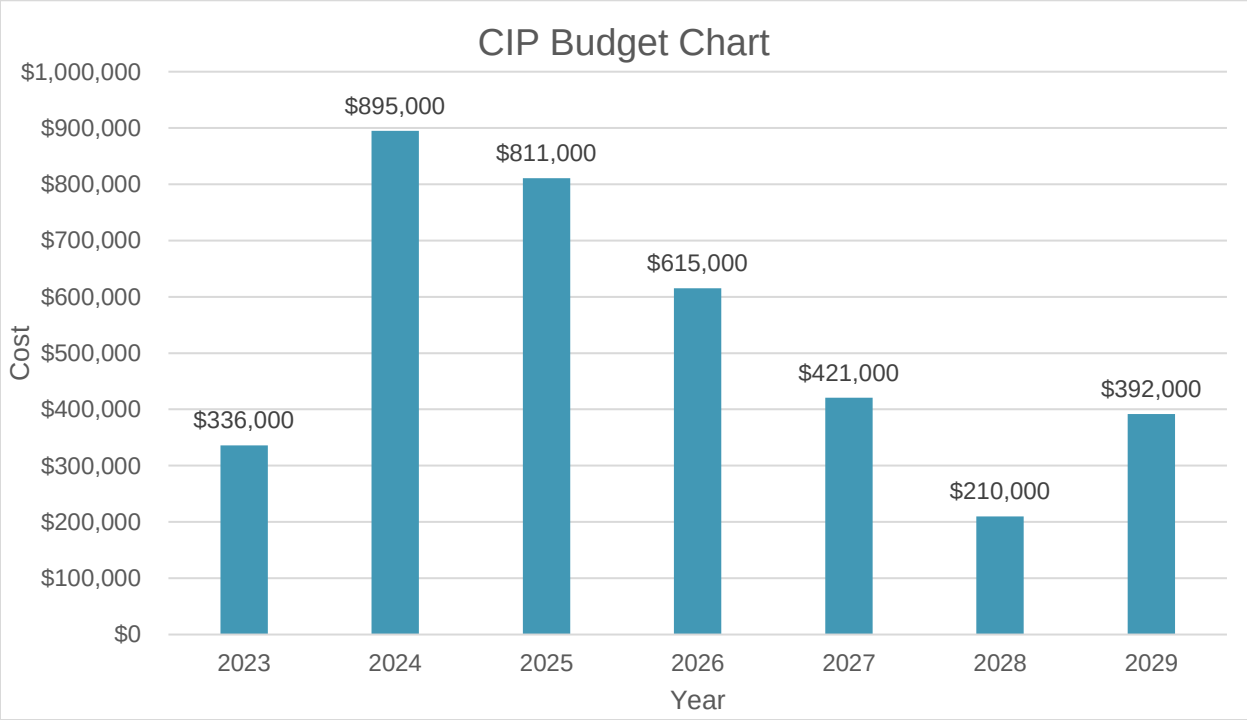

Figure 4-1. CIP Budget Chart

This page intentionally left blank.

5 Improvement Projects

This section includes detailed project descriptions for 33 projects. Each project description includes:

- Criticality
- Facilities
- Prerequisites
- Duration
- Description
- Impacted Stakeholders
- Cost Opinion

Table 5-1. Project List

ID	Project
Network Architecture	
NA-1	Upgrade Central Kitsap Treatment Plant (CKTP) Control Room
NA-2	Extend OT Network to County Public Works Annex Facility
NA-3	Remote Pump Station and WWTP Telemetry Improvements
NA-4	CKTP OT Network Upgrades
NA-5	Standardization to Managed Switches
NA-6	ICS and OT Network Power Supply Improvements
NA-7	DMZ and AVEVA InTouch Access Anywhere Implementation
NA-32	Relocate Network Rack in Solids Processing Building
Hardware	
HW-8	Establish Sewer Utility PLC/OIT Platform Standard and Schedule Replacement of Select WWTP and Remote Pump Station PLCs/OITs
HW-9	Replace CKTP MCC DeviceNet Networks with Ethernet Capable Motor Controllers
HW-10	Develop a Formal Instrument Calibration and Maintenance Program
HW-11	CKTP Digester Building PNL 6000 Relocation
HW-12	Include Integration of Composite Sampler Alarms and Monitoring with Replacement of Existing Samplers
HW-13	Implement CKTP Instrumentation Improvements
HW-14	Implement CKTP Automation Improvements
HW-15	Implement KWWTP Instrumentation Improvements
HW-16	Implement KWWTP Automation Improvements
HW-17	Implement MWWTP Instrumentation Improvements
HW-18	Implement MWWTP Automation Improvements
HW-19	Implement SWWTP Instrumentation Improvements
HW-20	Implement SWWTP Automation Improvements
HW-21	Implement Remote Pump Station Instrumentation Improvements
HW-22	Implement Remote Pump Station Automation Improvements
Software	

ID	Project
SW-23	Upgrade WWTP Standalone SCADA HMI Installations to AVEVA System Platform with Managed InTouch Applications and Standardized Templates Based on HPHMI Concepts
SW-24	Implement an Alarm Management Program Based on ISA-18.2
SW-25	Establish a Tiered Historian Implementation at CKTP
SW-26	Broaden the Data Set Archived by the Sewer utility Historian to Establish Foundations for More Comprehensive Process-and Asset-level Health and Performance Monitoring
Documentation	
DC-27A	Develop ICS Standards - Hardware
DC-27B	Develop ICS Standards – Software and Governance
DC-28	Develop and Maintain Control Strategy Documentation
Other Software Packages	
OS-29	Complete Hach WIMS Implementation and Establish Data Exchange with AVEVA System Platform
OS-30	Complete Asset Creation and Data Entry Required for LLumin Implementation, Establish Automatic Importing of Asset Runtimes, and Develop a Plan for Automating Work Order Generation
OS-31	Begin Leveraging the Sewer Utility's Power and Energy Data

5.1 Network Architecture Projects

Project Name	**Upgrade Central Kitsap Treatment Plant (CKTP) Control Room**
Project ID	**NA-1**
Criticality	Medium
Facilities	▪ CKTP
Prerequisites	▪ DC-27A
Duration	12 Months
Description	This project will establish a central monitoring location at the CKTP for all pump stations and WWTPs. To do so, the existing control room in the Solids Processing Building (SPB) will be upgraded to a suitable centralized monitoring location to meet monitoring requirements. Large-format displays will be installed for static display of overview screens for the pump stations and WWTPs. The Large-format displays will also be used to display operator-selected screens to support group discussion and decision making. Two SCADA PCs will be installed with access to HMI screens, Historian clients, and data visualization and dashboarding software applications. Four monitors will be installed for each PC to enable simultaneous display of multiple software application screens. This project can be performed at the same time as the upgrades for the standalone SCADA HMI installations to AVEVA System Platform (SW-23). In the event of a power outage at CKTP, UPS and backup battery packs will be installed to provide a minimum of 4 hours of backup power for the control room workstations and displays. Backup power will also be installed for the network servers as well. It is assumed that AVEVA licensing is part of a separate project and not included in this costing.

Project Name	Upgrade Central Kitsap Treatment Plant (CKTP) Control Room		
	This project will be handled internally by the Sewer Utility. Project is currently underway - 4 27" monitors (duplicating construction building 103).		
Impacted Stakeholders	Operation Staff I&C Technician Public Works Management		
Cost Opinion*	**CAPITAL COSTS**	**%**	**COST OPINION***
	Hardware	-	-
	Software	-	-
	Integration	-	$5,000
	Administration/Quality Control	10%	-
	MISC Expenses	-	-
	TOTAL CAPITAL COSTS	**-**	**$5,000**
	ANNUAL O&M COSTS	**%**	**COST OPINION***
	TOTAL ANNUAL COSTS**	**-**	**0**

*Refer to **Appendix A** for more information on the cost opinion approach. Totals and subtotals are rounded up to the nearest $1,000.

Project Name	**Extend OT Network to County Public Works Annex Facility**		
Project ID	**NA-2**		
Criticality	Medium		
Facilities	▪ County Public Works Annex Facility		
Prerequisites	▪ None		
Duration	3 Months		
Description	The OT network will be extended to the County Public Works Annex Facility to establish a secondary monitoring location for its WWTPs and remote pump stations. A Host Identity Protocol Switch (HIP Switch) will be installed at this facility and a dedicated SCADA PC will be installed with the Sewer Utility's Tempered Network Airwall System deployment. This project will be tied into the backup database server project.		
Impacted Stakeholders	Operation Staff I&C Technician		
Cost Opinion*	**CAPITAL COSTS**	**%**	**COST OPINION***
	Hardware	-	$21,850
	Software	-	$17,250
	Integration	-	$27,500
	Administration/Quality Control	10%	$6,660
	MISC Expenses	-	$5,000
	TOTAL CAPITAL COSTS	**-**	**$78,000**
	ANNUAL O&M COSTS	**%**	**COST OPINION***
	TOTAL ANNUAL COSTS**	**-**	**0**

*Refer to **Appendix A** for more information on the cost opinion approach. Totals and subtotals are rounded up to the nearest $1,000.

Project Name	**Remote Pump Station and WWTP Telemetry Improvements**		
Project ID	**NA-3**		
Criticality	Medium		
Facilities	▪ WWTPs and Remote Pump Stations		
Prerequisites	▪ NA-4, NA-5, DC-27A, DC-27B		
Duration	24 Months		
Description	This project will upgrade the telemetry system is required for near-real-time monitoring and alarming for the remote pump stations. To accomplish this, the Sewer Utility will continue to work with Quality Controls Corporation to transition the remote pump stations to a cellular wide-area network (WAN). Before the transition, a site survey will take place to assess the signal strength of the Verizon Wireless Network at each pump station location. Due to unpredictable latency difficulties and increasing pump stations introduced to the WAN, 2 cellular routers will be placed at CKTP. This solution will mitigate latency issues as well as provide a layer of redundancy for the communication links between the remote pump station and CKTP. Along with the WAN implementation, the current very high frequency (VHF) licensed radios will be left as is in case cellular WAN communications are lost. To achieve near-real-time monitoring and alarming at the remote pump stations, DNP3 protocol will be utilized to incorporate a store-and-forward functionality. DNP3 protocol will be implemented in the existing Allen-Bradley Micrologix 1400 PLCs, which are located at the remote telemetry unit (RTU) panels at each pump station. A report-by-exception telemetry solution will be replacing the current round-robin polling to reduce the data exchange volume. This will be using the DNP3 protocol which will be implemented with the existing Micrologix 1400 PLCs as well. For the Sewer utility to assign accurate times to events and eliminate data loss, the existing MTU PLC will be replaced with a SCADA server at the CKTP to serve as a DNP3 master. Telemetry Server software, offered by AVEVA, will be integrated with the System platform offering, which will be easier to maintain than what is currently in place. To have accurate communication status and performance, the uptime percentage will be displayed at the HMI for the previous 24 hours and all history since the last manual reset. This will give the Sewer Utility staff the ability to configure the timer interval and number of consecutive unsuccessful polls that would initiate a loss of communications alarm from the HMI. In the event of an outage and to preserve alarm notifications, HIP switches will be provisioned with a cellular expansion module and a SIM card that will be activated on the Sewer Utility's cellular WAN.		
Impacted Stakeholders	Operation Staff I&C Technician		
Cost Opinion*	**CAPITAL COSTS**	**%**	**COST OPINION***
	Hardware	-	$29,900
	Software	-	$9,775
	Integration	-	$195,800
	Administration/Quality Control	10%	$23,548
	MISC Expenses	-	$5,000
	TOTAL CAPITAL COSTS	**-**	**$264,000**

Project Name	Remote Pump Station and WWTP Telemetry Improvements		
	ANNUAL O&M COSTS	**%**	**COST OPINION***
	TOTAL ANNUAL COSTS**	**-**	**$1,600**

*Refer to **Appendix A** for more information on the cost opinion approach. Totals and subtotals are rounded up to the nearest $1,000.

Project Name	**CKTP OT Network Upgrades**		
Project ID	**NA-4**		
Criticality	High		
Facilities	▪ County Public Works Annex Facility (Solids Processing Building)		
Prerequisites	▪ DC-27B, NA-32		
Duration	6 Months		
Description	To consolidate the network infrastructure at CKTP, the rack-mounted servers and distribution switches for the OT network will be placed in one or more enclosed network racks within the SPB. The network racks will be sized for standard 19-inch equipment and have seismic testing certifying their suitability for installation in the seismic zone within CKTP. The rack cabinet enclosures will be wide enough to accommodate vertical cable management hardware on either side of the rack. The network racks will be placed in either the SPB Control room or in the ground floor of the SPB annex. The unmanaged switch, located in the SPB, will be replaced with a stacked Layer 3 distribution switch. This replacement will eliminate the single point of failure and establish routing capabilities at the OT network distribution layer. The two managed switches located in Panel 8580A, also located in SPB, will be replaced and the fiber-optic cable connections will be patched directly to the new Layer 3 distribution switches. The OT network HIP switches, located in the CKTP Administration and Laboratory building electrical rooms, will be relocated to the new network racks that will be placed in the SPB. For the relocation of these switches, a 1 GbE, multi-mode fiber-optic small form-factor pluggable (SFP) module will be inserted to the combination port on the KPUD Carrier Ethernet Switch where the existing Category Cable connection to the HIP switch is made. The SFP module will be patched to the existing fiber-optic patch panel mounted to the electrical room communications backboard to establish a connection to the SPB communications cabinet, using the existing fiber-optic cable between the two buildings. Afterwards, the Category cable along with the HIP switch, 24 VDC power supply components, and OT network switch mounted to the communications backboard will be removed. The UPS that is in the electrical room will be removed, instead UPS power will be provided to the KPUD Carrier Ethernet Switch located in the electrical room network rack. This will be done by installing a UPS in the existing electrical room network rack. This project will also include creating the Management, Power Monitoring, and Industrial Control System VLAN for the WWTPs after the managed switches have been installed. New IP address may also be configured to the OT network devices.		
Impacted Stakeholders	Operation Staff I&C Technician Sewer Utility IT staff		
Cost Opinion*	**CAPITAL COSTS**	**%**	**COST OPINION***
	Hardware	-	$75,900
	Software	-	-
	Integration	-	$112,800
	Administration/Quality Control	10%	$18,870

Project Name	CKTP OT Network Upgrades		
	MISC Expenses	-	$5,000
	TOTAL CAPITAL COSTS	**-**	**$213,000**
	ANNUAL O&M COSTS	**%**	**COST OPINION***
	TOTAL ANNUAL COSTS**	**-**	**0**

*Refer to **Appendix A** for more information on the cost opinion approach. Totals and subtotals are rounded up to the nearest $1,000.

Project Name	**Standardization to Managed Switches**		
Project ID	**NA-5**		
Criticality	High		
Facilities	▪ CKTP		
Prerequisites	▪ NA-32		
Duration	2 months		
Description	This project will standardize using managed access switches for the OT network. This will provide a uniform management interface for maintaining OT network access switches and reduce spare switch inventory requirements. The standardized switches will support Layer 2 management functionality for network segmentation, traffic filtering (IGMP), and implementation of cybersecurity controls. The switch will also have gigabit downlink ports to accommodate the gigabit port speeds of modern ICS devices. The standardized switches will replace the 5 current unmanaged switches that were mentioned in TM-1 at Table 2-1 (the unmanaged switches in the Vendor Package systems will not be replaced as part of this project). This project will establish redundant cable paths for critical OT network segments between building access switches at CKTP and the distribution switch stack located in the SPB. Depending on the costs, either a star topology or a ring topology network will be implemented. As redundant fiber-optic cables will be implemented, the project will utilize single-mode fiber-optic cables for communication links. Specifically, the fiber-optic cable between the CKTP administration, laboratory building electrical room, and SPB will be replaced with the single-mode fiber-optic cable. For costing, only minimal switch configuration such as disabling unused ports have been included.		
Impacted Stakeholders	Operation Staff I&C Technician		
Cost Opinion*	**CAPITAL COSTS**	**%**	**COST OPINION***
	Hardware	-	$34,500
	Software	-	-
	Integration	-	$84,200
	Administration/Quality Control	10%	$11,870
	MISC Expenses	-	$5,000
	TOTAL CAPITAL COSTS	**-**	**$136,000**
	ANNUAL O&M COSTS	**%**	**COST OPINION***
	TOTAL ANNUAL COSTS**	**-**	**0**

*Refer to **Appendix A** for more information on the cost opinion approach. Totals and subtotals are rounded up to the nearest $1,000.

Project Name	**ICS and OT Network Power Supply Improvements**		
Project ID	**NA-6**		
Criticality	High		
Facilities	▪ CKTP		
Prerequisites	▪ NA-4, DC-27B		
Duration	6 months		
Description	This project will include installing UPS power to the PLC panels throughout the WWTPs and Remote Pump Stations mentioned in TM-1 in Table 3-1. This standalone UPS approach will also be implemented for the Sewer Utility's PLC and RIO control panels that do not have backup power. The PLC control panels at CKTP will have a minimum backup power of 15 minutes, while the remote PLCs and RIO panels will have a backup power of up to 4 to 6 hours if space is available. Some existing panels will not have the space to support a UPS large enough to provide 6 hours of backup power. All UPS statuses, warnings, and alarms will be monitored by the SCADA system and integrated into the SCADA HMI screens, and alarm notification system. To meet this requirement, the UPSs will have Ethernet Communication options that can be integrated with the SCADA software, utilizing Ethernet protocols like Modbus Transmission Control Protocol. The Sewer Utility will standardize on carrying redundant power supplies to the ICS and OT network devices. All rack-mounted OT network switches, servers, and other network appliances will be standardized with dual onboard power supplies. Installation of the network rack-mounted UPS have been covered in the CKTP OT Network Upgrade project (NA-4).		
Impacted Stakeholders	I&C Technician		
Cost Opinion*	**CAPITAL COSTS**	**%**	**COST OPINION***
	Hardware	-	$58,650
	Software	-	-
	Integration	-	$75,900
	Administration/Quality Control	10%	$13,455
	MISC Expenses	-	$5,000
	TOTAL CAPITAL COSTS	**-**	**$153,000**
	ANNUAL O&M COSTS	**%**	**COST OPINION***
	TOTAL ANNUAL COSTS**	**-**	**0**

*Refer to **Appendix A** for more information on the cost opinion approach. Totals and subtotals are rounded up to the nearest $1,000.

Project Name	**DMZ and AVEVA InTouch Access Anywhere Implementation**		
Project ID	**NA-7**		
Criticality	Medium		
Facilities	▪ CKTP		
Prerequisites	▪ NA-1, NA-4, NA-6, DC-27A, DC-27B		
Duration	12 Months		
Description	This project will implement an industrial DMZ to handle data exchanges between the industrial and enterprise zones to provide a more secure method of data flow for the ICS assets. The network architecture will be established with a single entry to the industrial DMZ from the enterprise zone. The project will set up the Virtual Machine Server in the DMZ and implement AVEVA Intouch Access Anywhere for mobile access to the Sewer Utility's SCADA HMI Screens for the I&C technicians, third-party system integrators, and Sewer Utility Staff. Multi-factor authentication will be included during implementation for users to gain access to the industrial DMZ and will be handled by the County IS Department. This will require the users to access the industrial DMZ through the Sewer Utility business LAN via the VPN service maintained by the County IS department. The Sewer Utility will coordinate with the County IS department to make use of existing IT infrastructure and software licensing, such as Mobile Device Management (MDM) software, Operating System (OS) and Virtualization software (VMWare or Microsoft Hyper-V). The County IS Department will manage the implementation of the Firewall and switches for the DMZ. The County IS Department will also manage the implementation of the web portal, Jump Box (Remote Access), Anti-Virus, patch server, backups, Syslog/SIEM, Email relay, and OT-DMZ Domain Controller. It will be necessary to utilize HACH WIMS or another BI dashboard during the implementation of this project.		
Impacted Stakeholders	Operation Staff I&C Technician System Integrators County IS Department Sewer Utility IT Staff		
Cost Opinion*	**CAPITAL COSTS**	**%**	**COST OPINION***
	Hardware	-	$17,250
	Software	-	-
	Integration	-	$47,300
	Administration/Quality Control	10%	$6,455
	MISC Expenses	-	$5,000
	TOTAL CAPITAL COSTS	**-**	**$76,000**
	ANNUAL O&M COSTS	**%**	**COST OPINION***
	TOTAL ANNUAL COSTS**	**-**	**0**

*Refer to **Appendix A** for more information on the cost opinion approach. Totals and subtotals are rounded up to the nearest $1,000.

Project Name	**Relocate Network Rack in Solids Processing Building**		
Project ID	**NA-32**		
Criticality	Medium		
Facilities	▪ County Public Works Annex Facility (Solids Processing Building)		
Prerequisites	▪ DC-27A, DC-27B		
Duration	3 Months		
Description	This project will include locating a secure area for the new network rack that will be in the Solids Processing Building. The new location must have the required space and access to run all required network cables to/from the network rack to support connection to all necessary OT network devices. The new location where the network rack will be placed must be climate assisted to support the associated hardware. To limit access to authorized personnel only, the network rack will be either locked or in a locked room.		
Impacted Stakeholders	Operation Staff I&C Technicians		
Cost Opinion*	**CAPITAL COSTS**	**%**	**COST OPINION***
	Hardware	-	$57,500
	Software	-	-
	Integration	-	$55,000
	Administration/Quality Control	10%	$11,250
	MISC Expenses	-	-
	TOTAL CAPITAL COSTS	**-**	**$124,000**
	ANNUAL O&M COSTS	**%**	**COST OPINION***
	TOTAL ANNUAL COSTS**	**-**	**0**

*Refer to **Appendix A** for more information on the cost opinion approach. Totals and subtotals are rounded up to the nearest $1,000.

5.2 Hardware Projects

Project Name	**Establish Sewer Utility PLC/OIT Platform Standard and Schedule Replacement of Select WWTP and Remote Pump Station PLCs/OITs**		
Project ID	**HW-8**		
Criticality	Medium		
Facilities	▪ WWTPs and Remote Pump Stations		
Prerequisites	▪ DC-27A		
Duration	2 Months		
Description	Based on the current information of the life cycle of the existing PLCs and OITs, after the standards are created in project DC-27, the PLCs and OITs that need to be replaced will be prioritized by years in service, manufacturer support, and criticality of the application. No dedicated project is identified within this portfolio, but each PLC/OIT will be replaced as needed. This project will be handled internally by the Sewer Utility.		
Impacted Stakeholders	Operation Staff I&C Technicians		
Cost Opinion*	**CAPITAL COSTS**	**%**	**COST OPINION***
	Hardware	-	-
	Software	-	-
	Integration	-	$5,000
	Administration/Quality Control	10%	**-**
	MISC Expenses	-	-
	TOTAL CAPITAL COSTS	**-**	**$5,000**
	ANNUAL O&M COSTS	**%**	**COST OPINION***
	TOTAL ANNUAL COSTS**	**-**	**0**

*Refer to **Appendix A** for more information on the cost opinion approach. Totals and subtotals are rounded up to the nearest $1,000.

Project Name	**Replace CKTP MCC DeviceNet Networks with Ethernet Capable Motor Controllers**		
Project ID	**HW-9**		
Criticality	Medium		
Facilities	▪ WWTPs and Remote Pump Stations		
Prerequisites	▪ NA-4, DC-27A, DC-27B		
Duration	9 Months		
Description	This project will retrofit the existing MCC units in order to preserve the recently upgraded MCC units when eliminating the DeviceNet network. The PowerFlex 700 AC Drives will be upgraded with the 20-COMM-E EtherNet/IP adapter and the PowerFlex 753 AC Drives will be upgraded with the 20-750-ENETR EtherNet/IP option module to replace the existing DeviceNet adapters/modules. The Allen-Bradley E3 Plus electronic overlay relays will be replaced with the E300 electronic overlay relays or other viable replacements that are available during the time of DeviceNet network replacement work. The DeviceNet Starter Auxiliary components will also be replaced with I/O expansion modules compatible with the E300 relays. The size of the MCC units will have to be assessed as some hardwired signals are preferred (auto status and motor high temp alarm) and will require more control relays and additional field wiring. The PLC panels will need additional I/O modules and field terminal blocks to accommodate the new hardwired I/O. This will lead to additional RIO racks in the enclosures, subpanel replacement, and/or new control panels. Additional conduits and control wiring will be required in the electrical room to establish hardwired I/O connections between the MCC units and the control panels. With the additional hardwired I/O, the VFD communication adapters/modules and overload relays will require Ethernet connection to the OT network. The project will use Category 6 cable with 600V insulation for these connections. The existing PLC programs will be modified to realign with the hardwired I/O points and the EtherNet/IP data exchange. This project is considered an opportunity project by the county and can be rescheduled if necessary.		
Impacted Stakeholders	Operation Staff I&C Technicians System Integrators		
Cost Opinion*	**CAPITAL COSTS**	**%**	**COST OPINION***
	Hardware	-	$49,450
	Software	-	-
	Integration	-	$31,900
	Administration/Quality Control	10%	$8,135
	MISC Expenses	-	$5,000
	TOTAL CAPITAL COSTS	**-**	**$94,000**
	ANNUAL O&M COSTS	**%**	**COST OPINION***
	TOTAL ANNUAL COSTS**	**-**	**0**

*Refer to Appendix A for more information on the cost opinion approach. Totals and subtotals are rounded up to the nearest $1,000.

Project Name	**Develop a Formal Instrument Calibration and Maintenance Program**		
Project ID	**HW-10**		
Criticality	Medium		
Facilities	▪ WWTPs and Remote Pump Stations		
Prerequisites	▪ DC-27A		
Duration	3 Months		
Description	This project will develop a formal instrument calibration and maintenance program for its WWTPs and remote pump stations. The program will accomplish the following: • Determine the individuals responsible for scheduling calibration events, performing calibration procedures, maintaining program documentation, and reviewing calibration records to determine when additional corrective action is required. • Maintain an accurate inventory of installed instrumentation with manufacturer, model, and part number(s).The County may utilize the Hach WIMS system they plan to implement in Project OS-29. • Document instrument range, last calibration date, next calibration date, accuracy requirements, most recent calibrated zero and span settings for analog instruments, and most recent calibrated set point (rising or falling) and deadband settings for switches. • Document instrument-specific calibration procedures based on instrument manufacturer recommendations. Calibration procedures should include steps to test the instrument sensor (input), instrument 4–20 milliampere (mA) output or switch contact state, and instrument loop, including verification of correct value/state being displayed at the HMI or OIT. • Document ideal frequency of calibration activities based on manufacturer recommendations, field observations, instrument criticality, and past instrument performance. • Schedule calibration activities and ensure that they are performed and documented. • Maintain calibration records that document as-found settings, as-found test results, final calibration settings, final calibration test results, field observations, individual(s) who performed the calibration, and date of calibration This project will be handled internally by the Sewer Utility and is considered an opportunity project by the county and can be rescheduled if necessary.		
Impacted Stakeholders	Operation Staff I&C Technicians		
Cost Opinion*	**CAPITAL COSTS**	**%**	**COST OPINION***
	Hardware	-	-
	Software	-	-
	Integration	-	$5,000
	Administration/Quality Control	10%	-
	MISC Expenses	-	-
	TOTAL CAPITAL COSTS	**-**	**$5,000**
	ANNUAL O&M COSTS	**%**	**COST OPINION***

Project Name	Develop a Formal Instrument Calibration and Maintenance Program		
	TOTAL ANNUAL COSTS**	**-**	**0**

*Refer to Appendix A for more information on the cost opinion approach. Totals and subtotals are rounded up to the nearest $1,000.

Project Name	**CKTP Digester Building PNL 6000 Relocation**		
Project ID	**HW-11**		
Criticality	Low		
Facilities	▪ CKTP		
Prerequisites	▪ NA-4, DC-27A, DC-27B		
Duration	12 Months		
Description	This project will relocate PNL 6000 or establish a replacement PLC control panel in a properly conditioned environment that is not classified as a hazardous-area classification. The MCC in the digester building is planned to be relocated due to the poor conditions in the current location but is being considered as part of the larger project and therefore not in the scope of this master plan so cost is not included. This project is considered an opportunity project by the county and can be rescheduled if necessary.		
Impacted Stakeholders	Operation Staff I&C Technicians System Integrators		
Cost Opinion*	**CAPITAL COSTS**	**%**	**COST OPINION***
	Hardware	-	$57,500
	Software	-	-
	Integration	-	$11,000
	Administration/Quality Control	10%	$6,850
	MISC Expenses	-	$5,000
	TOTAL CAPITAL COSTS	**-**	**$80,000**
	ANNUAL O&M COSTS	**%**	**COST OPINION***
	TOTAL ANNUAL COSTS**	**-**	**0**

*Refer to Appendix A for more information on the cost opinion approach. Totals and subtotals are rounded up to the nearest $1,000.

Project Name	Implement CKTP Instrumentation Improvements
Project ID	**HW-13**
Criticality	Medium
Facilities	▪ CKTP
Prerequisites	▪ NA-4, DC-27A, DC-27B, DC-28
Duration	18 Months
Description	This project will perform an assessment of their Instrumentation equipment to determine the need for upgrades and replacement. The project will include the following: • Perform an alternatives analysis for implementing a direct means of plant effluent flow measurement to assess costs and feasibility of available options. • Provide additional analytical probes and, potentially, aeration flowmeters per recommendations from a separate BNR optimization task in the Sewer Utility facility planning program. • Install a flowmeter on the plant wastewater pump station discharge line to obtain a return flow measurement to upstream of the primary diversion channel. A magmeter could be installed in a new meter vault downstream from the valve vault potentially since there is no adequate room in the existing wastewater pump station valve vault. • Install a flowmeter on the primary sludge line to Gravity Thickeners to monitor primary sludge flow from the primary sludge pumps. • Install a flowmeter on the scum line to Gravity Thickeners to monitor primary and secondary scum flow from the scum pumps. • Install a flowmeter on the mixed liquor line from the mixed liquor distribution channel foam wasting sump to monitor mixed liquor flow to the digesters. • Install flowmeters on the thickened sludge lines from the Gravity Thickeners to the thickened sludge blending tank to monitor individual thickened sludge flows from each Gravity Thickener. • Install a flowmeter on the thickened sludge line from the hauled sludge receiving station to the thickened sludge blending tank to monitor hauled sludge flows received from remote WWTPs. • Install flowmeters on the digested sludge lines from the digesters to the centrifuges to monitor individual digested sludge flows from each digester. • During next septage receiving station upgrade, ensure that the replacement vendor package system includes incoming septage flow monitoring. • Service or replace the lower explosive limit (LEL) transmitter on the headworks odor control fan ductwork. • Service or replace the chlorine residual and turbidity analyzers associated with the reclaimed water system. • Service or replace the thermal dispersion flowmeter installed on the aeration line for the aerated grit tank 1 stage 2 diffuser. • Install suspended solids probes in the aeration basins and WAS pump discharge line to support automated calculation of hydraulically determined solids retention time. If installation is infeasible, a probe could be installed on

	the RAS pumps discharge line with the assumption that the suspended solids profile would be the same. This project is considered an opportunity project by the county and can be rescheduled if necessary.		
Impacted Stakeholders	Operation Staff I&C Technicians System Integrators		
Cost Opinion*	**CAPITAL COSTS**	**%**	**COST OPINION***
	Hardware	-	$74,750
	Software	-	-
	Integration	-	$88,000
	Administration/Quality Control	10%	$16,275
	MISC Expenses	-	$5,000
	TOTAL CAPITAL COSTS	**-**	**$184,000**
	ANNUAL O&M COSTS	**%**	**COST OPINION***
	TOTAL ANNUAL COSTS**	**-**	**0**

*Refer to Appendix A for more information on the cost opinion approach. Totals and subtotals are rounded up to the nearest $1,000.

Project Name	**Include Integration of Composite Sampler Alarms and Monitoring with Replacement of Existing Samplers**		
Project ID	**HW-12**		
Criticality	Medium		
Facilities	▪ WWTPs and Remote Pump Stations		
Prerequisites	▪ SW-24, DC-27A, DC-27B		
Duration	6 Months		
Description	This project will integrate the composite samplers and will monitor sampler alarms and statuses at SCADA. The Sewer Utility will need to communicate the SCADA requirements to the vendors so that the appropriate hardwired and communication options can be integrated. The Sewer Utility has received quotes for the samplers from vendors and are currently evaluating them, so sampler costs were not included. This project will be handled internally by the Sewer Utility and this project is considered an opportunity project by the county and can be rescheduled if necessary.		
Impacted Stakeholders	Operation Staff I&C Technicians		
Cost Opinion*	**CAPITAL COSTS**	**%**	**COST OPINION***
	Hardware	-	-
	Software	-	-
	Integration	-	$5,000
	Administration/Quality Control	10%	**-**
	MISC Expenses	-	-
	TOTAL CAPITAL COSTS	**-**	**$5,000**
	ANNUAL O&M COSTS	**%**	**COST OPINION***
	TOTAL ANNUAL COSTS**	**-**	**0**

*Refer to Appendix A for more information on the cost opinion approach. Totals and subtotals are rounded up to the nearest $1,000.

Project Name	**Implement CKTP Automation Improvements**		
Project ID	**HW-14**		
Criticality	Medium		
Facilities	▪ CKTP		
Prerequisites	▪ NA-4, HW-13, DC-27A, DC-27B, DC-28		
Duration	12 Months		
Description	This project will perform an assessment of their Automation equipment to determine the need for upgrades and replacement. The project will include the following: • Develop a SCADA HMI screen to monitor the comprehensive liquid stream flow balance for the plant along with the hydraulic retention time values for tanks basins, and clarifiers. • Develop a SCADA HMI screen for monitoring the comprehensive solid stream flow balance for the plant along with detention time values for GBTs, digesters, and the thickened sludge blending tank. • Provide PLC programming and SCADA HMI modifications to restore automated control of the BNR process per recommendations from the separate BNR optimization task in the Sewer Utility facility planning program. • Develop a SCADA HMI screen to provide operators with situational awareness for the load shedding and emergency load sequencing during planned and unplanned transitions between utility and standby generator power. • Replace the headworks odor control biofilter sprinkler control panel and associated instrumentation to restore automated control of the biofilter sprinklers/soaker hose. The Sewer Utility will allow the SCADA manual controls to be implemented as an optional override of the sprinkler control panel to allow operations staff to manually initiate and schedule timer-based watering of the biofilter from SCADA HMIs. • Provide PLC programming modifications to establish a low-level shutdown interlock for the thickened sludge blending tank circulation pump and digester feed pumps based on tank level transmitter measurement to support elimination of the thickened sludge blending tank low level switch. The Sewer Utility will also replace the low-level switch. • Establish monitoring of high torque warning and high-high torque shutdown conditions at SCADA for its primary clarifiers. This project is considered an opportunity project by the county and can be rescheduled if necessary.		
Impacted Stakeholders	Operation Staff I&C Technicians System Integrators		
Cost Opinion*	**CAPITAL COSTS**	**%**	**COST OPINION***
	Hardware	-	$86,825
	Software	-	-
	Integration	-	$48,400
	Administration/Quality Control	10%	$13,523

Project Name	Implement CKTP Automation Improvements		
	MISC Expenses	-	$5,000
	TOTAL CAPITAL COSTS	**-**	**$154,000**
	ANNUAL O&M COSTS	**%**	**COST OPINION***
	TOTAL ANNUAL COSTS**	**-**	**0**

*Refer to Appendix A for more information on the cost opinion approach. Totals and subtotals are rounded up to the nearest $1,000.

Project Name	**Implement KWWTP Instrumentation Improvements**		
Project ID	**HW-15**		
Criticality	Medium		
Facilities	▪ KWWTP		
Prerequisites	▪ NA-4, DC-27A, DC-27B, DC-28		
Duration	6 Months		
Description	This project will perform an assessment of their Instrumentation equipment at KWWTP to determine the need for upgrades. The project will include the following: • Install a flowmeter for the thickened sludge storage tank truck loadout station. • Install a flowmeter on the biofilter sump pump station discharge line to monitor biofilter drainage flow to the oxidation ditches. • Install a flowmeter on the process building sump pump station discharge line to monitor return flow to the headworks. • Install a flowmeter on the W2 line downstream from the hydropneumatic tank to monitor W2 flow to plant processes. • Install a flowmeter on the secondary scum pump discharge line to monitor secondary scum flow to the WAS/TWAS tanks. • Install suspended solids probes in the oxidation ditches and WAS line at KWWTP based on the outcome of suspended solids probe and hydraulically determined SRT calculation performance at CKTP. This project is considered an opportunity project by the county and can be rescheduled if necessary.		
Impacted Stakeholders	Operation Staff I&C Technicians		
Cost Opinion*	**CAPITAL COSTS**	**%**	**COST OPINION***
	Hardware	-	$36,225
	Software	-	-
	Integration	-	$55,000
	Administration/Quality Control	10%	$9,123
	MISC Expenses	-	$5,000
	TOTAL CAPITAL COSTS	**-**	**$105,000**
	ANNUAL O&M COSTS	**%**	**COST OPINION***
	TOTAL ANNUAL COSTS**	**-**	**0**

*Refer to Appendix A for more information on the cost opinion approach. Totals and subtotals are rounded up to the nearest $1,000.

Project Name	**Implement KWWTP Automation Improvements**		
Project ID	**HW-16**		
Criticality	Medium		
Facilities	▪ KWWTP		
Prerequisites	▪ NA-4, NA-7, HW-15, DC-27A, DC-27B, DC28		
Duration	6 Months		
Description	This project will perform an assessment of their Automation equipment at KWWTP to determine the need for upgrades and replacement. The project will include the following: • Develop a SCADA HMI screen for monitoring the comprehensive liquid stream flow balance for the plant along with HRT values for tanks, oxidation ditches, and clarifiers. • Develop a SCADA HMI screen for monitoring the comprehensive solid stream flow balance for the plant along with detention time values for WAS and TWAS tanks. • With favorable results from the suspended solids probes and hydraulically determined SRT calculations at CKTP, The Sewer Utility will develop PLC programming and SCADA HMI modifications to monitor mixed liquor suspended solids and WAS suspended solids and to calculate hydraulically determined SRT at KWWTP. This project is considered an opportunity project by the county and can be rescheduled if necessary.		
Impacted Stakeholders	Operation Staff I&C Technicians System Integrators		
Cost Opinion*	**CAPITAL COSTS**	**%**	**COST OPINION***
	Hardware	-	-
	Software	-	-
	Integration	-	$35,200
	Administration/Quality Control	10%	$3,520
	MISC Expenses	-	-
	TOTAL CAPITAL COSTS	**-**	**$39,000**
	ANNUAL O&M COSTS	**%**	**COST OPINION***
	TOTAL ANNUAL COSTS**	**-**	**0**

*Refer to Appendix A for more information on the cost opinion approach. Totals and subtotals are rounded up to the nearest $1,000.

Project Name	**Implement MWWTP Instrumentation Improvements**		
Project ID	**HW-17**		
Criticality	Medium		
Facilities	▪ MWWTP		
Prerequisites	▪ NA-4, DC-27A, DC-27B, DC28		
Duration	12 Months		
Description	This project will perform an assessment of their Instrumentation equipment at MWWTP to determine the need for upgrades and replacement. The project will include the following: • Install a flowmeter for the thickened sludge storage tank truck loadout station. • Evaluate the installation of an ultrasonic or radar level instrument at the existing Parshall flume downstream from the grit chamber to obtain this flow measurement. • Replace the magmeter on the sludge line feeding the GBT. • Install a flowmeter on the odor control blowdown sump discharge line to the headworks to monitor blowdown return from odor control. • Install a flowmeter on the W2 line downstream from the hydropneumatic tank to monitor W2 flow to plant processes. • Service or replace the flowmeter on the W3 line to restore monitoring of W3 flow to plant processes. • Install a flowmeter on the in-plant pump station discharge line to obtain return flow measurement to the headworks. • Install a flowmeter on the WAS line from the RAS pump station to the WAS tanks to monitor WAS flow. • Install a flowmeter on the secondary scum pump discharge line to monitor secondary scum flow to the WAS/TWAS tanks. • Consider installation of suspended solids probes in the aeration basins and WAS line at MWWTP based on the outcome of the suspended solids probe and hydraulically determined SRT calculation performance at CKTP. • Install analytical probes in the aeration basins to monitor the BNR process as part of the plant upgrade to adapt to new TN limits. • Install a level transmitter for the sodium hypochlorite tank and install local indication of tank level at the location from which the tank is filled. • Service or replace non-functional combustible gas-monitoring equipment in the sludge pumping gallery, headworks odor control system, and WAS tanks. This project is considered an opportunity project by the county and can be rescheduled if necessary.		
Impacted Stakeholders	Operation Staff		
Cost Opinion*	**CAPITAL COSTS**	**%**	**COST OPINION***
	Hardware	-	$64,400
	Software	-	-
	Integration	-	$88,000

Project Name	Implement MWWTP Instrumentation Improvements		
	Administration/Quality Control	10%	$15,240
	MISC Expenses	-	$5,000
	TOTAL CAPITAL COSTS	**-**	**$173,000**
	ANNUAL O&M COSTS	**%**	**COST OPINION***
	TOTAL ANNUAL COSTS**	**-**	**0**

*Refer to Appendix A for more information on the cost opinion approach. Totals and subtotals are rounded up to the nearest $1,000.

Project Name	**Implement MWWTP Automation Improvements**		
Project ID	**HW-18**		
Criticality	Medium		
Facilities	▪ MWWTP		
Prerequisites	▪ NA-4, NA-7, HW-17, DC-27A, DC-27B, DC-28		
Duration	6 Months		
Description	This project will perform an assessment of their Automation equipment at MWWTP to determine the need for upgrades and replacement. The project will include the following: • Develop a SCADA HMI screen for monitoring the comprehensive liquid stream flow balance for the plant along with HRT values for tanks, basins, and clarifiers. • Develop a SCADA HMI screen for monitoring the comprehensive solid stream flow balance for the plant along with detention time values for the WAS and TWAS tanks. • With favorable results from the suspended solids probes and hydraulically determined SRT calculations at CKTP, the Sewer Utility will develop PLC programming and SCADA HMI modifications to monitor mixed liquor suspended solids and WAS suspended solids and to calculate hydraulically determined SRT at MWWTP. • Develop PLC programming and SCADA HMI screen modifications to allow operations staff to schedule and adjust aeration blower operation time sequence from SCADA HMIs. • Install an electrically actuated isolation valve on the WAS line to the WAS tanks to enable SCADA control of the sludge wasting process. PLC programming and SCADA HMI screen modifications will be developed to add functionality for operations staff to manually open and close the valve from SCADA. • Wire a fault signal from the mixing channel blower motor starter to the discrete input at the LP-225 RIO rack in the headworks building and provide PLC programming and SCADA HMI screen modification to integrate the fault alarm. This project is considered an opportunity project by the county and can be rescheduled if necessary.		
Impacted Stakeholders	Operation Staff I&C Technicians		
Cost Opinion*	**CAPITAL COSTS**	**%**	**COST OPINION***
	Hardware	-	-
	Software	-	-
	Integration	-	$49,000
	Administration/Quality Control	10%	$4,900
	MISC Expenses	-	-
	TOTAL CAPITAL COSTS	**-**	**$54,000**
	ANNUAL O&M COSTS	**%**	**COST OPINION***
	TOTAL ANNUAL COSTS**	**-**	**0**

***Refer to Appendix A for more information on the cost opinion approach. Totals and subtotals are rounded up to the nearest $1,000.**

Project Name	**Implement SWWTP Instrumentation Improvements**		
Project ID	**HW-19**		
Criticality	Medium		
Facilities	▪ SWWTP		
Prerequisites	▪ NA-4, DC-27A, DC-27B, DC-28		
Duration	12 Months		
Description	This project will perform an assessment of their Instrumentation equipment at SWWTP to determine the need for upgrades and replacement. The project will include the following: • Service or replace the combustible gas monitoring equipment in the process building upper floor process room. • Install a flowmeter for the thickened sludge storage tank truck loadout station. • Install a radar level transmitter for monitoring and control of sludge storage tank level with a level switch that can provide a high level interlock and alarm. • Install DO probes in the SBRs. Depending on the outcome of ongoing facility planning, the Sewer Utility should consider additional analytical probes to facilitate improved monitoring and control of the BNR process. • Replace the damaged thermal dispersion flow switch on the RDT spray water supply line. • Consider the installation of suspended solids probes in the SBRs and WAS line at SWWTP based on the outcome of the suspended solids probe and hydraulically determined SRT calculation performance at CKTP. • Install a flowmeter on the discharge line from the drain collection pump station to monitor return flow to the headworks equipment. • Install a flowmeter on the W3 line downstream from the reclaimed water pumps to monitor W3 flow to plant processes. • Service or replace the process building fire alarm system (will need information on the square footage and feet of building to provide accurate cost estimate). This project is considered an opportunity project by the county and can be rescheduled if necessary.		
Impacted Stakeholders	Operation Staff I&C Technicians		
Cost Opinion*	**CAPITAL COSTS**	**%**	**COST OPINION***
	Hardware	-	$43,700
	Software	-	-
	Integration	-	$66,000
	Administration/Quality Control	10%	$10,970
	MISC Expenses	-	$5,000
	TOTAL CAPITAL COSTS	**-**	**$126,000**
	ANNUAL O&M COSTS	**%**	**COST OPINION***
	TOTAL ANNUAL COSTS**	**-**	**0**

*Refer to **Appendix A** for more information on the cost opinion approach. Totals and subtotals are rounded up to the nearest $1,000.

Project Name	**Implement SWWTP Automation Improvements**		
Project ID	**HW-20**		
Criticality	Medium		
Facilities	▪ SWWTP		
Prerequisites	▪ NA-4, NA-7, HW-19, DC-27A, DC-27B, DC-28		
Duration	6 Months		
Description	This project will perform an assessment of their Automation equipment at SWWTP to determine the need for upgrades and replacement. The project will include the following: • Develop a SCADA HMI screen for monitoring the comprehensive liquid stream flow balance for the plant along with HRT values for SBRs and tanks. • Develop a SCADA HMI screen for monitoring the comprehensive solid stream flow balance for the plant along with detention time values for the sludge storage tank. • Service or replace the effluent flow control valve to restore its ability to maintain positions from SCADA-issued commands. This will have to be done a shutdown and the Sewer Utility will utilize this shutdown to complete other upgrades as well. This project is considered an opportunity project by the county and can be rescheduled if necessary.		
Impacted Stakeholders	Operation Staff I&C Technicians		
Cost Opinion*	**CAPITAL COSTS**	**%**	**COST OPINION***
	Hardware	-	-
	Software	-	-
	Integration	-	$44,000
	Administration/Quality Control	10%	$4,400
	MISC Expenses	-	-
	TOTAL CAPITAL COSTS	**-**	**$48,000**
	ANNUAL O&M COSTS	**%**	**COST OPINION***
	TOTAL ANNUAL COSTS**	**-**	**0**

*Refer to **Appendix A** for more information on the cost opinion approach. Totals and subtotals are rounded up to the nearest $1,000.

Project Name	**Implement Remote Pump Station Instrumentation Improvements**		
Project ID	**HW-21**		
Criticality	Medium		
Facilities	▪ Remote Pump Stations		
Prerequisites	▪ NA-4, DC-27A, DC-27B, DC-28		
Duration	6 Months		
Description	This project will perform an assessment of their Instrumentation equipment at their remote pump stations to determine the need for upgrades and replacement. The project will include the following: • Install pressure transmitters on remote pump station force mains and monitor force main pressures. 12 pressure transmitters will be installed in the pump stations with PLC's installed already (reference table 3-1 in TM-1). • Service or replace the combustible gas monitoring equipment at the PS-24 wet well. • Replace PS-24 wet well level transducer and transmitter, which has been in service for about 20 years. With the replacement of the level transducer, a submergence shield will also be implemented. If the Sewer Utility is unable to replace the level transducer, then the current level transducer will be recalibrated and serviced. • Install a level transmitter for the PS-71 BIOXIDE storage tank. • Service or replace the combustible-gas monitoring equipment at the PS-71 wet well. This project is considered an opportunity project by the county and can be rescheduled if necessary.		
Impacted Stakeholders	Operation Staff I&C Technician		
Cost Opinion*	**CAPITAL COSTS**	**%**	**COST OPINION***
	Hardware	-	$69,230
	Software	-	-
	Integration	-	$110,000
	Administration/Quality Control	10%	$17,923
	MISC Expenses	-	$5,000
	TOTAL CAPITAL COSTS	**-**	**$202,000**
	ANNUAL O&M COSTS	**%**	**COST OPINION***
	TOTAL ANNUAL COSTS**	**-**	**0**

*Refer to **Appendix A** for more information on the cost opinion approach. Totals and subtotals are rounded up to the nearest $1,000.

Project Name	**Implement Remote Pump Station Automation Improvements**		
Project ID	**HW-22**		
Criticality	Medium		
Facilities	▪ Remote Pump Stations		
Prerequisites	▪ NA-4, NA-7, HW-21, DC-27A, DC-27B, DC-28		
Duration	12 Months		
Description	This project will perform an assessment of their Automation equipment at their remote pump stations to determine the need for upgrades and replacement. The project will include the following: • Develop SCADA HMI screens to provide a summary-level, process flow diagram depiction of the conveyance system associated with each WWTP. The summary conveyance system screens will display pump running status, flow, force main pressure, and indication of whether an alarm is active for each pump station. • Implement time-to-overflow monitoring for its critical (or all) pump stations. • Modify the existing PLC programming logic to favor energy efficient operating points while within normal level range in the wet well for pump stations with VFDs that are monitoring pump power and flow. • Review the hardwired relay logic and PLC programming for the existing pump controls to confirm the as-implemented conditions, which will contribute to the pump short cycling occurring at the pump station. After review of existing controls and near-real-time pump station data, the Sewer Utility will implement the appropriate control improvements to reduce or eliminate pump short cycling at the station to increase the useful service life of the equipment. • Upgrade the control system at PS-34. The control system upgrade would include replacement of the existing control panel with a PLC-based control panel and an OIT for improved local monitoring and control functionality. • Evaluate the remote alarm reset functionality for select remote pump station alarms. Remote reset capability will likely require additional hardwiring at the remote pump station, in addition to PLC programming and SCADA HMI screen modifications. This project is considered an opportunity project by the county and can be rescheduled if necessary.		
Impacted Stakeholders	Operation Staff I&C Technicians		
Cost Opinion*	**CAPITAL COSTS**	**%**	**COST OPINION***
	Hardware	-	-
	Software	-	-
	Integration	-	$55,000
	Administration/Quality Control	10%	$5,500
	MISC Expenses	-	-
	TOTAL CAPITAL COSTS	**-**	**$61,000**
	ANNUAL O&M COSTS	**%**	**COST OPINION***
	TOTAL ANNUAL COSTS**	**-**	**0**

*Refer to **Appendix A** for more information on the cost opinion approach. Totals and subtotals are rounded up to the nearest $1,000.

5.3 Software Projects

Project Name	**Upgrade WWTP Standalone SCADA HMI Installations to AVEVA System Platform with Managed InTouch Applications and Standardized Templates Based on HPHMI Concepts**		
Project ID	**SW-23**		
Criticality	Medium		
Facilities	▪ WWTPs		
Prerequisites	▪ None		
Duration	N/A		
Description	This project will utilize the AVEVA systems platform on the servers within the CKTP OT Network. The Sewer Utility and QCC are already in the process of converting the standalone InTouch HMI applications, which will help towards the SCADA HMI screen development and management. Once the ICS Standards (DC-27) are complete, the new standards will be implemented to the System Platform upgraded HMI screens for all WWTPs and Remote Pump Stations. The upgrades will be implemented to the already existing InTouch screens and will require graphical adjustments. Workshops will be held to determine the visual and functional requirements of the future SCADA HMI screens. During these workshops, the Sewer Utility stakeholders will be involved to confirm the final implementation meets the Sewer Utility's needs. The Project already funded and will be completed by end of FY2022.		
Impacted Stakeholders	Operation Staff I&C Technician		
Cost Opinion*	**CAPITAL COSTS**	**%**	**COST OPINION***
	Hardware	-	-
	Software	-	-
	Integration	-	$0
	Administration/Quality Control	10%	$0
	MISC Expenses	-	-
	TOTAL CAPITAL COSTS	**-**	**$0**
	ANNUAL O&M COSTS	**%**	**COST OPINION***
	TOTAL ANNUAL COSTS**	**-**	**0**

*Refer to **Appendix A** for more information on the cost opinion approach. Totals and subtotals are rounded up to the nearest $1,000.

	Implement an Alarm Management Program Based on ISA-18.2		
Project ID	**SW-24**		
Criticality	High		
Facilities	▪ WWTPs and Pump Stations		
Prerequisites	▪ NA-1, NA-4, DC-27A, DC-27B		
Duration	6 Months		
Description	This project will implement an alarm management program based on ISA-18.2. The Sewer Utility will continue developing its alarm management program in parallel with or prior to other ICS automation programming efforts. The alarm management program will address the following deficiencies: • Lots of activity from the same alarm during CKTP Wonderware Implementation. • No means of shelving nuisance alarms or alarms associated with known issues. • HMI screens do not provide alarm priority information and do not have any means to filter out alarms by priority. • Root-cause analysis and alarm suppression functionality have not been developed for HMI screens • HMI screens do not have troubleshooting text prompt or decisions tree aids to help operation staff react to alarm conditions • Alarm summary and alarm history screens at SWWTP do not automatically display current alarm information. • Monitored alarms should include PLC faults and communication errors so that Sewer Utility staff are alerted when PLCs and RIO racks are experiencing performance issues • Monitored alarms should include signal out-of-range alarms for all analog signals so that Sewer Utility staff are notified when current-based signals fall outside of the 4–20 mA range The data related to the ICS alarms will be captured in the historian or another database environment and be made available to users on the Sewer Utility Business LAN. Third-party alarm management software or dashboards will be used to develop visualizations and reports that will help manage alarms and help with responsiveness.		
Impacted Stakeholders	Operation Staff I&C Technician		
Cost Opinion*	**CAPITAL COSTS**	**%**	**COST OPINION***
	Hardware	-	-
	Software	-	-
	Integration	-	$49,500
	Administration/Quality Control	10%	$4,950
	MISC Expenses	-	-
	TOTAL CAPITAL COSTS	**-**	**$54,000**
	ANNUAL O&M COSTS	**%**	**COST OPINION***
	TOTAL ANNUAL COSTS**	**-**	**0**

***Refer to Appendix A for more information on the cost opinion approach. Totals and subtotals are rounded up to the nearest $1,000.**

Project Name	**Establish a Tiered Historian Implementation at CKTP**		
Project ID	**SW-25**		
Criticality	Medium		
Facilities	▪ CKTP		
Prerequisites	▪ NA-2, NA-7, DC-27A, DC-27B		
Duration	3 Months		
Description	This project will establish a central historian at CKTP to consolidate ICS data received from the Sewer Utility WWTPs and remote pump stations. Embedded trends would display data that have been received from the central historian. The AVEVA Historian Client software will be implemented to access the historian data and facilitate development of static and ad hoc trends from the PCs on the OT network but cost has not been included because it is not within the scope of the master plan. To prevent loss of data received from the plants during an outage, store-and-forward functionality will be implemented. A “Tier 2” historian will be established on the Sewer Utility Business LAN at CKTP to provide access to the historian data for users. The “Tier 1” Historian will push data through the DMZ to the “Tier 2” Historian and the one-way nature of this data flow and limited open port requirements will simplify industrial DMZ firewall configuration, improve OT network security controls, and significantly reduce the network traffic traversing the industrial DMZ firewall. Any additional Firewall configuration during the historian implementation in the DMZ will be managed by the County IS Department.		
Impacted Stakeholders	Operation Staff I&C Technician		
Cost Opinion*	**CAPITAL COSTS**	**%**	**COST OPINION***
	Hardware	-	-
	Software	-	$64,837
	Integration	-	$16,500
	Administration/Quality Control	10%	$8,134
	MISC Expenses	-	-
	TOTAL CAPITAL COSTS	**-**	**$89,000**
	ANNUAL O&M COSTS	**%**	**COST OPINION***
	TOTAL ANNUAL COSTS**	**-**	**$10,938**

*Refer to **Appendix A** for more information on the cost opinion approach. Totals and subtotals are rounded up to the nearest $1,000.

Project Name	**Broaden the Data Set Archived by the Sewer utility Historian to Establish Foundations for More Comprehensive Process-and Asset-level Health and Performance Monitoring**
Project ID	**SW-26**
Criticality	Medium
Facilities	▪ WWTPs and Pump Stations
Prerequisites	▪ NA-4, DC-27B, DC-28
Duration	9 Months
Description	This project will audit the parameters that are being monitored and configure the site Tier 1 historian to historize the parameters of interest.

Project Name	**Broaden the Data Set Archived by the Sewer utility Historian to Establish Foundations for More Comprehensive Process-and Asset-level Health and Performance Monitoring**		
	The project will also include the following in the historian: • In Auto Status • Close/Open Commands • Position Commands • Start/Stop Commands • Speed Commands • Set Point Commands • Energy Consumption Status • Power Data Status • Fail/Fault Alarm • Networked Equipment alarms and warnings • Actuator Torque Status • Pump Suction and Discharge Pressure Status • Liquid Stream and Solid Stream Low and Flow Totalization Status To monitor and record the above parameters, the PLC program, filed wiring, and Ethernet Device configuration will need to be investigated. No hardware costing for any required updates has been included in this cost.		
Impacted Stakeholders	Operation Staff I&C Technicians		
Cost Opinion*	**CAPITAL COSTS**	**%**	**COST OPINION***
	Hardware	-	-
	Software	-	-
	Integration	-	$68,200
	Administration/Quality Control	10%	$6,820
	MISC Expenses	-	-
	TOTAL CAPITAL COSTS	**-**	**$75,000**
	ANNUAL O&M COSTS	**%**	**COST OPINION***
	TOTAL ANNUAL COSTS**	**-**	**0**

*Refer to **Appendix A** for more information on the cost opinion approach. Totals and subtotals are rounded up to the nearest $1,000.

5.4 Documentation Projects

Project Name	**Develop ICS Standards - Hardware**		
Project ID	**DC-27A**		
Criticality	Medium		
Facilities	▪ WWTPs and Pump Stations		
Prerequisites	▪ None		
Duration	4 Months		
Description	This project will develop PLC, HMI, and control panel standards. The ICS control and telemetry panel hardware standards will include guidelines and template drawings that specify hardware component requirements; general control panel interior and exterior layouts; power distribution methodology; and fabrication, testing, and installation requirements for new ICS control and telemetry panels at Sewer Utility WWTPs and pump stations. The standards would also document network device configuration and hardening requirements for Ethernet switches, cellular gateways, and other network components to be installed within these panels. Anticipated standards to be created are: SCADA Control Panel Std SCADA Instrument and Vendor Communication Std SCADA Network Design and Hardware Std SCADA Equipment Procurement Std		
Impacted Stakeholders	Operation Staff		
Cost Opinion*	**CAPITAL COSTS**	**%**	**COST OPINION***
	Hardware	-	$5,750
	Software	-	-
	Integration	-	$129,400
	Administration/Quality Control	10%	$13,515
	MISC Expenses	-	$5,000
	TOTAL CAPITAL COSTS	**-**	**$154,000**
	ANNUAL O&M COSTS	**%**	**COST OPINION***
	TOTAL ANNUAL COSTS**	**-**	**0**

*Refer to **Appendix A** for more information on the cost opinion approach. Totals and subtotals are rounded up to the nearest $1,000.

Project Name	**Develop ICS Standards – Software and Governance**
Project ID	**DC-27B**
Criticality	Medium
Facilities	▪ WWTPs and Pump Stations
Prerequisites	▪ DC-27A
Duration	6 Months
Description	This project will develop PLC, HMI, and control panel standards. The PLC standard will include information like preferred PLC programming project file organization; appropriate level of annotation; tagging conventions; use of tag descriptions; program and routine naming conventions; use of ladder logic and function block diagram; and standard AOIs, UDTs, and subroutines that are to be used for common applications throughout the Sewer Utility ICS infrastructure.' The HMI graphics standard will include guidelines with screenshots and programming files that specify requirements and standard programming objects for graphics development and configuration work associated with AVEVA System Platform. Once the ICS Standards Documentation are created, which will contain PLC Programming standards, HMI graphics standards, and ICS control and telemetry panel hardware standards, it will be managed by a standards committee. The members of the committee will be technically qualified and be willing to participate in maintaining the standards. There will also be an ICS standards manager who will enforce the development of the standards and will oversee revising the document when necessary. The standards manager will also be responsible for maintaining version control of the document and make sure that the contractors have the most updated version available so that they may meet the requirements. With the standards being created, the Sewer Utility will establish an appropriate method for Operators to electronically log daily notes, observations, and activities. The Sewer Utility will compile relevant P&IDs from past projects into consolidated sets for each WWTP and Pump Station. Then they will be reviewed to the actual infrastructure so that the P&IDs can be updated. After the sets are compared to the current infrastructure, they will be compiled into the eO&M SharePoint site. The Sewer Utility will then develop and maintain the network architecture diagrams for the four WWTPs (physical and logical). They will also develop and maintain an asset inventory for the OT Network devices. The fiber-optic patch panel schedules and the information about the fiber-optic cables and patch panels will also be maintains. The tagging convention for the panels and cables will be standardized and noted on the ICS standard documentation. The project will utilize a software platform to implement a dashboarding and data visualization functionality for analyzing data. The project will first select a software solution and then begin developing the ability to create dashboards and visualizations in-house. Staff will need to be trained first and preliminary dashboards will need to be created. As in-house skills develop over time, the

Project Name	**Develop ICS Standards – Software and Governance**		
	dashboards and visualizations will become more technical and have more impact in process control and utility management. Once the standards are created remote access via tablets will be available for reference. Anticipated standards to be created are:		
	SCADA Application Programming Std for PLCs		
	HMI Software and Architecture Std		
	SCADA Application Programming Std for HMI		
	SCADA Data Historization and Archiving Std		
	SCADA Cybersecurity and Network Monitoring Std		
	SCADA Software Management and Revision Control Std		
	Staff Roles and Skills Development Std		
Impacted Stakeholders	Operation Staff		
Cost Opinion*	**CAPITAL COSTS**	**%**	**COST OPINION***
	Hardware	-	-
	Software	-	-
	Integration	-	$308,300
	Administration/Quality Control	10%	$30,830
	MISC Expenses	-	$5,000
	TOTAL CAPITAL COSTS	**-**	**$344,000**
	ANNUAL O&M COSTS	**%**	**COST OPINION***
	TOTAL ANNUAL COSTS**	**-**	**0**

*Refer to **Appendix A** for more information on the cost opinion approach. Totals and subtotals are rounded up to the nearest $1,000.

	Develop and Maintain Control Strategy Documentation		
Project ID	**DC-28**		
Criticality	High		
Facilities	▪ WWTPs and Pump Stations		
Prerequisites	▪ DC-27A		
Duration	18 Months		
Description	This project will develop and maintain control strategies to document how WWTP, pump station process, and equipment are controlled locally and with SCADA. The control strategies will be used to evaluate performance based on data that has been obtained through SCADA. Once the control strategy document is created, the document will be available on the County electronic operation and maintenance SharePoint site for the Sewer utility Staff. The control strategy will be updated and managed so that it remains current and accurate.		
Impacted Stakeholders	Operation Staff		
Cost Opinion*	**CAPITAL COSTS**	**%**	**COST OPINION***
	Hardware	-	-
	Software	-	-
	Integration	-	$151,800
	Administration/Quality Control	10%	$15,180
	MISC Expenses	-	-
	TOTAL CAPITAL COSTS	**-**	**$167,000**
	ANNUAL O&M COSTS	**%**	**COST OPINION***
	TOTAL ANNUAL COSTS**	**-**	**0**

*Refer to **Appendix A** for more information on the cost opinion approach. Totals and subtotals are rounded up to the nearest $1,000.

5.5 Other Software Package Projects

	Complete Hach WIMS Implementation and Establish Data Exchange with AVEVA System Platform		
Project ID	**OS-29**		
Criticality	Low		
Facilities	▪ CKTP		
Prerequisites	▪ NA-4, NA-7, SW-25, DC-27A, DC-27B, OS-30		
Duration	3 Months		
Description	This project will use Hach WIMS for its laboratory information management system (LIMS) software. The Sewer utility will have its current SCADA system automatically import data into the new Hach WIMS. Once the exchange between Hach WIMS and the Sewer utility Historian is established, the staff will have the ability to select specific SCADA tags and date ranges for ad hoc data imports and trend analysis within Hach WIMS. The sever that the Hach WIMS software will be located is on the business LAN and will be configured with the “Tier 2” historian. In the meantime, the Hach WIMS server will be deployed on the CKTP OT network while the Industrial DMZ is being implemented. The Project is considered an opportunity project by the county and can be rescheduled if necessary.		
Impacted Stakeholders	Operation Staff I&C Technicians		
Cost Opinion*	**CAPITAL COSTS**	**%**	**COST OPINION***
	Hardware	-	-
	Software	-	-
	Integration	-	$5,000
	Administration/Quality Control	10%	-
	MISC Expenses	-	-
	TOTAL CAPITAL COSTS	**-**	**$5,000**
	ANNUAL O&M COSTS	**%**	**COST OPINION***
	TOTAL ANNUAL COSTS**	**-**	**0**

*Refer to **Appendix A** for more information on the cost opinion approach. Totals and subtotals are rounded up to the nearest $1,000.

	Complete Asset Creation and Data Entry Required for LLumin Implementation, Establish Automatic Importing of Asset Runtimes, and Develop a Plan for Automating Work Order Generation		
Project ID	**OS-30**		
Criticality	Low		
Facilities	▪ CKTP		
Prerequisites	▪ NA-4, NA-7, HW-21 SW-25, DC-27A, DC-27B		
Duration	6 Months		
Description	Once the Sewer Utility completes some configurations and data entry work for the assets, this project will establish automatic importing of asset runtimes from the Sewer Utility Historian. The Sewer Utility will be configured with the "Tier 2" historian within the business LAN. The LLumin Machine Interface Server will be implemented as an on-premise solution, running as a Windows service. The project will utilize the software's ability to support asset specific, rule-based generation of work orders to identify asset runtime thresholds, alarms, events, and analog set points that trigger a work order within the LLumin system. Initially, a small sample of assets will be implemented first to see the efficacy of the work order automation. Once favorable results are seen, the project will develop a schedule to implement this system to the remainder assets. If alarm or event based work order generation on a near-real-time basis is required, The LLumin's Machine Interface server software will need to communicate with AVEVA System Platform. To do this, the project will need to relocate the LLumin Machine Interface Server software to the CKTP OT Network or industrial DMZ. First, the Sewer utility will start with the data exchange between LLumin and the "Tier 2" historian and then expand the LLumin system after the Sewer utility's CMMS program is developed. The County IS Department will install, develop, and maintain the Llumin software so no license costs have been included. Cartagraph will also be integrated with the implementation of this project. This project is considered an opportunity project by the county and can be rescheduled if necessary.		
Impacted Stakeholders	Operation Staff I&C Technicians		
Cost Opinion*	**CAPITAL COSTS**	**%**	**COST OPINION***
	Hardware	-	-
	Software	-	-
	Integration	-	$352,000
	Administration/Quality Control	10%	$35,200
	MISC Expenses	-	-
	TOTAL CAPITAL COSTS	**-**	**$387,000**
	ANNUAL O&M COSTS	**%**	**COST OPINION***
	TOTAL ANNUAL COSTS**	**-**	**-**

*Refer to **Appendix A** for more information on the cost opinion approach. Totals and subtotals are rounded up to the nearest $1,000.

	Begin Leveraging the Sewer Utility's Power and Energy Data		
Project ID	**OS-31**		
Criticality	Low		
Facilities	▪ WWTPs and Pump Stations		
Prerequisites	▪ NA-4, SW-23, DC-27A, DC-27B		
Duration	3 Months		
Description	This project will begin recording historical power and energy data from installed power monitors and network-capable motor controllers. This will require the install of network cabling to establish communication with the power monitors. For the Ethernet-capable power monitors that are not communicating with the PLC, communication will have to established between the power monitors and the AVEVA SCADA software. This information will be used to evaluate the existing infrastructure's capacity to accept additional electrical loads and to assess when harmonic distortion is approaching unacceptable levels. The Sewer Utility will transition away from the existing GE Enervista Viewpoint Monitoring software in the CKTP SPB control room and utilize the AVEVA System Platform to monitor and record the Sewer Utility's power and energy data. The project will install Ethernet-capable power monitors at all major electrical distribution buses as the equipment is replaced/upgraded in the future and has not been included in the cost. When installing future motor controllers, the Sewer Utility will make sure that they will be provided with Ethernet communication so that power and energy data can be monitored and recorded. When determining energy-based metrics the Sewer utility will use KPIs for evaluating its operations and then leverage KPIs to establish baselines at each of its WWTPs and remote pump stations. The baselines will be established from 1 years' worth of data to account for seasonal variation. The project will utilize data analytics and visualization software to track and monitor energy-based KPIs. Once sufficient baseline energy data is provided, they will be reviewed to identify processes and equipment where energy efficiency measures are likely to yield benefits. A formal energy audit will take place and then targeted goals will be set as part of a separate project.		
Impacted Stakeholders	Operation Staff I&C Technicians		
Cost Opinion*	**CAPITAL COSTS**	**%**	**COST OPINION***
	Hardware	-	-
	Software	-	-
	Integration	-	$18,700
	Administration/Quality Control	10%	$1,870
	MISC Expenses	-	-
	TOTAL CAPITAL COSTS	**-**	**$21,000**
	ANNUAL O&M COSTS	**%**	**COST OPINION***
	TOTAL ANNUAL COSTS**	**-**	**0**

*Refer to **Appendix A** for more information on the cost opinion approach. Totals and subtotals are rounded up to the nearest $1,000.

This page intentionally left blank.

A

Appendix A – Cost Estimate

This page intentionally left blank.

NA-1				
Upgrade Central Kitsap Treatment Plant (CKTP) Control Room				
Hardware Items	**Qty**	**Unit Prices**	**Extended**	
	0	$ -	$ -	
Hardware Subtotal			$ -	
Software Items				
	0	$ -	$ -	
Software Subtotal			$ -	
Totals	0	$ -	$ -	
Installation/ Configuration	**Qty**	**Unit Price**	**Extended**	
Sewer Utility will handle internally	1	$ 5,000	$ 5,000	
Subtotal Configuration, Programming and Startup				*$ 5,000*
Contingency			10%	
Total Configuration, Programming and Startup				
Subtotal Hardware Costs				*$ -*
Contingency			*15%*	*$ -*
Hardware Total				***$ -***
Subtotal Software Costs				*$ -*
Contingency			*15%*	*$ -*
Software Total				***$ -***
Total Hardware and Software Costs				***$ -***
Admin/QC			10%	$ -
Misc Expenses				
Total				***$ -***

NA-2

Extend OT Network to County Public Works Annex Facility

Hardware Items	**Qty**	**Unit Prices**	**Extended**
Workstations (Testing)	1	$ 5,000	$ 5,000
Large Screen Monitors (Training)	2	$ 2,000	$ 4,000
HIP Switch	1	$ 10,000	$ 10,000
Hardware Subtotal			$ 19,000
Software Items			
Lic: Workstations (1)	1	$ 15,000	$ 15,000
Software Subtotal			$ 15,000
Totals	5	$ 32,000	$ 34,000

Installation/ Configuration	**Qty**	**Unit Price**	**Extended**
HMI/Historian	1	$ 10,000	$ 10,000
Firewall Installation / Configuration	1	$ 5,000	$ 5,000
Workstation Installation / Configuration	1	$ 10,000	$ 10,000

Subtotal Configuration, Programming and Startup		*$ 25,000*
Contingency	*10%*	*$ 2,500*
Total Configuration, Programming and Startup		***$ 27,500***
Subtotal Hardware Costs		*$ 19,000*
Contingency	*15%*	*$ 2,850*
Hardware Total		***$ 21,850***
Subtotal Software Costs		*$ 15,000*
Contingency	*15%*	*$ 2,250*
Software Total		***$ 17,250***
Total Hardware and Software Costs		**$ 39,100**

Admin/QC	10%	$ 6,660
Misc Expenses		$ 5,000
Total		**$ 78,000**

NA-3

Remote Pump Station and WWTP Telemetry Improvements

Hardware Items	**Qty**	**Unit Prices**	**Extended**
Cellular Router for Verizon	2	$ 500	$ 1,000
Server	1	$ 15,000	$ 15,000
Switch	1	$ 10,000	$ 10,000
Hardware Subtotal			$ 26,000
Software Items			
Lic: AVEVA Telemetry Server Software	1	$ 8,500	$ 8,500
Software Subtotal			$ 8,500
Totals	5	$ 34,000	$ 34,500

Installation/ Configuration	**Qty**	**Unit Price**	**Extended**
Server Installation / Configuration	1	$ 10,000	$ 10,000
Firewall Installation / Configuration	2	$ 5,000	$ 10,000
Cellular Radio Configuration and Testing	61	$ 2,000	$ 122,000
HMI/Historian	1	$ 10,000	$ 10,000
PLC Programing	1	$ 6,000	$ 6,000
Cellular Site Survey	1	$ 20,000	$ 20,000

Subtotal Configuration, Programming and Startup		*$ 178,000*
Contingency	*10%*	*$ 17,800*
Total Configuration, Programming and Startup		***$ 195,800***
Subtotal Hardware Costs		*$ 26,000*
Contingency	*15%*	*$ 3,900*
Hardware Total		***$ 29,900***
Subtotal Software Costs		*$ 8,500*
Contingency	*15%*	*$ 1,275*
Software Total		***$ 9,775***
Total Hardware and Software Costs		**$ 39,675**

Admin/QC	10%	$ 23,548
Misc Expenses		$ 5,000
Total		**$ 264,000**

Annual AVEVA Telemetry Server Support Cost $1,600

# of pump stations

NA-4

CKTP OT Network Upgrades

Hardware Items	**Qty**	**Unit Prices**	**Extended**
Network Rack	1	$ 15,000	$ 15,000
Switch (Managed)	3	$ 15,000	$ 45,000
UPS	1	$ 4,000	$ 4,000
SFP Module	1	$ 2,000	$ 2,000
Hardware Subtotal			$ 66,000
Software Items			
Software Subtotal			$ -
Totals	6	$ 36,000	$ 15,000

Installation/ Configuration	**Qty**	**Unit Price**	**Extended**
Switch Installation / Configuration	3	$ 2,000	$ 6,000
Fiber Installation	1	$ 66,500	$ 66,500
OT Network Device Communication updates	1	$ 30,000	$ 30,000

Subtotal Configuration, Programming and Startup		*$*	*102,500*
Contingency	*10%*	*$*	*10,300*
Total Configuration, Programming and Startup		***$***	***112,800***
Subtotal Hardware Costs		*$*	*66,000*
Contingency	*15%*	*$*	*9,900*
Hardware Total		***$***	***75,900***
Subtotal Software Costs		*$*	-
Contingency	*15%*	*$*	-
Software Total		***$***	**-**
Total Hardware and Software Costs		**$**	**75,900**
Admin/QC	10%	$	18,870
Misc Expenses		$	5,000
Total		**$**	**213,000**

Fiber $18.00 per foot without conduit or interduct or $33.25 with conduit.
Cost is including 2,000 feet for Fiber with Conduit

NA-5				
Standardization to Managed Switches				
Hardware Items	**Qty**	**Unit Prices**	**Extended**	
Switch (Managed)	5	$ 6,000	$	30,000
Hardware Subtotal			$	30,000
Software Items				
Software Subtotal			$	-
Totals	5	$ 6,000	$	30,000

Installation/ Configuration	**Qty**	**Unit Price**	**Extended**	
Fiber Installation	1	$ 66,500	$	66,500
Switch Installation / Configuration	5	$ 2,000	$	10,000

Subtotal Configuration, Programming and Startup		*$*	*76,500*
Contingency	*10%*	*$*	*7,700*
Total Configuration, Programming and Startup		***$***	***84,200***
Subtotal Hardware Costs		*$*	*30,000*
Contingency	*15%*	*$*	*4,500*
Hardware Total		***$***	***34,500***
Subtotal Software Costs		*$*	*-*
Contingency	*15%*	*$*	*-*
Software Total		***$***	***-***
Total Hardware and Software Costs		**$**	**34,500**

Admin/QC	10%	$	11,870
Misc Expenses		$	5,000
Total		**$**	**136,000**

Fiber $18.00 per foot without conduit or interduct or $33.25 with conduit.
Cost is including 2,000 feet for Fiber with Conduit

NA-6

ICS and OT Network Power Supply Improvements

Hardware Items	**Qty**	**Unit Prices**	**Extended**
UPS Compact Tower	51	$ 1,000	$ 51,000
Hardware Subtotal			$ 51,000
Software Items			
Software Subtotal			$ -
Totals	51	$ 1,000	$ 51,000

Installation/ Configuration	**Qty**	**Unit Price**	**Extended**
PLC Programing	1	$ 8,000	$ 8,000
HMI Configuration	1	$ 10,000	$ 10,000
UPS Install	51	$ 1,000	$ 51,000

Subtotal Configuration, Programming and Startup		*$*	*69,000*
Contingency	*10%*	*$*	*6,900*
Total Configuration, Programming and Startup		***$***	***75,900***
Subtotal Hardware Costs		*$*	*51,000*
Contingency	*15%*	*$*	*7,650*
Hardware Total		***$***	***58,650***
Subtotal Software Costs		*$*	-
Contingency	*15%*	*$*	-
Software Total		***$***	**-**
Total Hardware and Software Costs		**$**	**58,650**

Admin/QC	10%	$	13,455
Misc Expenses		$	5,000
Total		**$**	**153,000**

NA-7

DMZ and AVEVA InTouch Access Anywhere Implementation

Hardware Items	**Qty**	**Unit Prices**	**Extended**
Server	1	$ 15,000	$ 15,000
Hardware Subtotal			$ 15,000
Software Items			
	1	$ -	$ -
Software Subtotal			$ -
Totals	2	$ 15,000	$ 15,000

Installation/ Configuration	**Qty**	**Unit Price**	**Extended**
Server Installation / Configuration	1	$ 20,000	$ 20,000
AVEVA InTouch Access Anywhere Configuration	1	$ 5,000	$ 5,000
Coordination with County IS Department	1	$ 18,000	$ 18,000

Subtotal Configuration, Programming and Startup		*$*	*43,000*
Contingency	*10%*	*$*	*4,300*
Total Configuration, Programming and Startup		***$***	***47,300***
Subtotal Hardware Costs		*$*	*15,000*
Contingency	*15%*	*$*	*2,250*
Hardware Total		***$***	***17,250***
Subtotal Software Costs		*$*	*-*
Contingency	*15%*	*$*	*-*
Software Total		***$***	***-***
Total Hardware and Software Costs		**$**	**17,250**
Admin/QC	10%	$	6,455
Misc Expenses		$	5,000
Total		**$**	**76,000**

3 weeks * $150 per hour

HW-8

Establish Sewer Utility PLC/OIT Platform Standard and Schedule Replacement of Select WWTP and Remote Pump Station PLCs/OITs

Hardware Items	**Qty**	**Unit Prices**	**Extended**
	0	$ -	$ -
Hardware Subtotal			$ -
Software Items			
	0	$ -	$ -
Software Subtotal			$ -
Totals	0	$ -	$ -

Installation/ Configuration	**Qty**	**Unit Price**	**Extended**
Prioritize PLCs and OITs for End of Life Replacement (will handled internally)	1	$ 5,000	$ 5,000

Subtotal Configuration, Programming and Startup		*$*	*5,000*
Contingency	10%		
Total Configuration, Programming and Startup			
Subtotal Hardware Costs		*$*	-
Contingency	*15%*	*$*	-
Hardware Total		***$***	**-**
Subtotal Software Costs		*$*	-
Contingency	*15%*	*$*	-
Software Total		***$***	**-**
Total Hardware and Software Costs		***$***	**-**

Admin/QC	10%	$	-
Misc Expenses			
Total		***$***	**-**

HW-9

Replace CKTP MCC DeviceNet Networks w/ Ethernet Capable Motor Controllers

Hardware Items	**Qty**	**Unit Prices**	**Extended**
Ethernet/IP Adapter/Module	19	$ 1,000	$ 19,000
E300 Electronic Overlay Relays	4	$ 1,000	$ 4,000
Miscelaneous PLC I/O Module	1	$ 20,000	$ 20,000
Hardware Subtotal			$ 43,000
Software Items			
Software Subtotal			$ -
Totals	24	$ 22,000	$ 43,000

Installation/ Configuration	**Qty**	**Unit Price**	**Extended**
PLC Programing	1	$ 6,000	$ 6,000
Communication Module Retrofit	23	$ 500	$ 11,500
EtherNet Wiring Allowance	23	$ 500	$ 11,500

Subtotal Configuration, Programming and Startup		*$*	*29,000*
Contingency	*10%*	*$*	*2,900*
Total Configuration, Programming and Startup		***$***	***31,900***
Subtotal Hardware Costs		*$*	*43,000*
Contingency	*15%*	*$*	*6,450*
Hardware Total		***$***	***49,450***
Subtotal Software Costs		*$*	-
Contingency	*15%*	*$*	-
Software Total		***$***	**-**
Total Hardware and Software Costs		**$**	**49,450**

Admin/QC	10%	$	8,135
Misc Expenses		$	5,000
Total		**$**	**94,000**

HW-10				
Develop a Formal Instrument Calibration and Maintenance Program				
Hardware Items	**Qty**	**Unit Prices**	**Extended**	
	0	$ -	$ -	
Hardware Subtotal			$ -	
Software Items				
	0	$ -	$ -	
Software Subtotal			$ -	
Totals	0	$ -	$ -	
Installation/ Configuration	**Qty**	**Unit Price**	**Extended**	
Creation of Program for Maintenance and Calibration (will handle internally)	1	$ 5,000	$ 5,000	
Subtotal Configuration, Programming and Startup				*$ 5,000*
Contingency			10%	
Total Configuration, Programming and Startup				
Subtotal Hardware Costs				*$ -*
Contingency			*15%*	*$ -*
Hardware Total				***$ -***
Subtotal Software Costs				*$ -*
Contingency			*15%*	*$ -*
Software Total				***$ -***
Total Hardware and Software Costs				***$ -***
Admin/QC			10%	$ -
Misc Expenses				$ -
Total				***$ -***

HW-11

CKTP Digester Building PNL 6000 and MCC Replacement

Hardware Items	**Qty**	**Unit Prices**	**Extended**
PLC Panel	$ 1	$ 50,000	$ 50,000
Hardware Subtotal			$ 50,000
Software Items			
Software Subtotal			$ -
Totals	1	$ 50,000	$ 50,000

Installation/ Configuration	**Qty**	**Unit Price**	**Extended**
Miscellaneous Field Wiring	1	$ 10,000	$ 10,000

Subtotal Configuration, Programming and Startup		*$*	*10,000*
Contingency	*10%*	*$*	*1,000*
Total Configuration, Programming and Startup		***$***	***11,000***
Subtotal Hardware Costs		*$*	*50,000*
Contingency	*15%*	*$*	*7,500*
Hardware Total		***$***	***57,500***
Subtotal Software Costs		*$*	-
Contingency	*15%*	*$*	-
Software Total		***$***	**-**
Total Hardware and Software Costs		**$**	**57,500**

Admin/QC	10%	$	6,850
Misc Expenses		$	5,000
Total		**$**	**80,000**

HW-12				
Include Integration of Composite Sampler Alarms and Monitoring with Replacement of Existing Samplers				
Hardware Items	**Qty**	**Unit Prices**	**Extended**	
	0	$ -	$ -	
Hardware Subtotal			$ -	
Software Items				
	0	$ -	$ -	
Software Subtotal			$ -	
Totals	0	$ -	$ -	
Installation/ Configuration	**Qty**	**Unit Price**	**Extended**	
Sewer Utility will handle internally	1	$ 5,000	$ 5,000	
Subtotal Configuration, Programming and Startup				*$ 5,000*
Contingency			10%	
Total Configuration, Programming and Startup				
Subtotal Hardware Costs				*$ -*
Contingency			*15%*	*$ -*
Hardware Total				***$ -***
Subtotal Software Costs				*$ -*
Contingency			*15%*	*$ -*
Software Total				***$ -***
Total Hardware and Software Costs				***$ -***
Admin/QC			10%	$ -
Misc Expenses				
Total				***$ -***

HW-13

Implement CKTP Instrumentation Improvements

Hardware Items	**Qty**	**Unit Prices**	**Extended**
Flowmeter 4" Pipe(Magmeter)	2	$ 3,500	$ 7,000
Flowmeter 6" Pipe(Magmeter)	5	$ 4,000	$ 20,000
Flowmeter 8" Pipe(Magmeter)	2	$ 4,500	$ 9,000
Thermal Dispersion Flowmeter	1	$ 2,500	$ 2,500
Chlorine Residual Analyzer	1	$ 2,500	$ 2,500
Turbidity Analyzer	1	$ 3,000	$ 3,000
Lower Explosive Limit Transmitter	1	$ 5,000	$ 5,000
Suspended Solids Probe	2	$ 8,000	$ 16,000
Hardware Subtotal			$ 65,000
Software Items			
Software Subtotal			$ -
Totals	15	$ 33,000	$ 65,000

Installation/ Configuration	**Qty**	**Unit Price**	**Extended**
Installation of instruments	13	$ 5,000	$ 65,000
PLC Programming	1	$ 10,000	$ 10,000
HMI Configuration	1	$ 5,000	$ 5,000

Subtotal Configuration, Programming and Startup		*$*	*80,000*
Contingency	*10%*	*$*	*8,000*
Total Configuration, Programming and Startup		***$***	***88,000***
Subtotal Hardware Costs		*$*	*65,000*
Contingency	*15%*	*$*	*9,750*
Hardware Total		***$***	***74,750***
Subtotal Software Costs		*$*	-
Contingency	*15%*	*$*	-
Software Total		***$***	**-**
Total Hardware and Software Costs		**$**	**74,750**
Admin/QC	10%	$	16,275
Misc Expenses		$	5,000
Total		**$**	**184,000**

HW-14

Implement CKTP Automation Improvements

Hardware Items	**Qty**	**Unit Prices**	**Extended**
PLC Panel	1	$ 50,000	$ 50,000
Associated Odor Control Instrumentation	1	$ 25,000	$ 25,000
Low Level Switch	1	$ 500	$ 500
Hardware Subtotal			$ 75,500
Software Items			
Software Subtotal			$ -
Totals	3	$ 75,500	$ 75,500

Installation/ Configuration	**Qty**	**Unit Price**	**Extended**
PLC Programing	2	$ 12,000	$ 24,000
HMI Configuration	4	$ 5,000	$ 20,000

Subtotal Configuration, Programming and Startup		*$*	*44,000*
Contingency	*10%*	*$*	*4,400*
Total Configuration, Programming and Startup		***$***	***48,400***
Subtotal Hardware Costs		*$*	*75,500*
Contingency	*15%*	*$*	*11,325*
Hardware Total		***$***	***86,825***
Subtotal Software Costs		*$*	*-*
Contingency	*15%*	*$*	*-*
Software Total		***$***	***-***
Total Hardware and Software Costs		**$**	**86,825**

Admin/QC	10%	$	13,523
Misc Expenses		$	5,000
Total		**$**	**154,000**

HW-15

Implement KWWTP Instrumentation Improvements

Hardware Items	**Qty**	**Unit Prices**	**Extended**
Flowmeter 2" Pipe(Magmeter)	2	$ 2,500	$ 5,000
Flowmeter 3" Pipe(Magmeter)	1	$ 3,000	$ 3,000
Flowmeter 4" Pipe(Magmeter)	1	$ 3,500	$ 3,500
Flowmeter 6" Pipe(Magmeter)	1	$ 4,000	$ 4,000
Suspended Solids Probe	2	$ 8,000	$ 16,000
Hardware Subtotal			$ 31,500
Software Items			
Software Subtotal			$ -
Totals	7	$ 21,000	$ 31,500

Installation/ Configuration	**Qty**	**Unit Price**	**Extended**
Installation of instruments	7	$ 5,000	$ 35,000
PLC Programming	1	$ 10,000	$ 10,000
HMI Configuration	1	$ 5,000	$ 5,000

Subtotal Configuration, Programming and Startup		*$*	*50,000*
Contingency	*10%*	*$*	*5,000*
Total Configuration, Programming and Startup		***$***	***55,000***
Subtotal Hardware Costs		*$*	*31,500*
Contingency	*15%*	*$*	*4,725*
Hardware Total		***$***	***36,225***
Subtotal Software Costs		*$*	*-*
Contingency	*15%*	*$*	*-*
Software Total		***$***	***-***
Total Hardware and Software Costs		**$**	**36,225**
Admin/QC	10%	$	9,123
Misc Expenses		$	5,000
Total		**$**	**105,000**

HW-16

Implement KWWTP Automation Improvements

Hardware Items	**Qty**	**Unit Prices**	**Extended**
	0	$ -	$ -
Hardware Subtotal			$ -
Software Items			
Software Subtotal			$ -
Totals	0	$ -	$ -

Installation/ Configuration	**Qty**	**Unit Price**	**Extended**
PLC Programing	2	$ 6,000	$ 12,000
HMI Configuration	4	$ 5,000	$ 20,000

Subtotal Configuration, Programming and Startup		*$*	*32,000*
Contingency	10%	*$*	*3,200*
Total Configuration, Programming and Startup		***$***	***35,200***
Subtotal Hardware Costs		*$*	-
Contingency	*15%*	*$*	-
Hardware Total		***$***	**-**
Subtotal Software Costs		*$*	-
Contingency	*15%*	*$*	-
Software Total		***$***	**-**
Total Hardware and Software Costs		***$***	**-**

Admin/QC	10%	$	3,520
Misc Expenses			
Total		**$**	**39,000**

HW-17

Implement MWWTP Instrumentation Improvements

Hardware Items	**Qty**	**Unit Prices**	**Extended**
Flowmeter 2" Pipe(Magmeter)	1	$ 2,500	$ 2,500
Flowmeter 3" Pipe(Magmeter)	4	$ 3,000	$ 12,000
Flowmeter 4" Pipe(Magmeter)	1	$ 3,500	$ 3,500
Flowmeter 6" Pipe(Magmeter)	1	$ 4,000	$ 4,000
Level Transmitter	1	$ 3,000	$ 3,000
Lower Explosive Limit Transmitter	3	$ 5,000	$ 15,000
Suspended Solids Probe	2	$ 8,000	$ 16,000
Hardware Subtotal			$ 56,000
Software Items			
Software Subtotal			$ -
Totals	13	$ 29,000	$ 56,000

Installation/ Configuration	**Qty**	**Unit Price**	**Extended**
Installation of instruments	13	$ 5,000	$ 65,000
PLC Programming	1	$ 10,000	$ 10,000
HMI Configuration	1	$ 5,000	$ 5,000

Subtotal Configuration, Programming and Startup		*$*	*80,000*
Contingency	*10%*	*$*	*8,000*
Total Configuration, Programming and Startup		***$***	***88,000***
Subtotal Hardware Costs		*$*	*56,000*
Contingency	*15%*	*$*	*8,400*
Hardware Total		***$***	***64,400***
Subtotal Software Costs		*$*	*-*
Contingency	*15%*	*$*	*-*
Software Total		***$***	***-***
Total Hardware and Software Costs		**$**	**64,400**
Admin/QC	10%	$	15,240
Misc Expenses		$	5,000
Total		**$**	**173,000**

HW-18

Implement MWWTP Automation Improvements

Hardware Items	**Qty**	**Unit Prices**	**Extended**
	0	$ -	$ -
Hardware Subtotal			$ -
Software Items			
Software Subtotal			$ -
Totals	0	$ -	$ -

Installation/ Configuration	**Qty**	**Unit Price**	**Extended**
PLC Programing	4	$ 6,000	$ 24,000
HMI Configuration	4	$ 5,000	$ 20,000
Wiring a Fault Signal from Starter to IO panel	1	$ 500	$ 500

Subtotal Configuration, Programming and Startup		*$*	*44,500*
Contingency	10%	*$*	*4,500*
Total Configuration, Programming and Startup		***$***	***49,000***
Subtotal Hardware Costs		*$*	-
Contingency	*15%*	*$*	-
Hardware Total		***$***	**-**
Subtotal Software Costs		*$*	-
Contingency	*15%*	*$*	-
Software Total		***$***	**-**
Total Hardware and Software Costs		**$**	**-**
Admin/QC	10%	$	4,900
Misc Expenses			
Total		**$**	**54,000**

HW-19

Implement SWWTP Instrumentation Improvements

Hardware Items	**Qty**	**Unit Prices**	**Extended**
Flowmeter 3" Pipe(Magmeter)	2	$ 3,000	$ 6,000
Flowmeter 6" Pipe(Magmeter)	1	$ 4,000	$ 4,000
Level Transmitter	1	$ 3,000	$ 3,000
Lower Explosive Limit Transmitter	1	$ 5,000	$ 5,000
Suspended Solids Probe	2	$ 8,000	$ 16,000
DO Probes	2	$ 2,000	$ 4,000
Hardware Subtotal			$ 38,000
Software Items			
Software Subtotal			$ -
Totals	9	$ 25,000	$ 38,000

Installation/ Configuration	**Qty**	**Unit Price**	**Extended**
Installation of instruments	9	$ 5,000	$ 45,000
PLC Programming	1	$ 10,000	$ 10,000
HMI Configuration	1	$ 5,000	$ 5,000

Subtotal Configuration, Programming and Startup		*$ 60,000*
Contingency	*10%*	*$ 6,000*
Total Configuration, Programming and Startup		***$ 66,000***
Subtotal Hardware Costs		*$ 38,000*
Contingency	*15%*	*$ 5,700*
Hardware Total		***$ 43,700***
Subtotal Software Costs		*$ -*
Contingency	*15%*	*$ -*
Software Total		***$ -***
Total Hardware and Software Costs		**$ 43,700**

Admin/QC	10%	$ 10,970
Misc Expenses		$ 5,000
Total		**$ 126,000**

HW-20			
Implement SWWTP Automation Improvements			
Hardware Items	**Qty**	**Unit Prices**	**Extended**
	0	$ -	$ -
Hardware Subtotal			$ -
Software Items			
Software Subtotal			$ -
Totals	0	$ -	$ -

Installation/ Configuration	**Qty**	**Unit Price**	**Extended**
PLC Programing	4	$ 6,000	$ 24,000
HMI Configuration	2	$ 5,000	$ 10,000
High Discharge Pressure Troubleshooting	1	$ 6,000	$ 6,000

Subtotal Configuration, Programming and Startup		*$*	*40,000*
Contingency	10%	*$*	*4,000*
Total Configuration, Programming and Startup		***$***	***44,000***
Subtotal Hardware Costs		*$*	-
Contingency	*15%*	*$*	-
Hardware Total		***$***	**-**
Subtotal Software Costs		*$*	-
Contingency	*15%*	*$*	-
Software Total		***$***	**-**
Total Hardware and Software Costs		**$**	**-**
Admin/QC	10%	$	4,400
Misc Expenses			
Total		**$**	**48,000**

HW-21

Implement Remote Pump Station Instrumentation Improvements

Hardware Items	**Qty**	**Unit Prices**	**Extended**
Pressure Transmitter	12	$ 3,600	$ 43,200
Level Transmitter	2	$ 3,000	$ 6,000
Level Transducer	1	$ 1,000	$ 1,000
Lower Explosive Limit Transmitter	2	$ 5,000	$ 10,000
Hardware Subtotal			$ 60,200
Software Items			
Software Subtotal			$ -
Totals	17	$ 12,600	$ 60,200

Installation/ Configuration	**Qty**	**Unit Price**	**Extended**
Installation of instruments	17	$ 5,000	$ 85,000
PLC Programming	1	$ 10,000	$ 10,000
HMI Configuration	1	$ 5,000	$ 5,000

Subtotal Configuration, Programming and Startup		*$*	*100,000*
Contingency	*10%*	*$*	*10,000*
Total Configuration, Programming and Startup		***$***	***110,000***
Subtotal Hardware Costs		*$*	*60,200*
Contingency	*15%*	*$*	*9,030*
Hardware Total		***$***	***69,230***
Subtotal Software Costs		*$*	-
Contingency	*15%*	*$*	-
Software Total		***$***	**-**
Total Hardware and Software Costs		**$**	**69,230**
Admin/QC	10%	$	17,923
Misc Expenses		$	5,000
Total		**$**	**202,000**

HW-22

Implement Remote Pump Station Automation Improvements

Hardware Items	**Qty**	**Unit Prices**	**Extended**
	0	$ -	$ -
Hardware Subtotal			$ -
Software Items			
Software Subtotal			$ -
Totals	0	$ -	$ -

Installation/ Configuration	**Qty**	**Unit Price**	**Extended**
PLC Programing	5	$ 6,000	$ 30,000
HMI Configuration	4	$ 5,000	$ 20,000

Subtotal Configuration, Programming and Startup		*$*	*50,000*
Contingency	*10%*	*$*	*5,000*
Total Configuration, Programming and Startup		***$***	***55,000***
Subtotal Hardware Costs		*$*	-
Contingency	*15%*	*$*	-
Hardware Total		***$***	**-**
Subtotal Software Costs		*$*	-
Contingency	*15%*	*$*	-
Software Total		***$***	**-**
Total Hardware and Software Costs		**$**	**-**
Admin/QC	10%	$	5,500
Misc Expenses			
Subtotal		**$**	**61,000**

SW-23

Upgrade WWTP Standalone SCADA HMI Installations to AVEVA System Platform with Managed InTouch Applications and Standardized Templates Based on HPHMI Concepts

Hardware Items	**Qty**	**Unit Prices**	**Extended**
	0	$ -	$ -
Hardware Subtotal			$ -
Software Items			
	0	$ -	$ -
Software Subtotal			$ -
Totals	0	$ -	$ -

Installation/ Configuration	**Qty**	**Unit Price**	**Extended**
Subtotal Configuration, Programming and Startup			$ -
Contingency		10%	
Total Configuration, Programming and Startup			
Subtotal Hardware Costs			$ -
Contingency		*15%*	$ -
Hardware Total			**$ -**
Subtotal Software Costs			$ -
Contingency		*15%*	$ -
Software Total			**$ -**
Total Hardware and Software Costs			**$ -**

Admin/QC	10%	$ -
Misc Expenses		
Funded and in Progress	***Total***	**$ -**

WWTP = 1 PLC/week *150
REMOTE = 4 PLC/week *150

SW-24

Implement an Alarm Management Program Based on ISA-18.2

Hardware Items	**Qty**	**Unit Prices**	**Extended**
	0	$ -	$ -
Hardware Subtotal			$ -
Software Items			
	0	$ -	$ -
Software Subtotal			$ -
Totals	0	$ -	$ -

Installation/ Configuration	**Qty**	**Unit Price**	**Extended**
Workshops to Review Current Alarm Classifications	1	$ 5,000	$ 5,000
HMI/Historian Configuration	1	$ 40,000	$ 40,000

Subtotal Configuration, Programming and Startup		*$*	*45,000*
Contingency	10%	*$*	*4,500*
Total Configuration, Programming and Startup		***$***	***49,500***
Subtotal Hardware Costs		*$*	-
Contingency	*15%*	*$*	-
Hardware Total		***$***	**-**
Subtotal Software Costs		*$*	-
Contingency	*15%*	*$*	-
Software Total		***$***	**-**
Total Hardware and Software Costs		***$***	**-**

Admin/QC	10%	$	4,950
Misc Expenses			
Total		***$***	**54,000**

SW-25

Establish a Tiered Historian Implementation at CKTP

Hardware Items	**Qty**	**Unit Prices**	**Extended**
	0	$ -	$ -
Hardware Subtotal			$ -
Software Items			
Enterprise Historian License (25,000 tags)	1	$ 53,000	$ 53,000
2 Additional Historian Web Client License	2	$ 1,690	$ 3,380
Software Subtotal			$ 56,380
Totals	1	$ 53,000	$ 56,380

Installation/ Configuration	**Qty**	**Unit Price**	**Extended**		
Workshops to determine data to go to Tier 2 Historian	1	$ 5,000	$ 5,000		
Historian Configuration	1	$ 10,000	$ 10,000		
Subtotal Configuration, Programming and Startup				*$*	*15,000*
Contingency			*10%*	*$*	*1,500*
Total Configuration, Programming and Startup				***$***	***16,500***
Subtotal Hardware Costs				*$*	-
Contingency			*15%*	*$*	-
Hardware Total				***$***	**-**
Subtotal Software Costs				*$*	*56,380*
Contingency			*15%*	*$*	*8,457*
Software Total				***$***	***64,837***
Total Hardware and Software Costs				**$**	**64,837**

Admin/QC	10%	$	8,134
Misc Expenses		$	-
Total		**$**	**89,000**

Annual Cost for Enterprise Historian License	$10,600
Annual cost for 2 Historian Web Client Licenses	$338
Total	$10,938

SW-26

Broaden The Data Set Archived by the Sewer Utility Historian

Hardware Items	**Qty**	**Unit Prices**	**Extended**
	0	$ -	$ -
Hardware Subtotal			$ -
Software Items			
	0	$ -	$ -
Software Subtotal			$ -
Totals	0	$ -	$ -

Installation/ Configuration	**Qty**	**Unit Price**	**Extended**
Site/PLC Program Investigation of current available signals	1	$ 27,000	$ 27,000
Workshops to select parameters from findings	1	$ 5,000	$ 5,000
Historian Configuration	4	$ 7,500	$ 30,000

Subtotal Configuration, Programming and Startup		*$*	*62,000*
Contingency	10%	*$*	*6,200*
Total Configuration, Programming and Startup		***$***	***68,200***
Subtotal Hardware Costs		*$*	-
Contingency	*15%*	*$*	-
Hardware Total		***$***	**-**
Subtotal Software Costs		*$*	-
Contingency	*15%*	*$*	-
Software Total		***$***	**-**
Total Hardware and Software Costs		**$**	**-**
Admin/QC	10%	$	6,820
Misc Expenses		$	-
Total		**$**	**75,000**

(1 PLC/day for 4.5 weeks (*40hrs))*150= Cost

DC-27A

Develop ICS Standards (Hardware)

Hardware Items	Qty	Unit Prices	Extended
Tablets	5	$ 1,000	$ 5,000
Hardware Subtotal			$ 5,000
Software Items			
	0	$ -	$ -
Software Subtotal			$ -
Totals	5	$ 1,000	$ 5,000

Installation/ Configuration	Qty	Unit Price	A Extended
SCADA Control Panel Std	1	$ 34,996	$ 34,996
SCADA Instrument and Vendor Communication Std	1	$ 28,116	$ 28,116
SCADA Network Design and Hardware Std	1	$ 30,300	$ 30,300
SCADA Equipment Procurement Std	1	$ 24,188	$ 24,188

Subtotal Configuration, Programming and Startup		*$*	*117,600*
Contingency	*10%*	*$*	*11,800*
Total Configuration, Programming and Startup		***$***	***129,400***
Subtotal Hardware Costs		*$*	*5,000*
Contingency	*15%*	*$*	*750*
Hardware Total		***$***	***5,750***
Subtotal Software Costs		*$*	-
Contingency	*15%*	*$*	-
Software Total		***$***	**-**
Total Hardware and Software Costs		**$**	**5,750**

Admin/QC	10%	$	13,515
Misc Expenses		$	5,000
Total		**$**	**154,000**

DC-27B

Develop ICS Standards and Governance Documents

Hardware Items	Qty	Unit Prices	Extended
Hardware Subtotal			$ -
Software Items			
	0	$ -	$ -
Software Subtotal			$ -
Totals	0	$ -	$ -

Installation/ Configuration	Qty	Unit Price	Extended
SCADA Application Programming Std for PLCs	1	$ 70,924	$ 70,924
HMI Software and Architecture Std	1	$ 19,774	$ 19,774
SCADA Application Programming Std for HMI	1	$ 67,624	$ 67,624
SCADA Data Historization and Archiving Std	1	$ 30,140	$ 30,140
SCADA Cybersecurity and Network Monitoring Std	1	$ 35,868	$ 35,868
SCADA Software Management and Revision Control Std	1	$ 31,068	$ 31,068
Staff Roles and Skills Development Std	1	$ 24,796	$ 24,796

Subtotal Configuration, Programming and Startup		*$*	*280,200*
Contingency	*10%*	*$*	*28,100*
Total Configuration, Programming and Startup		***$***	***308,300***
Subtotal Hardware Costs		*$*	-
Contingency	*15%*	*$*	-
Hardware Total		***$***	**-**
Subtotal Software Costs		*$*	-
Contingency	*15%*	*$*	-
Software Total		***$***	**-**
Total Hardware and Software Costs		***$***	**-**

Admin/QC	10%	$	30,830
Misc Expenses		$	5,000
Total		**$**	**344,000**

DC-28

Develop and Maintain Control Strategy Documentation

Hardware Items	**Qty**	**Unit Prices**	**Extended**
	0	$ -	$ -
Hardware Subtotal			$ -
Software Items			
	0	$ -	$ -
Software Subtotal			$ -
Totals	0	$ -	$ -

Installation/ Configuration	**Qty**	**Unit Price**	**Extended**
Process Assessments for the WWTPs/Pumpstations	1	$ 138,000	$ 138,000
Workshops to review findings	4	$ 5,000	$ 20,000
Finalize Control Strategies for WWTPs and Pump stations	1	$ 30,000	$ 30,000
Subtotal Configuration, Programming and Startup			*$ 138,000*
Contingency		10%	*$ 13,800*
Total Configuration, Programming and Startup			***$ 151,800***
Subtotal Hardware Costs			*$ -*
Contingency		*15%*	*$ -*
Hardware Total			***$ -***
Subtotal Software Costs			*$ -*
Contingency		*15%*	*$ -*
Software Total			***$ -***
Total Hardware and Software Costs			***$ -***

Admin/QC	10%	$ 15,180
Misc Expenses		
Total		**$ 167,000**

(1 PLC/week for (23PLCs) (*40hrs))*150= Cost

OS-29

Complete Hach WIMS Implementation and Establish Data Exchange with AVEVA System Platform

Hardware Items	**Qty**	**Unit Prices**	**Extended**
	0	$ -	$ -
Hardware Subtotal			$ -
Software Items			
	0	$ -	$ -
Software Subtotal			$ -
Totals	0	$ -	$ -

Installation/ Configuration	**Qty**	**Unit Price**	**Extended**
Sewer Utility will handle internally	1	$ 5,000	$ 5,000

Subtotal Configuration, Programming and Startup		*$*	*5,000*
Contingency	10%		
Total Configuration, Programming and Startup			
Subtotal Hardware Costs		*$*	-
Contingency	*15%*	*$*	-
Hardware Total		***$***	**-**
Subtotal Software Costs		*$*	-
Contingency	*15%*	*$*	-
Software Total		***$***	**-**
Total Hardware and Software Costs		***$***	**-**

Admin/QC	10%	$	-
Misc Expenses			
Total		***$***	**-**

2 weeks (40hr)*150 = Cost

OS-30

Complete Asset Creation and Data Entry Required for LLumin Implementation, Establish Automatic Importing of Asset Runtimes, and Develop a Plan for Automating Work Order Generation

Hardware Items	**Qty**	**Unit Prices**	**Extended**
	0	$ -	$ -
Hardware Subtotal			$ -
Software Items			
Software Subtotal			$ -
Totals	0	$ -	$ -

Installation/ Configuration	**Qty**	**Unit Price**	**Extended**
Workshops to determine Data	2	$ 5,000	$ 10,000
Pilot Project connecting Tier 2 Historian to Llumin	1	$ 24,000	$ 24,000
Add additional Data from Tier 2 historian to Llumin	1	$ 12,000	$ 12,000
Establish connection from Llumin to AVEVA System Platform	1	$ 24,000	$ 24,000
Integration with Cartagraph	1	$ 250,000	$ 250,000

Subtotal Configuration, Programming and Startup		*$ 320,000*
Contingency	*10%*	*$ 32,000*
Total Configuration, Programming and Startup		***$ 352,000***
Subtotal Hardware Costs		*$ -*
Contingency	*15%*	*$ -*
Hardware Total		***$ -***
Subtotal Software Costs		*$ -*
Contingency	*15%*	*$ -*
Software Total		***$ -***
Total Hardware and Software Costs		***$ -***

Admin/QC	10%	$ 35,200
Misc Expenses		
Total		**$ 387,000**

4 weeks (40hr)*150 = Cost

OS-31

Begin Leveraging the Sewer Utility's Power and Energy Data

Hardware Items	**Qty**	**Unit Prices**	**Extended**
		$ -	$ -
Hardware Subtotal			$ -
Software Items			
		$ -	$ -
Software Subtotal			$ -
Totals	0	$ -	$ -

Installation/ Configuration	**Qty**	**Unit Price**	**Extended**
Integrate existing PQMs to AVEVA System Platform	11	$ 1,000	$ 11,000
Workshops/Develop KPI Dashboard	1	$ 6,000	$ 6,000

Subtotal Configuration, Programming and Startup		*$*	*17,000*
Contingency	10%	*$*	*1,700*
Total Configuration, Programming and Startup		***$***	***18,700***
Subtotal Hardware Costs		*$*	-
Contingency	*15%*	*$*	-
Hardware Total		***$***	**-**
Subtotal Software Costs		*$*	-
Contingency	*15%*	*$*	-
Software Total		***$***	**-**
Total Hardware and Software Costs		***$***	**-**
Admin/QC	10%	$	1,870
Misc Expenses			
Total		***$***	**21,000**

NA-32

Relocate Network Rack in Solids Processing Building

Hardware Items	Qty	Unit Prices	Extended
PLC Panel	$ 1	$ 50,000	$ 50,000
Hardware Subtotal			$ 50,000
Software Items			
	0	$ -	$ -
Software Subtotal			$ -
Totals	1	$ 50,000	$ 50,000

Installation/ Configuration	Qty	Unit Price	Extended
Building Assessment and Engineering a room (HVAC and cabling)	1	$ 50,000	$ 50,000

Subtotal Configuration, Programming and Startup		*$*	*50,000*
Contingency	*10%*	*$*	*5,000*
Total Configuration, Programming and Startup		***$***	***55,000***
Subtotal Hardware Costs		*$*	*50,000*
Contingency	*15%*	*$*	*7,500*
Hardware Total		***$***	***57,500***
Subtotal Software Costs		*$*	-
Contingency	*15%*	*$*	-
Software Total		***$***	**-**
Total Hardware and Software Costs		**$**	**57,500**
Admin/QC	10%	$	11,250
Misc Expenses			
Total		**$**	**124,000**

B

Appendix B – Schedule

This page intentionally left blank

ID		Task Mode	Task Name	Duration	Start	Finish	Predecessors	Resource Names
1			**SCADA Master Plan**	**1745 days**	**Mon 1/9/23**	**Fri 9/14/29**		
2			**Quick Wins & Immediate Needs**	**1565 days**	**Mon 1/9/23**	**Fri 1/5/29**		
3			DC-27A SCADA Standards - Hardware	4 mons	Mon 1/9/23	Fri 4/28/23		
4			HW-8 Prioritize PLC & OIT for EOL replacement	2 mons	Mon 5/1/23	Fri 6/23/23	3	
5			HW-10 Develop Instrument Cal and Maint Program	3 mons	Tue 6/6/23	Mon 8/28/23	3	
6			NA-1 Upgrade CKTP Control Room	12 mons	Mon 5/1/23	Fri 3/29/24	3	
7			DC-28 Control Strategy Documentation	18 mons	Tue 6/6/23	Mon 10/21/24	3	
8			SW-23 WWTP Standalone to AVEVA SP Managed Intouch Apps	0.05 mons	Mon 1/9/23	Mon 1/9/23		
9			**Near Term Improvement**	**1305 days**	**Mon 1/8/24**	**Fri 1/5/29**		
10			DC-27B SCADA Standards - Software/Governance	6 mons	Mon 1/8/24	Fri 6/21/24	3	
11			NA-32 Relocate Network Rack in Solids Processing Building	3 mons	Mon 6/24/24	Fri 9/13/24	3,10	
12			NA-4 CKTP OT Network Upgrades	6 mons	Mon 9/16/24	Fri 2/28/25	10,11	
13			NA-2 Extend OT Network to PW Annex	3 mons	Mon 8/5/24	Fri 10/25/24		
14			NA-5 Standardization to Managed Switches	2 mons	Mon 9/16/24	Fri 11/8/24	11	
15			NA-6 ICS and OT Network PS Improvements	6 mons	Mon 3/3/25	Fri 8/15/25	12,10	
16			SW-26 Broaden Data Set at CKTP Tier 1 Historian	9 mons	Mon 3/3/25	Fri 11/7/25	7,12,10	
17			HW-13 CKTP Instrumentation Improvements	18 mons	Mon 3/3/25	Fri 7/17/26	7,12,3,10	

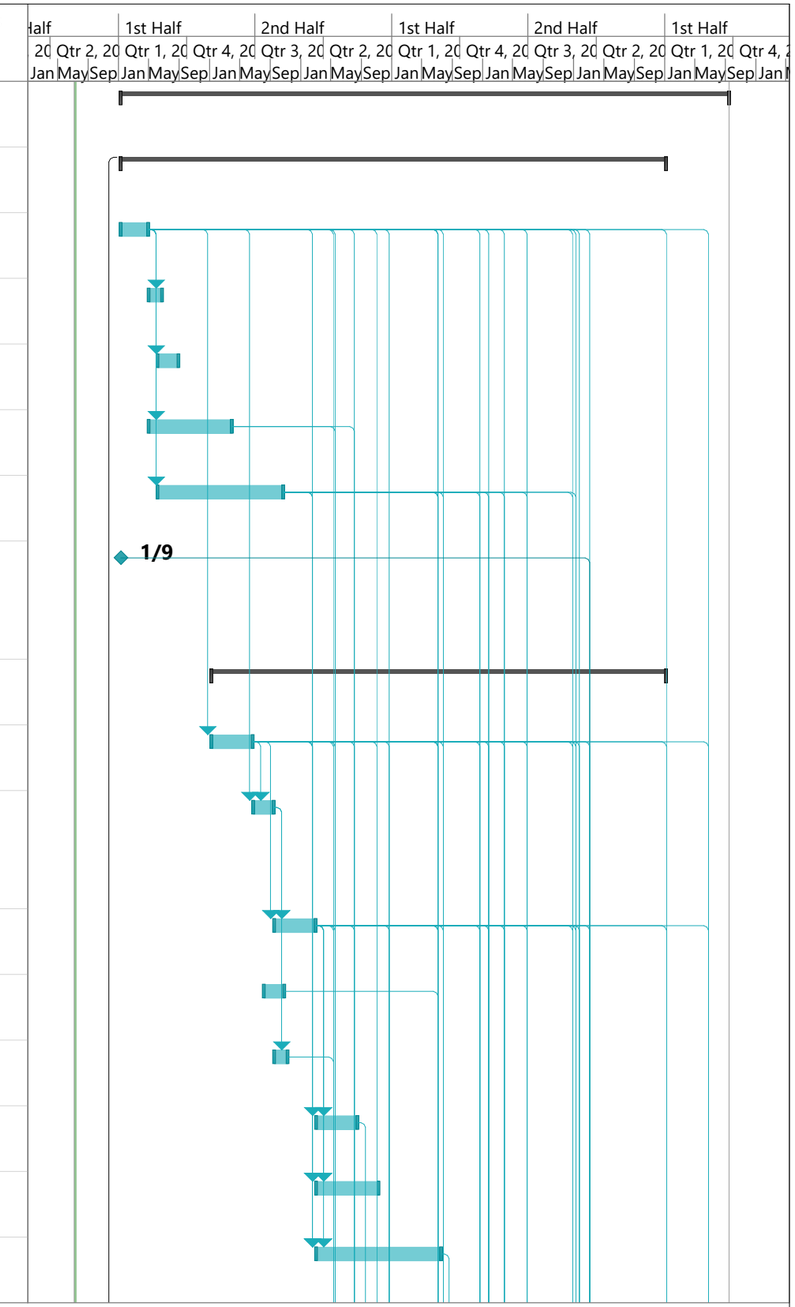

Project: SCADA Master Plan Pro
Date: Tue 7/12/22

Task	Project Summary	Manual Task	Start-only	Deadline
Split	Inactive Task	Duration-only	Finish-only	Progress
Milestone	Inactive Milestone	Manual Summary Rollup	External Tasks	Manual Progress
Summary	Inactive Summary	Manual Summary	External Milestone	

ID		Task Mode	Task Name	Duration	Start	Finish	Predecessors	Resource Names
18			NA-3 Remote PS and WWTP Telementry Improvements	24 mons	Mon 5/26/25	Fri 3/26/27	3,12,14,10	
19			SW-24 Alarm Management Program Based on ISA 18.2	6 mons	Mon 6/2/25	Fri 11/14/25	3,12,6,10	
20			NA-7 DMZ and AVEVA Intouch Access Anywhere Imp	12 mons	Mon 8/18/25	Fri 7/17/26	3,12,15,6,10	
21			HW-12 Integrate Sampler A&M for New Samplers	6 mons	Mon 11/17/25	Fri 5/1/26	19,3,10	
22			HW-9 Replace CKTP MCC DeviceNet	9 mons	Mon 1/5/26	Fri 9/11/26	12,3,10	
23			SW-25 Tiered Historian at CKTP	3 mons	Mon 7/20/26	Fri 10/9/26	3,20,13,10	
24			HW-14 CKTP Automation Improvements	12 mons	Mon 7/20/26	Fri 6/18/27	3,12,7,17,10	
25			HW-15 KWWTP Instrumentation Improvements	6 mons	Mon 7/20/26	Fri 1/1/27	3,12,7,10	
26			HW-17 MWWTP Instrumentation Improvements	12 mons	Mon 8/10/26	Fri 7/9/27	3,12,7,10	
27			HW-16 KWWTP Automation Improvments	6 mons	Mon 1/4/27	Fri 6/18/27	3,12,20,7,25,10	
28			HW-19 SWWTP Instrumentation Improvements	12 mons	Mon 2/8/27	Fri 1/7/28	3,12,7,10	
29			HW-21 Remote PS Intrumentation Improvements	6 mons	Mon 4/12/27	Fri 9/24/27	3,12,7,10	
30			HW-18 MWWTP Automation Improvements	6 mons	Mon 7/12/27	Fri 12/24/27	3,12,20,7,10,26	
31			HW-22 Remote PS Automation Improvements	12 mons	Tue 1/11/28	Mon 12/11/28	3,12,20,7,10,29	
32			HW-20 SWWTP Automation Improvements	6 mons	Mon 1/24/28	Fri 7/7/28	3,12,20,7,10,28	
33			HW-11 CKTP Digester Bldg PNL 6000 Replacement	12 mons	Mon 2/7/28	Fri 1/5/29	3,12,10	
34			OS-31 Power and Energy Data Integration to SCADA	3 mons	Mon 3/20/28	Fri 6/9/28	3,12,8,10	
35			**Long Term Improvement**	**180 days**	**Mon 1/8/29**	**Fri 9/14/29**	**2SS+60 mons**	

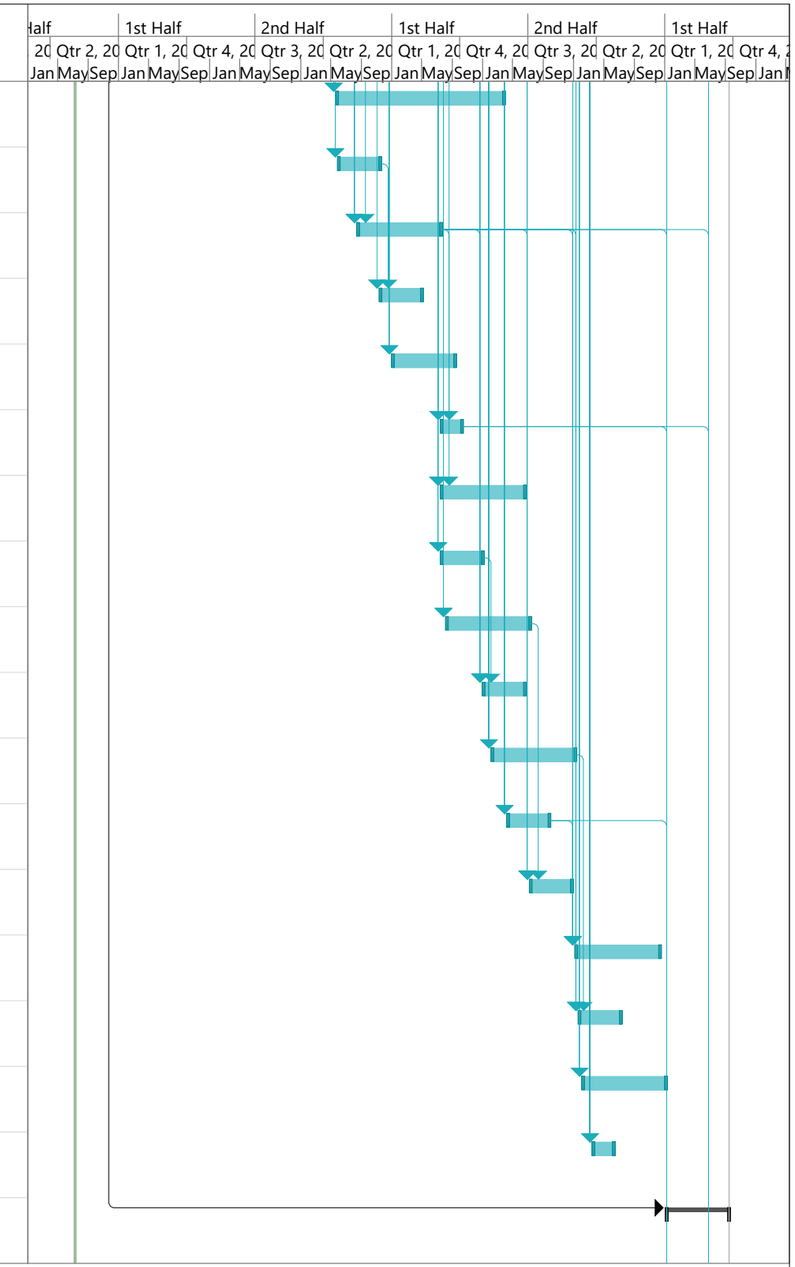

Project: SCADA Master Plan Pro
Date: Tue 7/12/22

Task		Project Summary		Manual Task		Start-only		Deadline	
Split		Inactive Task		Duration-only		Finish-only		Progress	
Milestone		Inactive Milestone		Manual Summary Rollup		External Tasks		Manual Progress	
Summary		Inactive Summary		Manual Summary		External Milestone			

ID		Task Mode	Task Name	Duration	Start	Finish	Predecessors	Resource Names
36			OS-30 Llumin integration with Tier 2 Historian/System Platform	6 mons	Mon 1/8/29	Fri 6/22/29	3,12,20,23,29,10	
37			OS-29 Hach WIMS Implementation Data Exchange with AVEVA SP	3 mons	Mon 6/25/29	Fri 9/14/29	3,12,20,23,36,10	

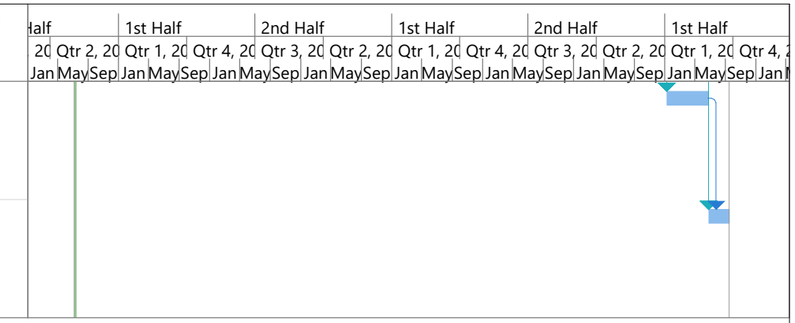

Project: SCADA Master Plan Pro
Date: Tue 7/12/22

Task		Project Summary		Manual Task		Start-only		Deadline	
Split		Inactive Task		Duration-only		Finish-only		Progress	
Milestone		Inactive Milestone		Manual Summary Rollup		External Tasks		Manual Progress	
Summary		Inactive Summary		Manual Summary		External Milestone			

Appendix L. Project Delivery Report

Central Kitsap Treatment Plant Solids and Liquid Hauled Waste Upgrades

Alternative Delivery Workshop Report

Poulsbo, WA

September 21, 2023

DRAFT
09/26/2023 9:52:04 AM

DRAFT
09/26/2023 9:52:04 AM

Contents

Executive Summary 1
1 Introduction 2
2 Project Background 3
3 Report Purpose and Organization 4
4 Workshop Structure 4
5 Criteria Weighting 4
6 Description of Alternative Project Delivery Methods 5
6.1 Design-Bid-Build 5
6.2 General Contractor/Construction Manager 5
6.3 Design-Build 6
6.3.1 Progressive Design-Build 7
6.3.2 Design-Build Operate 7
7 Comparison of Delivery Methods 8
7.1 Criteria Ranking 8
7.1.1 Schedule Certainty 8
7.1.2 Cost Certainty 8
7.1.3 Design to Budget 9
7.1.4 Owner Control of Design Details 9
7.1.5 Collaboration 9
7.1.6 Innovation 10
7.1.7 Project Delivery Learning Curve 10
7.1.8 Risk Allocation/Sharing 10
7.1.9 Performance Certainty 11
7.1.10 Project Design Completeness 11
7.2 Final Ranking 11

DRAFT
09/26/2023 9:52:04 AM

Tables

Table 5-1. Criteria Weighting 4
Table 7-1. Delivery Method Ranking 12

Appendices

Appendix A. Collaboratve Delivery Workshop Agenda (July 18, 2023) A-1
Appendix B. Summary of Advantages and Disadvantages of Project Delivery Methods B-1

This page is intentionally left blank.

DRAFT
09/26/2023 9:52:04 AM

Executive Summary

This Collaborative Delivery Workshop Report presents the results of a workshop held on July 18, 2023, to evaluate methods for delivering the design, construction, and operation of the Central Kitsap Treatment Plant (CKTP) Solids and Liquid Hauled Waste Upgrades (Project). The purpose of this workshop was to make a recommendation to Public Works Division (PWD) of Kitsap County on the most beneficial delivery method for the Project. The project delivery methods considered include the following:

- Design-Bid-Build (DBB)
- General Contractor/Construction Manager (GC/CM)
- Design-Build (DB)
- Progressive Design-Build (PDB)
- Design-Build Operate (DBO)

The options were discussed and ranked against evaluation criteria. The participants preferred options that prioritized cost and scheduling certainties due to safety factors of continuing operation of existing digesters at the end of their service life. Therefore, the collaboration methods for consideration include DBB, GC/CM, PDB, and DBO.

The DBB method is used as a baseline to compare against other delivery methods. It is a conventional, linear-based delivery method that continues to have success over decades of use. Strengths of the DBB approach include its well-understood risk allocation, predictable schedule, proven and familiar methodology, and traditional roles. However, multiple contracts, deliverables, and procurements are required, as well as a comparably extended timeline.

GC/CM is a collaborative delivery method in which the Owner hires a design engineer and a General Contractor/Construction Manager (GC/CM) under separate contracts. In many ways it is similar to the DBB method but has the additional benefit of collaboration between the Designer and the Contractor.

The DB methods, which include PDB and DBO deliveries, have a single contract for design and construction. This collaboration can shorten the project schedule and reduce project costs. However, these methods can add complexity and requires a more involved procurement phase.

Based on a criterion ranking, the GC/CM and PDB alternatives outweighed the DBB, DB, and DBO methods. The County will need to obtain permission from the Project Review Committee (PRC) as a next step in the pursuit of using GC/CM. The PRC controls the ability of agencies in the state of Washington to use alternative project delivery methods.

DRAFT
09/26/2023 9:52:04 AM

1 Introduction

This report summarizes the results of a workshop that was held to address project delivery methods for the Central Kitsap Treatment Plant (CKTP). The workshop was held at the SKTP in Poulsbo, WA on July 18, 2023. Andrew Staples, Guy Voss, and Todd Jensen of HDR Engineering facilitated the workshop and participated in the presentations and discussion. Participants from Kitsap County included the following:

- Chris Sheridan
- Nick Martin
- Matthew Pickering
- Barbara Zaroff
- Rich Neal
- Ken Young
- Stella Vakarcs
- Floyd Bayless
- Dennis Graham
- Randall Bolton

DRAFT
09/26/2023 9:52:04 AM

2 Project Background

Central Kitsap Treatment Plant provides wastewater treatment for much of the central Kitsap Peninsula. Solids, including those hauled from the County's other treatment plants are thickened and digested anaerobically at CKTP before dewatering and disposal. CKTP also receives Liquid Hauled Waste (LHW) in the form of septage along with fats, oils, and grease (FOG).

The plant is rated for maximum month flow rate of 6.0 million gallons per day (MGD) as listed in the NPDES Permit. The treated effluent is discharged to Port Orchard Bay of the Puget Sound in accordance with the County's individual NPDES Permit.

The key components of the current plant solids handling facilities include gravity thickeners, boiler-heated anaerobic digesters, a septage receiving station, and an in-plant pump station. Given the age of the equipment, the steady increase in both WWTP solids and LHW, and changing permit conditions, the facilities currently experience capacity, operational, and performance issues. It will also be necessary to construct a replacement maintenance facility for the CKTP to provide a location for a new anaerobic digester. A lack of redundancy also constrains routine maintenance and poses emergency operation risks. As part of the 2020 Sewer Comprehensive Planning process, the County evaluated existing conditions and alternative improvement upgrades and compiled those findings into a preferred capital project. The results of that analysis – including a layout of the treatment plant presented in a technical memorandum CKTP Solids Handling Improvement Recommendations, dated Oct. 19, 2022. To summarize, this phase of work will provide predesign to 30% documents with a focus on Building Information Model (BIM) model development rather than initial drawing production to facilitate design decisions and preparation of an Engineer's Opinion of Probable Construction Cost for the following new/replacement project elements:

- New mechanical sludge thickening
- Two new 0.65-million-gallon anaerobic digesters and building in-plant pump station.
- Replacement Operation and Maintenance (O&M) Building to make room for the new 0.65 MG digesters. None of the other design elements may be constructed and operational. This is the reason for the expediated replacement.
- New FOG receiving station
- New septage receiving station
- New septage grit removal
- New hot water system

It is expected that design, permitting, and final funding applications will be completed during 2024, with construction beginning by the first quarter of 2025 and project completion by the fourth quarter of 2026.

DRAFT
09/26/2023 9:52:04 AM

3 Report Purpose and Organization

The purpose of this report is to summarize the discussions that occurred during the workshop. The report is organized as follows:

- Description of the project delivery methods considered, Design-Bid-Build (DBB), General Contractor/Construction Manager (GC/CM), Design-Build (DB), Progressive Design-Build (PDB), and Design-Build Operate (DBO).
- A comparison and ranking of the methods by the participants using a multiple evaluation criterion matrix.
- The participant's findings and related action steps.

4 Workshop Structure

The workshop agenda is shown in Appendix A. On the morning of July 18, 2023, the workshop participants first discussed criteria that would be used in the afternoon to evaluate the delivery method options and the relative weight of each. The alternative methods then were ranked against the evaluation criteria followed by a discussion of how to proceed considering the results.

5 Criteria Weighting

The importance of each evaluation criterion to Kitsap County is shown in Table 5-1 by a weighting factor of 1 to 10, with 10 being very important. Following group discussion in the workshop, Kitsap County established the weights of each criterion. The assigned weights are discussed in the following sections that discuss the participant's rankings of each criterion.

Table 5-1. Criteria Weighting

Evaluation Criteria	Weight
Schedule Certainty	10
Cost Certainty	9
Design to Budget	9
Owner Control (Procure, Design, Budget)	8
Collaboration	8
Innovation	6
Project Delivery Learning Curve	6
Risk Allocation/Sharing	5
Performance Certainty	4
Project Design Completeness	3

DRAFT
09/26/2023 9:52:04 AM

6 Description of Alternative Project Delivery Methods[1]

6.1 Design-Bid-Build

In the traditional public sector Design-Bid-Build (DBB) method, the owner is responsible for the design, construction, and operation of the project. The owner has two contractual relationships: one with the design engineer who designs the facility and one with the construction contractor who builds the facility. The design engineer and the owner collaborate to establish the project framework and develop the design basis. The design engineer prepares the engineering design and assists with the subsequent bidding and construction process. There is no involvement of the construction contractor during the design stage.

Bids are solicited from contractors based on contract documents developed by the owner and the design engineer. A contract is then typically awarded to the lowest responsive bidder. Following procurement through the bidding process, the contractor constructs the project. The contractor works to a defined scope of work for a fixed price. Once the project's construction phase is complete and the project operations have been successfully demonstrated, and the contract receives approval of final project completion, the construction contractor has no remaining connection with the project beyond the warranty period (typically one or two years) and the owner is responsible for the ongoing operation and maintenance.

6.2 General Contractor/Construction Manager

The General Contractor/Construction Manager (GC/CM) delivery method evolved from traditional DBB to obtain contractor input during the design phase. In GC/CM, the owner contracts separately with a designer and a GC/CM. The designer is contracted by the owner using a qualifications-based submittal process and is responsible for the design. The GC/CM is also selected using a qualifications-based submittal process.

The GC/CM provides design phase input and assistance. During construction the GC/CM may select to self perform portions of the work and selects qualified subcontractors for the remaining portions through a value-based selection process. The designer and GC/CM work with the owner under separate contracts but are scoped to work together as a team during design through construction. In DBB, the construction contractor is not selected until the design is complete and provides no input to the design. The GC/CM delivery provides for input from the construction contractor, after their selection and throughout the remaining portion of the design including involvement of the GC/CM in value engineering during design. The owner, designer and GC/CM are involved during the preparation of project cost estimates based on intermediate design milestones such as the 30% and 60% designs. A cost model can be constructed by both the designer and contractor early in the project, in which a gap analysis or comparison of

[1] Descriptions of Alternative Project Delivery Methods are based on descriptions given in the *Water and Wastewater Collaborative Delivery Handbook*. Sixth Edition, Water Collaboration Delivery Association, 2023.

DRAFT 09/26/2023 9:52:04 AM

the estimate is completed to check for missing elements or incorrect assumptions. This method provides a solid basis for determining the effect of any changes on project cost. At some point in the design (often between the 60% and 90% design milestones), the GC/CM negotiates a Guaranteed Maximum Price (GMP) for the project. After acceptance of the GMP, and sometimes before the CM/GC can start work while design progresses to completion, saving time. If the GMP is not agreed upon the owner can select to take what is commonly referred to as the “off ramp” and bid out the design, once completed in using a conventional Design-Bid-Build (DBB) method. The GMP is not exceeded unless the owner issues a change order. Any savings in costs under the GMP can be shared by the owner and the GC/CM or retained in full by the owner. Following acceptance of the project, the responsibility for project operation and maintenance transfers to the owner subject to the basic warranties of construction.

6.3 Design-Build

One of the key characteristics that sets Design-Build (DB) projects apart from DBB and GC/CM is the presence of a single point of accountability for both the design and construction performance of the project. DB can be carried out in multiple fashions, including Progressive Design-Build (PDB) and Design-Build Operate (DBO).

A commonality amongst all design-build methods is a single contract between the owner and the design-build team serves as the basis for the DB method, which eliminates the need for separate agreements between the design team and the contractor.

In DB, the owner contracts with a single entity to design and build the project. The operation of the resulting facility is transferred to the owner after it is completed. The contract is with a single entity and can be executed in several ways including but not limited to a single, fixed-fee contract for both engineering services and construction, or task orders for design and early work packages followed by a GMP. The design-builder may be a single firm, consortium, joint venture or other organization assembled for the project. The construction member is typically the head of the team to meet insurance and other requirements and leads the DB team with the design engineer as a subcontractor.

In selecting the design-builder, the owner employs a competitive proposal process, which can consist of the issuance of a request for qualifications followed by a request for proposals and an interview. The design-builder is selected based on the overall value of the proposal, considering factors such as qualifications, performance guarantees, the quality of the proposed design, as well as price, rather than price alone.

The typical DB contract requires the design-builder to design and construct a project in accordance with a basic set of design requirements and to demonstrate that the project can achieve a defined set of performance standards through the successful completion of an acceptance test.

Design and construction services can be carried out concurrently, saving time. Following acceptance of the project, the responsibility for project operation and maintenance transfers to the owner, subject to basic warranties of construction.

DRAFT
09/26/2023 9:52:04 AM

Progressive Design-Build

In both DB and Progressive Design-Build (PDB) the owner contracts with a private entity to design and build the project. In both methods, the owner typically employs a competitive proposal process in selecting the Design-Builder which consists of the issuance of a request for qualifications followed by a request for proposals, and interview. In other respects, the procurement and design processes are quite different.

In DB, each Design-Builder candidate includes a detailed design and a fixed price, or lump sum for design and construction in its proposal. There is an element of design competition in DB that benefits the owner, but it can take several months for the proposers to develop their designs and cost proposals. Each proposer makes a substantial investment in time and money at the proposal stage and is typically compensated for this effort by the owner. The Design-Builder is selected based on the overall value of the proposal, considering factors such as qualifications, performance guarantees, the quality of the proposed design, as well as price, rather than price alone.

In PDB, the owner contracts with the Design-Builder based upon a qualification-based selection process. The “Progressive” in “Progressive Design-Build” does not mean it is the next evolution of Design-Build (DB). “Progressive” refers to the way the design is developed by the owner and Design-Builder in a step-by-step progression as the project design is developed after selection of the Design-Builder. In PDB the initial contract with the Design-Builder is for services typically includes the development of the design to a 60-75% level. At that point, a guaranteed maximum price (GMP) for completion of design and construction is proposed and negotiated. The design then progresses to the next step of completion. If the negotiation fails, the owner can take what is commonly referred to as the “PDB off ramp” and use conventional Design-Bid-Build (DBB) to complete the project. Ultimately, similar to CM/GC, the design-builder is only responsible through final completion and warranty on the project. Once complete the owner retains the project to maintain and operate.

DRAFT
09/26/2023 9:52:04 AM

Design-Build Operate

With the Design-Build Operate (DBO) method, the owner contracts with a private entity to design, build and operate the project. The operation of the resulting facility may be transferred to the owner after the operations portion of the contract is completed. owners have similar options to the PDB contracts and may select to include the operational portion of the project up front, or later as a buy-out. The DBO entity may be a single firm, consortium, joint venture or other organization assembled for the project. The construction member is typically the head of the team to meet insurance and other requirements and leads the DB team with the design engineer as a subcontractor.

In selecting the DBO, the owner employs a competitive proposal process, which typically consists of the issuance of a request for qualifications followed by a request for proposals, and an interview. The DBO is selected based on the overall value of the proposal, considering factors such as qualifications, performance guarantees, the quality of the proposed design, as well as price, rather than price alone.

The typical DBO contract requires the DBO to design and construct a project in accordance with a basic set of design requirements and to demonstrate that the project can achieve a defined set of performance standards through the successful completion.

Design and construction services can be carried out concurrently, saving time. Upon substantial completion of all or portions of the project process, the design-builder is responsible for the project maintenance and operations. Following acceptance of the project completion through the set warranty, maintenance, and operational period the responsibility for project operation and maintenance may transfer back to the owner.

7 Comparison of Delivery Methods

The participants used a multiple criteria analysis matrix to compare the delivery methods. Their discussion for each of the criteria is summarized below.

7.1 Criteria Ranking

The matrix shown in Appendix B describing the advantages and disadvantages of each method was used to assist in the ranking process.

7.1.1 Schedule Certainty

This criterion relates to the time required to design and construct the project. This was identified as the most important criterion for this analysis by Kitsap County.

The participants ranked DB, PDB and DBO highest with an edge over DBB, GC/CM with regard to schedule. By contrast with DBB and GC/CM, DB, PDB and DBO allows concurrent design and construction while DBB and GC/CM do not. There would be a greater risk of delays related to bid protests in DBB. In GC/CM, if the owner cannot arrive at arrive at a mutually agreeable price with the GC/CM team for the construction of the project, the owner must then go through a bidding process for construction. This could have a negative impact on schedule. DB and DBO were ranked slightly higher that PDB because there is potential for project delay from difficulties in negotiating a Guaranteed Maximum Price (GMP) in PDB.

7.1.2 Cost Certainty

This criterion partly relates to the time at which Kitsap County will know the true cost of the project. It was ranked right behind schedule certainty in importance for Kitsap County.

In DBB, Kitsap County will know an initial cost at the time of construction bidding, but it will be perhaps 3-5 years before the final, true cost is known due to the greater potential in DBB for costs to grow through change orders and claims throughout construction. GC/CM has an advantage over DBB in that Kitsap County will receive construction estimates as the design progresses from the GC/CM and designer which coordinate in a GMP. In DB, PDB, and DBO methods, contractors propose a firm, fixed price at the time their proposals are submitted, much sooner than in DBB. There are fewer claims, less litigation, and less cost growth in DB and DBO than in DBB. The final firm price for PDB does not come until the 60% design is completed and the GMP is negotiated so PDB was ranked slightly lower than DB and DBO.

DRAFT
09/26/2023 9:52:04 AM

7.1.3 Design to Budget

This criterion relates to the relative capital cost to design and construct the project. When properly applied, the alternative methods can in significant savings. Kitsap County identified this criterion as very important, behind only schedule and cost certainty.

A cost model can be created early in the GC/CM process to enable accurate and timely assessment of the effect of changes on project costs. However, in GC/CM, the guaranteed maximum price for the project is negotiated rather than competitively bid so there is the potential for higher overall cost. Even with this consideration, the cost stability of GC/CM will rank higher than DBB.

In the DB and DBO options, the design competition that occurs during the selection process can reduce project costs significantly. DB is more often associated with design competition relative to GC/CM and DBB. GC/CM and PDB also provide time savings in concurrent design and construction which translates into cost savings. Therefore, PDB was ranked equivalent to GC/CM for this criterion. DB and DBO rankings fell at the midpoint between the high (GC/CM and PDB) and low (DB) ranks, due to their significant, but not high, preference.

7.1.4 Owner Control of Design Details

This criterion relates to the ability of Kitsap County to control the design details and the resulting nature of the final project. It was ranked fourth overall for importance by Kitsap County.

In DBB and GC/CM, Kitsap County has a great deal of control over the project, although this control is accompanied by the retention by Kitsap County of the risk associated with being responsible for the design. The participants noted that in GC/CM the owner works with the designer and contractor during the design which produces a higher level of control than in DB. In DB and DBO, the Owner has less control than in DBB or GC/CM unless the specifications are prescriptive. However, prescriptive specifications reduce the value of DB because more of the design risk resides with Kitsap County. PDB offers the owner more involvement until the design reaches the 60% level when the GMP is negotiated. Thus, PDB was rated slightly higher than DB, DBO and DBFO.

7.1.5 Collaboration

This criterion relates to the priority of collaboration between various combinations of Owners, Designers, Builders, and Operators. Kitsap County rated this as mid-level on their importance ranking.

DBB provides the least amount of collaboration between parties, which is why it is not considered a Collaborative Delivery Method. It has the lowest ranking for this criterion. GC/CM has collaboration between the designer and constructor, which can bring major benefits to the project. Similarly, PDB allows the owner to be involved during the design process up to the 60% design. Therefore, GC/CM and PDB were ranked the highest. DB and DBO have collaboration between the designer and engineer but can have less collaboration with the owner compared to GC/CM and PDB. Therefore, DB and DBO have lower rankings.

DRAFT
09/26/2023 9:52:05 AM

7.1.6 Innovation

This criterion relates to perspectives such as technology, construction methods, and risk management. It specifically relates to performance-based versus prescriptive project requirements. This was ranked as mid-level importance by Kitsap County.

DB alternatives, specifically PDB, rank higher in this category due to stimulating competition for factors other than price. PDB ranks the highest in this category because of the opportunities to control design through innovation and manage risks. Similar collaboration with GC/CM also ranks high in this category because high collaboration is critical for implementing innovative solutions. By providing lower levels of collaboration during design, DBB ranks lowest for this category.

7.1.7 Project Delivery Learning Curve

This criterion relates to the flexibility to adapt the project to changing circumstances. Because Kitsap County believes the project concepts are relatively well-developed and the treatment process will have the ability to produce high quality effluent under a wide range of circumstances, Kitsap County concluded this criterion was of lesser importance than other criteria.

In DBB, the owner has flexibility during design in partnership with the designer. However, once the project moves into construction, deviations from the design details require negotiation of a change order. In GC/CM, the construction contractor is involved in the design which reduces the chances that change orders will arise during construction. PDB was ranked higher than the other DB options because there is design flexibility as the design proceeds to the 60% design.

7.1.8 Risk Allocation/Sharing

This criterion is related to how much risk is retained by Kitsap County and the ability to assign risk to the party best equipped to handle that risk. Risk allocation was ranked low for Kitsap County because the similarities with collaboration, which was ranked higher. In addition, Kitsap County has experience with construction management and the management of project risk.

In DBB, the construction contract must be awarded to the lowest responsive bidder which increases the risk of a marginally qualified contractor. If a design error or omission is claimed by the contractor, the contractor will request a change order and there is more chance of litigation using DBB. In GC/CM, Kitsap County retains the liability for the design, but the risk is reduced compared to DBB by the involvement of the construction contractor in the development of the design documents. Gaps in understanding by the CM/GC or in the design documents are typically found before pricing of the project. Also, risks are reduced by the ability to consider qualifications, not just price, in selecting the Construction Manager (CM). Thus, GC/CM was ranked higher than DBB.

In DB, as in GC/CM, risks are reduced by the ability to consider qualifications, not just price, in selecting the DB contractor. Protests on the award of a DB contract are rare. The participants also noted that the risk of bid protests would be very low for GC/CM as well. The risk to Kitsap County is further reduced in DB methods, including PDB and DBO, because the DB contractor is the single party responsible for the design and

DRAFT 09/26/2023 9:52:05 AM

construction of the project. This lowers the risk of the owner becoming caught in the middle of a claim where each party points at the opposing party for responsibility, regardless of whether the reason for the failure is due to a design or construction issue.

7.1.9 Performance Certainty

This criterion relates to the confidence in plant performance over its life cycle. Kitsap County ranks this as low priority for this evaluation.

DBO ranks the highest in this category due to its guarantee of long-term performance. Alternatively, DBB has a low bid contractor, which increases the risk of performance problems, so it is ranked the lowest. Differences regarding this criterion between GC/CM, DB, and PDB are minor, and therefore lie in between the rankings for DBB and DBO.

7.2 Project Design Completeness - Final Ranking

The purpose of the weighted ranking process is to identify the options of most interest. The weighting and ranking involved several subjective considerations and selection of the delivery method will require further discussions. This ranking is only one part of the process to define suitable choices for further detailed evaluation. Table 7-1 presents the final weighted rankings.

Based on lower weighted rankings, the desire to retain more control of the design process and provide collaboration between designer and contractor during the design phase, DBB, DB, and DBO methods were dropped from further consideration. The remaining GC/CM and PDB alternatives are comparable in ranking of the major evaluation criteria. However, GC/CM ranks higher for schedule certainty and owner control. The participants also expressed a preference for GC/CM due to because their previous experiences with that delivery method reducing overall project risks.

After discussing the weighted rankings and considering participant preferences, the GC/CM collaborative delivery method was chosen as the recommended delivery method for the CKTP Liquid and Solids Hauled Waste Upgrades Project.

DRAFT
09/26/2023 9:52:05 AM

Table 7-1. Delivery Method Ranking

Evaluation Criteria	Weight	Ranking					Weighted Ranking				
		DBB	GC/CM	DB	PDB	DBO	DBB	GC/CM	DB	PDB	DBO
Schedule Certainty	10	5	8	10	7	10	50	80	100	70	100
Cost Certainty	9	6	8	9	8	9	54	72	81	72	81
Design to Budget	9	5	9	7	9	7	45	81	63	81	63
owner Control (Procure, Design, Budget)	8	7	9	6	8	5	56	72	48	64	40
Collaboration	8	5	10	7	10	7	40	80	56	80	56
Innovation	6	6	9	7	10	7	36	54	42	60	42
Project Delivery Learning Curve	6	10	8	5	6	4	60	48	30	36	24
Risk Allocation/Sharing	5	5	9	8	9	8	25	45	40	45	40
Performance Certainty	4	5	7	8	8	10	20	28	32	32	40
Project Design Completeness	3	9	8	7	6	7	27	24	21	18	21
						Total	**413**	**584**	**513**	**558**	**507**

DBB = Design-Bid-Build; GC/CM = General Contractor/Construction Manager; DB = Design-Build; PDB = Progressive Design-Build; DBO = Design-Build Operate

DRAFT 09/26/2023 9:52:05 AM

Appendix A. Collaborative Delivery Workshop Agenda (July 18, 2023)

DRAFT
09/26/2023 9:52:05 AM

This page is intentionally left blank.

DRAFT
09/26/2023 9:52:05 AM

Agenda

Project:	PR001012 – CKTP Solids and Liquid Hauled Waste Upgrades
Subject:	Collaborative Delivery Workshop
Date:	Tuesday, July 18, 2023
Location:	CKTP Conference Room
Attendees:	Chris Sheridan, Kitsap County Nick Martin, Kitsap County Matthew Pickering, Kitsap County Barbara Zaroff, Kitsap County Rich Neal, Kitsap County Ken Young, Kitsap County Stella Vakarcs, Kitsap County Floyd Bayless, Kitsap County Dennis Graham, Kitsap County Randall Bolton, Kitsap County Andrew Staples, HDR Guy Voss, HDR Todd Jensen, HDR

Time	Agenda Item	Facilitator
8:00-8:10	Introductions of participants	Andrew
8:10-8:20	Review goals for the day and finalize agenda	Guy
8:20-8:40	Overview of project and status	Andrew
8:40-10:00 Incl. break	Discuss and agree upon delivery model evaluation criteria and their relative weight	Guy
10:00-11:00	Description and group discussion of delivery models • Design Bid Build • GC/CM • Design Build • Progressive Design Build • Design Build Operate	Guy & Todd
11:00-12:00	Ranking of alternatives against agreed upon criteria	Guy & Todd
Noon-12:30	Lunch	
12:30-1:00	Selection of delivery model	Guy & Andrew
1:00-3:00	Executive Summary	Guy & Andrew

DRAFT
09/26/2023 9:52:05 AM

DRAFT
09/26/2023 9:52:05 AM

Appendix B. Summary of Advantages and Disadvantages of Project Delivery Methods

DRAFT
09/26/2023 9:52:05 AM

This page is intentionally left blank.

DRAFT
09/26/2023 9:52:05 AM

SUMMARY OF ADVANTAGES AND DISADVANTAGES OF PROJECT DELIVERY METHODS

	Advantages	Disadvantages
Design Bid Build	• Widely used method for public agency projects • Agencies typically have developed standard contracts and procedures based on experiences from many projects • Owners are comfortable with the DBB approach • Owner maintains a high level of control during the design phase • Typically a large pool of contractors • Owner and contractor familiar with the process • Ability to attract competition	• Requires the longest time for design and construction • No design competition • Little collaboration between designers, builders and operators • Lack of emphasis on life cycle costs • Firm construction costs are not known until bidding process is complete • Prone to change orders • Low bid contractor selection increases risk of performance problems • Owner retains the risk for design errors and project performance
Construction Manager at Risk	• Qualifications-based builder selection. • Collaboration between the designer and the constructor • Reduced potential for change orders • Builder involvement in the design can reduce construction time and change orders • Involvement of construction contractor improves accuracy of budget forecasts • Opportunity for owner involvement • Provides continuous constructability review • Provides earlier price certainty than DBB	• Multiple points or responsibility • No alignment of designer and builder interests • Schedule may slip if difficulty in negotiating GMP • Relies on engineer's estimates for costs until GMP is set • Limited construction price competition • Later price certainty • Full construction scope is subject to change order potential • Owner retains the risk for design errors, life cycle costs and project performance
Design Build	• Builder and designer are selected on qualifications and overall best value • Competition stimulates innovative designs • Can use prequalification to narrow field of proposers to best qualified.	• Less familiarity • Best value proposal evaluation can be complex • Longer, more involved procurement phase

DRAFT 09/26/2023 9:52:05 AM

SUMMARY OF ADVANTAGES AND DISADVANTAGES OF PROJECT DELIVERY METHODS

	• Builder's and designer's interests are aligned • Transfer of design, construction and performance risk to the design-builder • Single contract for design and construction shields the owner from disputes between designer and builder • Shortens project schedule. • Reduces project cost • Reduces change orders • Early price certainty. Construction price is established when proposal is submitted • Collaboration between designer and builder	• Owner gives up some control of details • Limited opportunity for the owner and DB contractor to collaborate once price is set • Design drawings are less detailed than in DBB • Regulatory agencies may not have a procedure in place to review partially complete designs • Owner retains the operating risk • Limited focus on life cycle costs
Progressive Design Build	PDB has the advantages of DB with some differences noted below: • Increased opportunity for owner involvement as the design is advanced to the 60 percent level • Procurement phase is shorter and lower in cost than in DB so may generate more market interest • GMP is developed from prequalified subcontractors who bid on the project to get competition at every level	PDB has the disadvantages of DB with some differences noted below: • The construction cost is not known at the time of the initial contract signing so later price certainty • PDB can be slower than DB • The design competition inherent in DB is lost • Special cost estimating skills needed to negotiate GMP
Design Build Operate	DBO has the advantages of DB with some differences noted below • Provides early fixed price for design, construction and operation • Maximizes focus on life-cycle costs • Long term operating and maintenance costs are guaranteed except for index-linked inflation • Long term performance is guaranteed	DBO has the disadvantages of DB with some differences noted below • Long term need for owner supervision of contract operations • Design drawings are less detailed than in DBB • Fewer companies are interested in contracting for operations

DRAFT 03/26/2023 9:52:06 AM

SUMMARY OF ADVANTAGES AND DISADVANTAGES OF PROJECT DELIVERY METHODS

	• Single point of responsibility. Owner shielded from disputes between designer and builder and operator • Lower project costs	
Design Build Finance and Operate	DBFO has the advantages of DB with some differences noted below • At-risk equity investment further assures performance • Debt is not on the balance sheet of the owner • No payments are made until the facility is in full operation resulting in a deferral of cash flow that can delay rate increases	DBFO has the disadvantages of DB with some differences noted below • Adding financing to the DBO responsibility increases procurement complexity • Adding financing will reduce the number of potential proposers • Owner's debt service is lower than on DBFO company's project debt

DRAFT
09/26/2023 9:52:05 AM

DRAFT
09/26/2023 9:52:05 AM

Appendix M. Opinion of Probable Construction Cost (OPCC)

Kitap Wastewater Treatment – Hauled Waste – Basis of Design

November 17, 2023

Basis of Estimate

This estimate utilizes the following financial data for all pricing included. The direct costs and indirect cost percentages are based on experience, current market conditions, and historical data.

Scope of Work

Kitsap County, Wastewater Department, located in Kitsap Washington, the project is for handling of solids, primary sludge, fat, oil, grease, septage, scum and foam. The average daily flow of the wastewater treatment plant is 6 MGD. The primary sludge flow is 125,800 GPD, waste activated sludge 125,500 GPD, Septage Flows 23,000 GPD, and FOG 1,800 GPD.

The project includes new facilities: Primary Sludge and Septage Building, Digester 3 & 4 with a Control Building, Digester Control Building, FOG Receiving Building, Septage Handling Facility, Septage Influent Box, three Biofilters for odor control, and In-Plant Pump Station. The project also includes a new Operations and Maintenance Building, single story 21,040 SF with a canopy covered parking area of 5,850 SF.

The following are modifications to existing structures: Existing Solids Processing Building, Existing Gravity Thickeners, Digesters 1 &2.

The project includes demolition of existing structures, sitework improvements and 17,270' LF of 4" to 8" yard piping. The level of design is approximately 15%. This Opinion of Probable Construction Cost (OPCC) is considered a Class 4. The project assumed funding by Build America, By America Act.

Cost Summary

Summary of Opinion of Probable Construction Cost		
High Range		Low Range
+50%	Construction Cost	-30%
$ 142,170,000	$ 94,780,000	$ 66,346,000

Direct Cost Methodology

- A combination of HDR database pricing, similar project costs, and historical data were used to establish direct costs.
- Labor rates include all burden and fringes.
- Labor rates are Union Rates. Includes a $8.00/Hour on labor hours to keep and retain craft.
- All labor is done on normal 8-hour days, 5 days a week Monday through Friday.
- Fluctuations in labor, material, and equipment rental pricing have yet to be adjusted due to market stability. Single mobilization.
- Assumed craft labor is available in the general area.

Indirect Cost Methodology

- General Contractor Mobilization & Demobilization – (4%)
- General Contractor Home Office Overhead – (4%)
- General Contractor Field General Conditions – (12%)
- Sales Tax – (9.2%)
- General Contractor Fee/Profit – (15%)
- Design contingency – (30%)
- General Contractor Bonds & Insurance – (2.5%)
- Escalation Factor (12.66%) – Material, Labor, Construction Equipment, and Fuel
- Market Volatility Adjustment Factor (2%) – Supply-chain issues, Price Volatility, Transportation Issues, Labor Shortages, Premiums on Labor to Keep and Retain Craft Labor, Russian Invasion of Ukraine, Longer Lead Times Than Normal, and Covid Mandates.
- Build America/Buy American Act – Included BABA requirements on all materials except for ready-mix concrete and aggregate. 15%-mark ups on all qualified materials and one full time person handling the paperwork for 8 months.

Allowances:

- Yard Piping:
    - Potable Water (W1) – Copper 2" Dia – 2,000' LF
    - Natural Gas – Steel – 3" Dia – 2,000' LF
    - Hot Water Supply and Return – Steel – 8" Dia – 1,200' LF
    - Sanitary Sewer – PVC SDR 35 – 8" Dia – 2,000' LF
    - Non-Potable Washdown Water – PVC – 4" Dia – 2,000' LF
    - Stormwater:
        - RCP – 12" Dia – 1,000' LF
        - RCP – 18" Dia – 1,000' LF
        - Manholes – 48" x 10' Deep – 5 EA
        - Catch Basins – 30" x 30" – 12 EA
- Existing Digester 1 & 2 – Allowance to Increase wall height by 5' feet.
- Parking Canopy – used historical costs.

Factored Costs:

- Special Coatings – 1%
- Exposed Pipe - 7%
- Electrical - 10%
- Instrumentation and Controls – 4%

Assumptions:

- This work will be completed uninterrupted, only one mobilization and demobilization per construction stage for the Prime Contractor and sub-contractor.
- This project will be worked on a standard work week.
- Project to be competitively bid, with a minimum of 3 bidders.
- All regulatory approvals will be obtained by others prior to mobilization.
- Subcontractors and trade labor can be procured locally or within a radius that does not require per diem upcharges.
- Location provides for sufficient lay-down and staging area.
- All procurement by the general contractor and its subcontractor's. No Owner Furnished, Contactor installed process equipment.

- Any/all environmental impact studies and associated permitting will be completed by others prior to mobilization.
- Water and Power for construction activities is available on site at no cost to the contractor.
- Contractor provides generator and fuel for duration of temporary dewatering facility operation
- Landfill for disposal of non-contaminated construction debris is within 10-mile round trip of the project site.
- Yard piping:
    - All buried pipe assumes 4 feet of cover.
    - All buried pipe assumes bedding material to 1' above the top of the pipe.
    - All process pipe assumed to be ductile iron pipe, except Foul Air is exposed fiberglass on T-rack foundations.
    - Only Scum pipe is assumed to be glassed lined.
    - Centrate Flow Control Vault – Assumed to be 10' wide x 10' long x 10' deep interior.
    - Assumed Foul Air is exposed Fiberglass Duct on T-Racks, 20' on center.
- BioFilters – assumed 2 cells each 20' x 50', and 7' walls.
- Operations and Maintenance Building:
    - Assumed 12" average concrete slab.
    - Split face CMU 12" Block – 18' High perimeter, 26' high at shop/maintenance area.
    - Steel frame shell.
    - Double Tee Roof
    - PVC built-up roof system.
    - Fire sprinkler system – assumed 100%, will be reviewed at 30% design.
    - Included a gravel 6" thick yard area 5,165 SF and chain-link fenced area 204' LF with 24' sliding gate.
- Parking Canopy – assumed 12" slab on grade.

Exclusions:

- Cost associated with accelerated schedules.
- All permits, regulatory fees, environmental fees or requirements and acquisition of such.
- Off-site storage facilities.
- Extended warranty costs.
- Extreme weather conditions that would affect working days/lost productivity.
- Cost increases related to recently imposed tariffs.
- Cost/work associated with hazardous and/or contaminated materials.
- Costs associated with endangered species mitigation.
- Cost associated with change orders during construction.
- Non-Construction Costs.
- Owner Costs.
- Rock excavation, crushing or removal from the project site.
- Site security.
- Cost associated with temporary construction power for work activities within the building or a construction compound.
- Spare Parts.
- Pile foundations under structures.

Central Kitsap Treatment Plant Solids Handling

Kitsap County

Roll Up Report

11/17/2023 4:03 PM

Design Stage: Basis of Design Report (15%) - Class 4

Estimate Version: Rev01 / 17-Nov-2023

Project name	**Kitsap Solids Handling 30_KAJ-01**
Estimator	KAJ, PB, KMJ
Labor rate table	HDR_2023_Union
Equipment rate table	HDR_EQ_2023
Project	Solids Digestion
Report format	Sorted by 'WBS_MAIN' 'WBS_MAIN' summary Allocate addons

Central Kitsap Treatment Plant Solids Handling

Kitsap County

Roll Up Report

11/17/2023 4:03 PM

Design Stage: Basis of Design Report (15%) - Class 4

Estimate Version: Rev01 / 17-Nov-2023

Description	Quantity		Labor Amount	Material Amount	Subcontract Amount	Equipment Amount	Other Amount	Total Unit Cost	Total Amount
006 SITEWORK			40,177	268,995	208,723	32,002			549,897
007 YARD PIPING	17,270.00	LF	2,305,901	2,293,250		790,666		312.091/LF	5,389,817
011 FACILITY OR BUILDING DEMOLITION	30.00	CY	22,473	10,250	823,471	8,341		28,817.867/CY	864,536
124 BIOFILTER - Septage Receiving	1.00	LS	169,549	621,347		20,222		811,117.57 /LS	811,118
125 BIOFILTER - Primary & Septage Thickening	1.00	LS	169,549	621,347		20,222		811,117.61 /LS	811,118
126 BIOFILTER - Centrate Storage	1.00	LS	169,549	621,347		20,222		811,117.62 /LS	811,118
162 CANOPY - PARKING & STORAGE	5,860.00	BSF	78,692	158,796	1,066,395	9,293		224.091/BSF	1,313,176
411 IN-PLANT PUMP STATION	1.00	LS	279,354	699,458	7,064	42,277	625	1,028,777.31 /LS	1,028,777
466 O&M BUILDING	21,040.00	BSF	1,835,012	2,584,931	2,488,739	149,274		335.454/BSF	7,057,957
500 CENTRATE STORAGE - EXISTING GRAV THICKENER	1.00	LS	1,137,785	488,804	522,503	66,807		2,215,900.27 /LS	2,215,900
546 EXISTING SOLIDS PROCESSING BUILDING	1.00	LS	11,429	127,264		5,454		144,147.91 /LS	144,148
547 PRIMARY SLUDGE & SEPTAGE BUILDING	5,258.00	BSF	827,795	3,107,467		112,305	6,317	770.993/BSF	4,053,883
599 DIGESTERS 1&2 - EXISTING	1.30	MG	999,005	1,992,241	2,092,754	150,307		4,026,389.37 /MG	5,234,306
600 DIGESTERS 3&4 - NEW W/ CONTROL BUILDING	1.40	MGD	3,370,141	6,053,796	54,594	408,610		7,062,243.164/MGD	9,887,140
630 DIGESTER CONTROL BUILDING	3,190.00	BSF	459,485	1,453,953		56,229		617.450/BSF	1,969,667
819 FOG RECEIVING BUILDING	1.00	LS	636,764	1,413,070		46,204	5,494	2,101,532.44 /LS	2,101,532
821 SEPTAGE HANDLING FACILITY	1.00	LS	722,139	3,179,445		108,762	1,127	4,011,473.07 /LS	4,011,473
823 SEPTAGE INFLUENT BOX	1.00	LS	176,042	152,587		8,376		337,005.53 /LS	337,006

AACE Classification Accuracy Range

Upper Range +50% **Lower Range -30%**

Central Kitsap Treatment Plant Solids Handling

Kitsap County

Roll Up Report

11/17/2023 4:03 PM

Design Stage: Basis of Design Report (15%) - Class 4

Estimate Version: Rev01 / 17-Nov-2023

Estimate Totals

Description	Amount	Totals	Rate
Labor	13,410,841		
Material	25,848,347		
Equipment	2,055,573		
Subcontract	7,264,244		
Other	13,563		
Subtotal Field Const Costs	**48,592,568**	**48,592,568**	
Sales Tax Estimate (Mat & Eq)	1,455,560		9.200 %
Subtotal Field Const Costs	**1,455,560**	**50,048,128**	
Design Contingency	14,484,110		30.000 %
Subtotal Field Const Costs	**14,484,110**	**64,532,238**	
Escalation Project (Year)	7,945,983		12.660 %
Construction Subtotal	**7,945,983**	**72,478,221**	
Market Volatility Adjustment Factor	1,449,564		2.000 %
Construction Total	**1,449,564**	**73,927,785**	
Special Coatings	947,792		1.000 %
Exposed Pipe	6,634,545		7.000 %
Electrical	9,477,921		10.000 %
Controls	3,791,169		4.000 %
Factored Costs	**20,851,427**	**94,779,212**	

AACE Classification Accuracy Range

Upper Range +50% **Lower Range -30%**

Central Kitsap Treatment Plant Solids Handling

Kitsap County

Summary Report

11/17/2023 4:04 PM

Design Stage: Basis of Design Report (15%) - Class 4

Estimate Version: Rev01 / 17-Nov-2023

Project name	**Kitsap Solids Handling 30_KAJ-01**
Estimator	KAJ, PB, KMJ
Labor rate table	HDR_2023_Union
Equipment rate table	HDR_EQ_2023
Project	Solids Digestion
Report format	Sorted by 'WBS_MAIN/MF04_DIV' 'MF04_DIV' summary Allocate addons

AACE Classification Accuracy Range

Upper Range +50% **Lower Range -30%**

Central Kitsap Treatment Plant Solids Handling

Kitsap County

Summary Report

11/17/2023 4:04 PM

Design Stage: Basis of Design Report (15%) - Class 4

Estimate Version: Rev01 / 17-Nov-2023

Description	Quantity		Labor Amount	Material Amount	Subcontract Amount	Equipment Amount	Other Amount	Total Unit Cost	Total Amount
006 SITEWORK									
DIVISION 32 EXTERIOR IMPROVEMENTS	1.00	LS	40,177	268,995	208,723	32,002		549,897.330/LS	549,897
006 SITEWORK			***40,177***	***268,995***	***208,723***	***32,002***			***549,897***
327.286 Labor hours									
188.193 Equipment hours									
007 YARD PIPING									
DIVISION 03 CONCRETE	42.00	CY	29,766	33,268		820		1,520.329/CY	63,854
DIVISION 05 METALS			577	1,054		33			1,665
DIVISION 08 OPENINGS	1.00	EA	2,421	6,944				9,364.09 /EA	9,364
DIVISION 33 UTILITIES (BURIED PIPE AND VALVES)	16,690.00	LF	2,178,992	1,822,828		785,799		286.856/LF	4,787,619
DIVISION 40 PROCESS INTEGRATION (EXPOSED PIPE, VALVES AND GATES)	570.00	LF	94,145	429,156		4,014		925.115/LF	527,315
007 YARD PIPING			***2,305,902***	***2,293,250***		***790,666***		***312.091/LF***	***5,389,817***
17,270.00 LF									
18,169.359 Labor hours									
10,293.642 Equipment hours									
011 FACILITY OR BUILDING DEMOLITION									
DIVISION 02 EXISTING CONDITIONS			22,473	10,250	823,471	8,341			864,536
011 FACILITY OR BUILDING DEMOLITION			***22,473***	***10,250***	***823,471***	***8,341***		***28,817.867/CY***	***864,536***
30.00 CY									
149.684 Labor hours									
149.684 Equipment hours									
124 BIOFILTER - Septage Receiving									
DIVISION 03 CONCRETE	207.00	CY	124,156	157,004		5,811		1,386.338/CY	286,972
DIVISION 44 POLLUTION CONTROL EQUIPMENT	3.00	EA	45,393	464,342		14,411		174,715.173/EA	524,146
124 BIOFILTER - Septage Receiving			***169,549***	***621,347***		***20,222***		***811,117.57 /LS***	***811,118***
1.00 LS									
1,356.005 Labor hours									
296.398 Equipment hours									
125 BIOFILTER - Primary & Septage Thickening									
DIVISION 03 CONCRETE	207.00	CY	124,156	157,004		5,811		1,386.339/CY	286,972
DIVISION 44 POLLUTION CONTROL EQUIPMENT	3.00	EA	45,393	464,342		14,411		174,715.177/EA	524,146
125 BIOFILTER - Primary & Septage Thickening			***169,549***	***621,347***		***20,222***		***811,117.61 /LS***	***811,118***
1.00 LS									
1,356.005 Labor hours									
296.398 Equipment hours									
126 BIOFILTER - Centrate Storage									
DIVISION 03 CONCRETE	207.00	CY	124,156	157,004		5,811		1,386.339/CY	286,972
DIVISION 44 POLLUTION CONTROL EQUIPMENT	3.00	EA	45,393	464,342		14,411		174,715.183/EA	524,146

AACE Classification Accuracy Range

Upper Range +50% **Lower Range -30%**

Central Kitsap Treatment Plant Solids Handling

Kitsap County

Summary Report

Description	Quantity		Labor Amount	Material Amount	Subcontract Amount	Equipment Amount	Other Amount	Total Unit Cost	Total Amount
126 BIOFILTER - Centrate Storage			***169,549***	***621,347***		***20,222***		***811,117.62 /LS***	***811,118***
1.00 LS									
1,356.005 Labor hours									
296.398 Equipment hours									
162 CANOPY - PARKING & STORAGE									
DIVISION 03 CONCRETE	218.00	CY	78,692	158,796		9,293		1,132.022/CY	246,781
DIVISION 05 METALS	1.00	LS			1,066,395			1,066,394.67 /LS	1,066,395
162 CANOPY - PARKING & STORAGE			***78,692***	***158,796***	***1,066,395***	***9,293***		***224.091/BSF***	***1,313,176***
5,860.00 BSF									
641.114 Labor hours									
148.639 Equipment hours									
411 IN-PLANT PUMP STATION									
DIVISION 03 CONCRETE	33.00	CY	34,574	27,595		782		1,907.619/CY	62,951
DIVISION 08 OPENINGS	2.00	EA	978	8,963				4,970.270/EA	9,941
DIVISION 31 EARTHWORK	1,690.00	CY	130,738	44,184		9,902		109.363/CY	184,824
DIVISION 33 UTILITIES (BURIED PIPE AND VALVES)	20.00	LF	104,681	497,711		29,889		31,614.073/LF	632,281
DIVISION 43 PROCESS GAS & LIQUID HANDLING, PURIFICATION & STORAGE EQUIPMENT	2.00	EA	8,383	121,004	7,064	1,704	625	69,390.010/EA	138,780
411 IN-PLANT PUMP STATION			***279,354***	***699,457***	***7,064***	***42,277***	***625***	***1,028,777.31 /LS***	***1,028,777***
1.00 LS									
2,098.139 Labor hours									
407.926 Equipment hours									
466 O&M BUILDING									
DIVISION 03 CONCRETE	780.00	CY	319,813	1,082,822		49,898		1,862.222/CY	1,452,533
DIVISION 04 MASONRY			869,396	570,679		13,573			1,453,647
DIVISION 05 METALS			71,295	404,034		20,366			495,696
DIVISION 07 THERMAL, MOISTURE PROTECTION	21,040.00	SF	184,991	142,618				15.571/SF	327,609
DIVISION 08 OPENINGS	36.00	EA	76,636	215,022				8,101.629/EA	291,659
DIVISION 09 FINISHES			121,864	33,683	574,324				729,872
DIVISION 21 FIRE SUPPRESSION			101,028	78,635		110			179,773
DIVISION 22 PLUMBING	21,040.00	BSF			765,766			36.396/BSF	765,766
DIVISION 23 HEATING, VENTILATING & AIR-CONDITIONING (HVAC)	21,040.00	BSF			1,148,649			54.594/BSF	1,148,649
DIVISION 31 EARTHWORK	8,650.00	CY	62,209	22,565		59,694		16.702/CY	144,469
DIVISION 32 EXTERIOR IMPROVEMENTS	1.00	LS	10,921	12,150		5,634		28,705.43 /LS	28,705
DIVISION 41 MATERIAL PROCESSING & HANDLING EQUIPMENT	200.00	LF	16,858	22,721				197.892/LF	39,578
466 O&M BUILDING			***1,835,012***	***2,584,931***	***2,488,739***	***149,274***		***335.454/BSF***	***7,057,957***
21,040.00 BSF									
14,194.323 Labor hours									
1,394.493 Equipment hours									
500 CENTRATE STORAGE - EXISTING GRAV THICKENER									
DIVISION 03 CONCRETE	166.892	CY	144,704	126,853		3,995		1,651.083/CY	275,552
DIVISION 05 METALS	1.00	LS	1,668	4,085		97		5,850.45 /LS	5,850
DIVISION 07 THERMAL, MOISTURE PROTECTION	2,219.00	SF	26,702	58,639		1,634		39.196/SF	86,976
DIVISION 31 EARTHWORK	4,530.00	CY	964,710	299,227		61,081		292.499/CY	1,325,018
DIVISION 46 WATER AND WASTEWATER EQUIPMENT	1.00	EA			522,503			522,503.31 /EA	522,503

Central Kitsap Treatment Plant Solids Handling

Kitsap County

Summary Report

Description	Quantity		Labor Amount	Material Amount	Subcontract Amount	Equipment Amount	Other Amount	Total Unit Cost	Total Amount
500 CENTRATE STORAGE - EXISTING GRAV THICKENER			***1,137,785***	***488,804***	***522,503***	***66,807***		***2,215,900.27 /LS***	***2,215,900***
1.00 LS									
8,774.821 Labor hours									
523.596 Equipment hours									
546 EXISTING SOLIDS PROCESSING BUILDING									
DIVISION 46 WATER AND WASTEWATER EQUIPMENT	4.00	EA	11,429	127,264		5,454		36,036.978/EA	144,148
546 EXISTING SOLIDS PROCESSING BUILDING			***11,429***	***127,264***		***5,454***		***144,147.91 /LS***	***144,148***
1.00 LS									
96.00 Labor hours									
32.00 Equipment hours									
547 PRIMARY SLUDGE & SEPTAGE BUILDING									
DIVISION 03 CONCRETE	699.00	CY	489,156	675,871		26,916		1,705.212/CY	1,191,943
DIVISION 07 THERMAL, MOISTURE PROTECTION	5,258.00	SF	64,712	43,902				20.657/SF	108,614
DIVISION 08 OPENINGS	6.00	EA	14,426	44,557				9,830.562/EA	58,983
DIVISION 31 EARTHWORK	3,850.00	CY	35,919	8,225		34,990		20.554/CY	79,135
DIVISION 46 WATER AND WASTEWATER EQUIPMENT	21.00	EA	223,582	2,334,911		50,399	6,317	124,533.703/EA	2,615,208
547 PRIMARY SLUDGE & SEPTAGE BUILDING			***827,795***	***3,107,467***		***112,305***	***6,317***	***770.993/BSF***	***4,053,883***
5,258.00 BSF									
6,463.158 Labor hours									
1,278.451 Equipment hours									
599 DIGESTERS 1&2 - EXISTING									
DIVISION 03 CONCRETE	778.00	CY	659,369	616,917		11,346		1,655.054/CY	1,287,632
DIVISION 13 SPECIAL CONSTRUCTION			175,760		2,092,754	83,710			2,352,224
DIVISION 46 WATER AND WASTEWATER EQUIPMENT	8.00	EA	163,876	1,375,323		55,251		199,306.198/EA	1,594,450
599 DIGESTERS 1&2 - EXISTING			***999,005***	***1,992,241***	***2,092,754***	***150,307***		***4,026,389.369/MG***	***5,234,306***
1.30 MG									
7,969.205 Labor hours									
891.709 Equipment hours									
600 DIGESTERS 3&4 - NEW W/ CONTROL BUILDING									
DIVISION 03 CONCRETE	2,005.00	CY	1,214,819	1,502,678		43,602		1,377.106/CY	2,761,098
DIVISION 04 MASONRY			25,308	17,071		393			42,772
DIVISION 05 METALS			23,549	144,584		1,366			169,499
DIVISION 07 THERMAL, MOISTURE PROTECTION	243.00	SF	7,769	4,279				49.580/SF	12,048
DIVISION 08 OPENINGS	3.00	EA	6,588	19,609				8,732.557/EA	26,198
DIVISION 13 SPECIAL CONSTRUCTION			113,512	2,409,048	54,594	66,495			2,643,649
DIVISION 31 EARTHWORK	27,305.00	CY	1,814,721	581,203		241,503		96.591/CY	2,637,427
DIVISION 46 WATER AND WASTEWATER EQUIPMENT	8.00	EA	163,876	1,375,323		55,251		199,306.199/EA	1,594,450
600 DIGESTERS 3&4 - NEW W/ CONTROL BUILDING			***3,370,142***	***6,053,796***	***54,594***	***408,609***		***7,062,243.164/MGD***	***9,887,140***
1.40 MGD									
26,371.179 Labor hours									
3,050.224 Equipment hours									
630 DIGESTER CONTROL BUILDING									

AACE Classification Accuracy Range

Upper Range +50% **Lower Range -30%**

Central Kitsap Treatment Plant Solids Handling

Kitsap County

Summary Report

Description	Quantity		Labor Amount	Material Amount	Subcontract Amount	Equipment Amount	Other Amount	Total Unit Cost	Total Amount
DIVISION 03 CONCRETE	434.00	CY	325,137	419,952		15,305		1,752.059/CY	760,394
DIVISION 07 THERMAL, MOISTURE PROTECTION	3,190.00	SF	44,127	28,933				22.903/SF	73,060
DIVISION 08 OPENINGS	5.00	EA	11,605	35,291				9,379.15 /EA	46,896
DIVISION 31 EARTHWORK	2,735.00	CY	22,026	6,697		21,333		18.302/CY	50,055
DIVISION 46 WATER AND WASTEWATER EQUIPMENT	2.00	EA	56,591	963,080		19,591		519,631.075/EA	1,039,262
630 DIGESTER CONTROL BUILDING			***459,485***	***1,453,953***		***56,229***		***617.450/BSF***	***1,969,667***
3,190.00 BSF									
3,696.267 Labor hours									
774.807 Equipment hours									
819 FOG RECEIVING BUILDING									
DIVISION 03 CONCRETE	288.00	CY	257,973	257,833		8,471		1,820.404/CY	524,276
DIVISION 05 METALS	1.00	LS	2,092	12,546		121		14,758.50 /LS	14,759
DIVISION 07 THERMAL, MOISTURE PROTECTION	1,258.00	SF	23,660	20,942				35.455/SF	44,602
DIVISION 08 OPENINGS	7.00	EA	13,813	41,756				7,938.333/EA	55,568
DIVISION 31 EARTHWORK	2,360.00	CY	254,864	80,799		14,188		148.242/CY	349,850
DIVISION 46 WATER AND WASTEWATER EQUIPMENT	10.00	EA	84,362	999,196		23,425	5,494	111,247.698/EA	1,112,477
819 FOG RECEIVING BUILDING			***636,764***	***1,413,070***		***46,205***	***5,494***	***2,101,532.44 /LS***	***2,101,532***
1.00 LS									
4,980.397 Labor hours									
500.473 Equipment hours									
821 SEPTAGE HANDLING FACILITY									
DIVISION 03 CONCRETE	181.40	CY	204,866	278,304		8,691		2,711.471/CY	491,861
DIVISION 07 THERMAL, MOISTURE PROTECTION	1,515.00	SF	28,981	37,232				43.705/SF	66,213
DIVISION 08 OPENINGS	6.00	EA	2,641	16,546				3,197.808/EA	19,187
DIVISION 31 EARTHWORK	8,465.00	CY	360,518	115,101		58,246		63.067/CY	533,866
DIVISION 33 UTILITIES (BURIED PIPE AND VALVES)			3,229	8,189		1,742			13,160
DIVISION 40 PROCESS INTEGRATION (EXPOSED PIPE, VALVES AND GATES)			7,719	33,811		2,866			44,395
DIVISION 46 WATER AND WASTEWATER EQUIPMENT	12.00	EA	114,186	2,690,261		37,217	1,127	236,899.277/EA	2,842,791
821 SEPTAGE HANDLING FACILITY			***722,139***	***3,179,445***		***108,762***	***1,127***	***4,011,473.07 /LS***	***4,011,473***
1.00 LS									
5,629.868 Labor hours									
1,037.811 Equipment hours									
823 SEPTAGE INFLUENT BOX									
DIVISION 03 CONCRETE	235.68	CY	52,914	107,962		5,989		708.015/CY	166,865
DIVISION 05 METALS			182	3,061		11			3,253
DIVISION 31 EARTHWORK	665.00	CY	122,947	41,564		2,377		250.959/CY	166,887
823 SEPTAGE INFLUENT BOX			***176,042***	***152,587***		***8,376***		***337,005.53 /LS***	***337,006***
1.00 LS									
1,374.737 Labor hours									
118.293 Equipment hours									

Central Kitsap Treatment Plant Solids Handling

Kitsap County

Summary Report

11/17/2023 4:04 PM

Design Stage: Basis of Design Report (15%) - Class 4

Estimate Version: Rev01 / 17-Nov-2023

Estimate Totals

Description	Amount	Totals	Rate
Labor	13,410,842		
Material	25,848,347		
Equipment	2,055,573		
Subcontract	7,264,244		
Other	13,563		
Subtotal Field Const Costs	**48,592,569**	**48,592,569**	
Sales Tax Estimate (Mat & Eq)	1,455,560		9.200 %
Subtotal Field Const Costs	**1,455,560**	**50,048,129**	
Design Contingency	14,484,110		30.000 %
Subtotal Field Const Costs	**14,484,110**	**64,532,239**	
Escalation Project (Year)	7,945,983		12.660 %
Construction Subtotal	**7,945,983**	**72,478,222**	
Market Volatility Adjustment Factor	1,449,564		2.000 %
Construction Total	**1,449,564**	**73,927,786**	
Special Coatings	947,792		1.000 %
Exposed Pipe	6,634,545		7.000 %
Electrical	9,477,921		10.000 %
Controls	3,791,169		4.000 %
Factored Costs	**20,851,427**	**94,779,213**	

AACE Classification Accuracy Range

Upper Range +50% **Lower Range -30%**

Central Kitsap Treatment Plant Solids Handling

Kitsap County

Work Activity Report

11/17/2023 4:04 PM

Design Stage: Basis of Design Report (15%) - Class 4

Estimate Version: Rev01 / 17-Nov-2023

Project name	**Kitsap Solids Handling 30_KAJ-01**
Estimator	KAJ, PB, KMJ
Labor rate table	HDR_2023_Union
Equipment rate table	HDR_EQ_2023
Project	Solids Digestion
Report format	Sorted by 'WBS_MAIN/MF04_DIV/Work Activity' 'Work Activity' summary Allocate addons

Central Kitsap Treatment Plant Solids Handling

Kitsap County

Work Activity Report

11/17/2023 4:04 PM

Design Stage: Basis of Design Report (15%) - Class 4

Estimate Version: Rev01 / 17-Nov-2023

Description	Quantity		Labor Amount	Material Amount	Subcontract Amount	Equipment Amount	Other Amount	Total Unit Cost	Total Amount
006 SITEWORK									
DIVISION 32	**EXTERIOR IMPROVEMENTS**								
32.12.16.005 Access Road Around New Maintenance Building	2,155.556	SY	35,316	129,054		31,513		90.873/SY	195,883
32.13.13.005 Concrete Paving - Process Area Allowance	800.00	SY	4,861	139,942		489		181.614/SY	145,291
32.99.00.P005 Scope Allowance - Exterior Improvements	1.00	LS			208,723			208,723.25 /LS	208,723
DIVISION 32 EXTERIOR IMPROVEMENTS			**40,177**	**268,995**	**208,723**	**32,002**		**549,897.330/LS**	**549,897**
1.00 LS									
327.286 Labor hours									
188.193 Equipment hours									
006 SITEWORK			***40,177***	***268,995***	***208,723***	***32,002***	***0***		***549,897***
327.286 Labor hours									
188.193 Equipment hours									
007 YARD PIPING									
DIVISION 03	**CONCRETE**								
03.11.13.500 Centrate Flow Control Vault - Base Slab - 14' x 14' x 24" Thick	15.00	CY	5,332	10,550		424		1,087.022/CY	16,305
03.11.13.505 Centrate Flow Control Vault - Walls - 40' LF x 10' High x 18" Thick	23.00	CY	20,691	18,762		335		1,729.947/CY	39,789
03.11.13.510 Centrate Flow Control Vault - Walls - 10' x 12' x 12" Thick	4.00	CY	3,743	3,956		61		1,939.923/CY	7,760
DIVISION 03 CONCRETE			**29,766**	**33,268**		**820**		**1,520.329/CY**	**63,854**
42.00 CY									
244.218 Labor hours									
13.265 Equipment hours									
DIVISION 05	**METALS**								
05.50.00.005 Centrate Flow Control Vault - Aluminum Ladder - 10' High	10.00	LF	577	1,054		33		166.457/LF	1,665
DIVISION 05 METALS			**577**	**1,054**		**33**			**1,665**
3.765 Labor hours									
0.941 Equipment hours									
DIVISION 08	**OPENINGS**								
08.31.00.005 Centrate Flow Control Vault - Double Leaf Access Door - 4' x 4'	1.00	EA	2,421	6,944				9,364.09 /EA	9,364
DIVISION 08 OPENINGS			**2,421**	**6,944**				**9,364.09 /EA**	**9,364**
1.00 EA									
16.00 Labor hours									
DIVISION 33	**UTILITIES (BURIED PIPE AND VALVES)**								
33.05.16.005 Septage Bypass - Precast Manhole - 60" Dia - 10' Deep	1.00	EA	3,595	11,398		510		15,503.21 /EA	15,503
33.05.17.005 Potable Water - W1 - Copper - 2" Dia - Allowance	2,000.00	LF	219,150	235,734		48,677		251.781/LF	503,561
33.05.18.005 Natural Gas Pipe - Steel - 3" Dia - Allowance	2,000.00	LF	335,003	162,824		65,318		281.573/LF	563,145
33.05.19.005 D Drain Pipe - Ductile Iron - 04" Dia	20.00	LF	7,130	2,615		4,227		698.61 /LF	13,972
33.05.19.010 D Drain Pipe - Ductile Iron - 06" Dia	135.00	LF	12,896	13,242		7,121		246.359/LF	33,258
33.05.19.015 D Drain Pipe - Ductile Iron - 08" Dia	45.00	LF	9,267	7,574		4,999		485.311/LF	21,839
33.05.19.025 FOG - Fat, Oil and Grease - Ductile Iron - 04" Dia	1,415.00	LF	119,523	121,028		69,155		218.873/LF	309,706
33.05.19.030 Primary Sludge - Ductile Iron - 06" Dia	1,125.00	LF	101,256	96,660		57,864		227.360/LF	255,780
33.05.19.035 Scum - Ductile Iron - 04" Dia	250.00	LF	34,806	57,599		20,652		452.230/LF	113,057

AACE Classification Accuracy Range

Upper Range +50% **Lower Range -30%**

Central Kitsap Treatment Plant Solids Handling

Kitsap County

Work Activity Report

Description	Quantity		Labor Amount	Material Amount	Subcontract Amount	Equipment Amount	Other Amount	Total Unit Cost	Total Amount
33.05.19.040 Septage - Ductile Iron - 04" Dia	435.00	LF	42,479	38,147		24,746		242.236/LF	105,373
33.05.19.045 Septage Bypass - Ductile Iron - 04" Dia	300.00	LF	36,786	27,533		21,757		286.922/LF	86,077
33.05.19.050 Septage Bypass - Ductile Iron - 08" Dia	325.00	LF	41,218	38,084		23,637		316.734/LF	102,939
33.05.19.055 Sludge Transfer - Ductile Iron - 06" Dia	200.00	LF	27,367	17,621		16,243		306.152/LF	61,230
33.05.19.060 Thickened Sludge - Ductile Iron - 06" Dia	400.00	LF	42,870	33,107		24,942		252.296/LF	100,918
33.05.19.066 TWAS - Thickened Waste Activated Sludge - Ductile Iron - 06" Dia	275.00	LF	37,404	24,120		21,881		303.290/LF	83,405
33.05.19.070 WAS - Waste Activated Sludge - Ductile Iron - 06" Dia	565.00	LF	63,057	49,356		36,526		263.609/LF	148,939
33.05.24.005 Hot Water Supply and Return - Steel - 8" Dia - Allowance	1,200.00	LF	459,232	332,732		120,174		760.115/LF	912,137
33.05.31.005 Sanitary Sewer - PVC SDR 35 - 08" - Allowance	2,000.00	LF	166,090	183,791		61,653		205.767/LF	411,534
33.05.31.010 Non-Potable Washdown Water - PVC - 4" Dia - Allowance	2,000.00	LF	169,222	118,435		55,317		171.487/LF	342,974
33.05.39.004 Storm Water Pipe - RCP - 12" Dia - Allowance	1,000.00	LF	92,776	77,451		38,029		208.256/LF	208,256
33.05.39.010 Storm Water Pipe - RCP - 18" Dia - Allowance	1,000.00	LF	128,954	99,956		57,741		286.651/LF	286,651
33.05.39.015 Storm Water Pipe - Precast Manholes - 48" Dia x 10' Deep - Allowance	5.00	EA	17,599	41,757		2,490		12,369.14 /EA	61,846
33.05.39.020 Storm Water Pipe - Precast Catch Basins - Allowance	12.00	EA	11,311	32,065		2,141		3,793.118/EA	45,517
DIVISION 33 UTILITIES (BURIED PIPE AND VALVES)			**2,178,993**	**1,822,828**		**785,799**		**286.856/LF**	**4,787,619**
16,690.00 LF									
17,267.001 Labor hours									
10,238.610 Equipment hours									
DIVISION 40	**PROCESS INTEGRATION (EXPOSED PIPE, VALVES AND GATES)**								
40.10.15.006 Foul Air - Odor Control - FRP Duct - 06" Dia - On Racks	270.00	LF	36,785	112,428		2,929		563.491/LF	152,142
40.10.15.018 Foul Air - Odor Control - FRP Duct - 18" Dia - On Racks	100.00	LF	20,128	74,083		1,085		952.962/LF	95,296
40.10.15.020 Foul Air - Odor Control - FRP Duct - 20" Dia - On Racks	200.00	LF	37,231	242,645				1,399.384/LF	279,877
DIVISION 40 PROCESS INTEGRATION (EXPOSED PIPE, VALVES AND GATES)			**94,145**	**429,156**		**4,014**		**925.115/LF**	**527,315**
570.00 LF									
638.376 Labor hours									
40.826 Equipment hours									
007 YARD PIPING			***2,305,902***	***2,293,250***	***0***	***790,666***	***0***	***312.091/LF***	***5,389,817***
17,270.00 LF									
18,169.359 Labor hours									
10,293.642 Equipment hours									
011 FACILITY OR BUILDING DEMOLITION									
DIVISION 02	**EXISTING CONDITIONS**								
02.41.00.022 Demo asphalt paving	150.00	SY	2,341	7		1,011		22.397/SY	3,360
02.41.00.023 Demo concrete paving - new building footprint	30.00	CY	10,679			1,296		399.179/CY	11,975
02.41.00.024 Demo Storm Drain	40.00	LF	5,700			2,259		198.989/LF	7,960
02.41.00.090 Load and Haul Demo materials offsite - Site Demo	130.00	Ton	3,753	10,243		3,775		136.693/Ton	17,770
02.41.14.052 Demo Exist Septage Receiving	2,600.00	SF			118,286			45.495/SF	118,286
02.41.14.053 Demo Exist Digester Control Building					106,457				106,457
02.41.14.054 Demo Exist Fuel Tank (DIG 1 & 2)	1.00	LS			27,297			27,296.80 /LS	27,297
02.41.14.056 Demo Exist O&M Building					290,547				290,547
02.41.14.058 Demo Building in New O&M Building Footprint	7,090.00	SF			193,534			27.297/SF	193,534
02.41.14.060 Demo Existing Gravidy Thickener Cover					49,134				49,134
02.41.14.062 Demo existing in-plant pump station					38,216				38,216
DIVISION 02 EXISTING CONDITIONS			**22,473**	**10,250**	**823,471**	**8,341**			**864,536**
149.684 Labor hours									
149.684 Equipment hours									

AACE Classification Accuracy Range

Upper Range +50% **Lower Range -30%**

Central Kitsap Treatment Plant Solids Handling

Kitsap County

Work Activity Report

Description	Quantity		Labor Amount	Material Amount	Subcontract Amount	Equipment Amount	Other Amount	Total Unit Cost	Total Amount
011 FACILITY OR BUILDING DEMOLITION			***22,473***	***10,250***	***823,471***	***8,341***	***0***	***28,817.867/CY***	***864,536***
30.00 CY									
149.684 Labor hours									
149.684 Equipment hours									
124 BIOFILTER - Septage Receiving									
DIVISION 03	**CONCRETE**								
03.11.13.P015 Biofilter - Base Slab - 18" Thick - 47' Wide x 56' Long	147.00	CY	48,498	103,787		4,936		1,069.536/CY	157,222
03.11.13.P020 Biofilter - Walls - 230' LF x 7' High x 18" Thick			75,658	53,217		875			129,750
DIVISION 03 CONCRETE			**124,156**	**157,004**		**5,811**		**1,386.338/CY**	**286,972**
207.00 CY									
1,016.005 Labor hours									
90.398 Equipment hours									
DIVISION 44	**POLLUTION CONTROL EQUIPMENT**								
44.31.21.005 Inorganic biofilter	1.00	EA	37,515	343,957		11,773		393,246.02 /EA	393,246
44.31.21.010 Odor Control Blowers	2.00	EA	7,877	120,385		2,637		65,449.75 /EA	130,899
DIVISION 44 POLLUTION CONTROL EQUIPMENT			**45,393**	**464,342**		**14,411**		**174,715.173/EA**	**524,146**
3.00 EA									
340.00 Labor hours									
206.00 Equipment hours									
124 BIOFILTER - Septage Receiving			***169,549***	***621,347***	***0***	***20,222***	***0***	***811,117.57 /LS***	***811,118***
1.00 LS									
1,356.005 Labor hours									
296.398 Equipment hours									
125 BIOFILTER - Primary & Septage Thickening									
DIVISION 03	**CONCRETE**								
03.11.13.P015 Biofilter - Base Slab - 18" Thick - 47' Wide x 56' Long	147.00	CY	48,498	103,787		4,936		1,069.536/CY	157,222
03.11.13.P020 Biofilter - Walls - 230' LF x 7' High x 18" Thick			75,658	53,217		875			129,750
DIVISION 03 CONCRETE			**124,156**	**157,004**		**5,811**		**1,386.339/CY**	**286,972**
207.00 CY									
1,016.005 Labor hours									
90.398 Equipment hours									
DIVISION 44	**POLLUTION CONTROL EQUIPMENT**								
44.31.21.005 Inorganic biofilter	1.00	EA	37,515	343,957		11,773		393,246.03 /EA	393,246
44.31.21.010 Odor Control Blowers	2.00	EA	7,877	120,385		2,637		65,449.75 /EA	130,900

Central Kitsap Treatment Plant Solids Handling

Kitsap County

Work Activity Report

Description	Quantity	Labor Amount	Material Amount	Subcontract Amount	Equipment Amount	Other Amount	Total Unit Cost	Total Amount
DIVISION 44 POLLUTION CONTROL EQUIPMENT		**45,393**	**464,342**		**14,411**		**174,715.177/EA**	**524,146**
3.00 EA								
340.00 Labor hours								
206.00 Equipment hours								
125 BIOFILTER - Primary & Septage Thickening		***169,549***	***621,347***	***0***	***20,222***	***0***	***811,117.61 /LS***	***811,118***
1.00 LS								
1,356.005 Labor hours								
296.398 Equipment hours								
126 BIOFILTER - Centrate Storage								
DIVISION 03	**CONCRETE**							
03.11.13.P015 Biofilter - Base Slab - 18" Thick - 47' Wide x 56' Long	147.00 CY	48,498	103,787		4,936		1,069.536/CY	157,222
03.11.13.P020 Biofilter - Walls - 230' LF x 7' High x 18" Thick		75,658	53,217		875			129,750
DIVISION 03 CONCRETE		**124,156**	**157,004**		**5,811**		**1,386.339/CY**	**286,972**
207.00 CY								
1,016.005 Labor hours								
90.398 Equipment hours								
DIVISION 44	**POLLUTION CONTROL EQUIPMENT**							
44.31.21.005 Inorganic biofilter	1.00 EA	37,515	343,957		11,773		393,246.03 /EA	393,246
44.31.21.010 Odor Control Blowers	2.00 EA	7,877	120,385		2,637		65,449.76 /EA	130,900
DIVISION 44 POLLUTION CONTROL EQUIPMENT		**45,393**	**464,342**		**14,411**		**174,715.183/EA**	**524,146**
3.00 EA								
340.00 Labor hours								
206.00 Equipment hours								
126 BIOFILTER - Centrate Storage		***169,549***	***621,347***	***0***	***20,222***	***0***	***811,117.62 /LS***	***811,118***
1.00 LS								
1,356.005 Labor hours								
296.398 Equipment hours								
162 CANOPY - PARKING & STORAGE								
DIVISION 03	**CONCRETE**							
03.11.13.P010 O & M Building - Parking Canopy Slab - 12" Thick - 5,860 SF	218.00 CY	78,692	158,796		9,293		1,132.022/CY	246,781
DIVISION 03 CONCRETE		**78,692**	**158,796**		**9,293**		**1,132.022/CY**	**246,781**
218.00 CY								
641.114 Labor hours								
148.639 Equipment hours								
DIVISION 05	**METALS**							
05.50.00.P005 O & M Building - Parking Metal Canopy - 5,860 SF	5,860.00 BSF			1,066,395			181.979/BSF	1,066,395

AACE Classification Accuracy Range

Upper Range +50% **Lower Range -30%**

Central Kitsap Treatment Plant Solids Handling

Kitsap County

Work Activity Report

Description	Quantity		Labor Amount	Material Amount	Subcontract Amount	Equipment Amount	Other Amount	Total Unit Cost	Total Amount
DIVISION 05 METALS					**1,066,395**			**1,066,394.67 /LS**	**1,066,395**
1.00 LS									
162 CANOPY - PARKING & STORAGE			***78,692***	***158,796***	***1,066,395***	***9,293***	***0***	***224.091/BSF***	***1,313,176***
5,860.00 BSF									
641.114 Labor hours									
148.639 Equipment hours									
411 IN-PLANT PUMP STATION									
DIVISION 03	**CONCRETE**								
03 11 13.305.05 Elevated Vault Slab, 16" Thick x 75 SF	4.00	CY	1,651	2,901		134		1,171.558/CY	4,686
03 11 13.305.10 Elevated Slab, 16" Thick x 78 SF	4.00	CY	1,667	2,904		134		1,176.433/CY	4,706
03 11 13.503.05 Vault Foundation Slab, 10" Thick x 75 SF	3.00	CY	1,262	2,212		118		1,197.04 /CY	3,591
03 11 13.505.15 Foundation Slab, 16" Thick x 79 SF	4.00	CY	1,673	2,905		134		1,178.033/CY	4,712
03 11 13.801.05 Concrete Wall, 14'-5" High x 8" Wide x 27 LF	10.00	CY	16,989	9,343		146		2,647.747/CY	26,477
03 11 13.803.15 Vault Concrete Wall, 8' High x 10 Thick x 31 LF	8.00	CY	11,332	7,330		117		2,347.345/CY	18,779
DIVISION 03 CONCRETE			**34,574**	**27,596**		**782**		**1,907.619/CY**	**62,951**
33.00 CY									
285.263 Labor hours									
12.650 Equipment hours									
DIVISION 08	**OPENINGS**								
08 31 00.005.05 Access Hatch 3' x 3'	1.00	EA	440	2,758				3,197.81 /EA	3,198
08 31 00.015.05 Access Hatch 5' x 5'	1.00	EA	538	6,205				6,742.73 /EA	6,743
DIVISION 08 OPENINGS			**978**	**8,963**				**4,970.270/EA**	**9,941**
2.00 EA									
6.465 Labor hours									
DIVISION 31	**EARTHWORK**								
31.23.10.P005 Excavation, Backfill, and Haul Off-Site	1,690.00	CY	10,389	4,877		9,902		14.892/CY	25,168
31.23.19.P005 Well Point Detwatering - 2 Months	2.00	MO	120,349	39,307				79,828.11 /MO	159,656
DIVISION 31 EARTHWORK			**130,738**	**44,184**		**9,902**		**109.363/CY**	**184,824**
1,690.00 CY									
998.201 Labor hours									
62.118 Equipment hours									
DIVISION 33	**UTILITIES (BURIED PIPE AND VALVES)**								
33.32.13.005 Plant wastewater - in plant pumps	2.00	EA	104,681	497,711		29,889		316,140.73 /EA	632,281
DIVISION 33 UTILITIES (BURIED PIPE AND VALVES)			**104,681**	**497,711**		**29,889**		**31,614.073/LF**	**632,281**
20.00 LF									
742.211 Labor hours									
321.158 Equipment hours									
DIVISION 43	**PROCESS GAS & LIQUID HANDLING, PURIFICATION & STORAGE EQUIPMENT**								

AACE Classification Accuracy Range

Upper Range +50% **Lower Range -30%**

Central Kitsap Treatment Plant Solids Handling

Kitsap County

Work Activity Report

Description	Quantity		Labor Amount	Material Amount	Subcontract Amount	Equipment Amount	Other Amount	Total Unit Cost	Total Amount
32.24.11.P005 In-Plant Pump Station - Subermible Pumps - 10 HP	2.00	EA	8,383	121,004	7,064	1,704	625	69,390.010/EA	138,780
DIVISION 43 PROCESS GAS & LIQUID HANDLING, PURIFICATION & STORAGE EQUIPMENT			**8,383**	**121,004**	**7,064**	**1,704**	**625**	**69,390.010/EA**	**138,780**
2.00 EA									
66.00 Labor hours									
12.00 Equipment hours									
411 IN-PLANT PUMP STATION			***279,354***	***699,458***	***7,064***	***42,277***	***625***	***1,028,777.31 /LS***	***1,028,777***
1.00 LS									
2,098.139 Labor hours									
407.926 Equipment hours									

466 O&M BUILDING

DIVISION 03	**CONCRETE**								
03 41 33.000.05 Double Tee Roof, 21,040 SF		21,040.00	SF	42,467	515,626		16,610	27.315/SF	574,703
03.11.13.P005 O & M Building Base Slab - 12" Thick - 21,040 SF		780.00	CY	277,346	567,196		33,288	1,125.423/CY	877,830
DIVISION 03 CONCRETE				**319,813**	**1,082,822**		**49,898**	**1,862.222/CY**	**1,452,533**
780.00 CY									
2,573.847 Labor hours									
567.753 Equipment hours									
DIVISION 04	**MASONRY**								
04.22.00.P005 O & M Building - Split Face CMU - 18' High x 720' - Exterior Walls		12,960.00	SF	489,149	321,710		7,640	63.156/SF	818,499
04.22.00.P010 O & M Building - Split Face CMU - 26' High x 391' LF - Shop Area		10,166.00	SF	380,247	248,969		5,932	62.478/SF	635,149
DIVISION 04 MASONRY				**869,396**	**570,679**		**13,573**		**1,453,647**
6,902.947 Labor hours									
297.621 Equipment hours									
DIVISION 05	**METALS**								
05 12 00.000.05 Structural Frame Allowance		2,040.00	SF	71,295	404,034		20,366	242.988/SF	495,696
DIVISION 05 METALS				**71,295**	**404,034**		**20,366**		**495,696**
478.138 Labor hours									
99.982 Equipment hours									
DIVISION 07	**THERMAL, MOISTURE PROTECTION**								
07.51.00.P005 O & M Building - PVC Built-Up Roofing		21,040.00	SF	184,991	142,618			15.571/SF	327,609
DIVISION 07 THERMAL, MOISTURE PROTECTION				**184,991**	**142,618**			**15.571/SF**	**327,609**
21,040.00 SF									
1,488.407 Labor hours									
DIVISION 08	**OPENINGS**								
08.11.16.P005 O & M Building - Exterior Doors - 6' x 7'		3.00	EA	6,588	21,530			9,372.75 /EA	28,118
08.11.16.P010 O & M Building - Interior Doors - 6' x 7'		12.00	EA	26,353	78,438			8,732.557/EA	104,791
08.11.16.P015 O & M Building - Interior Doors - 3' x 7'		17.00	EA	25,621	59,746			5,021.618/EA	85,368
08.33.23.P005 O & M Building - Overhead Doors - 14' x 14'		4.00	EA	18,074	55,308			18,345.553/EA	73,382

Central Kitsap Treatment Plant Solids Handling

Kitsap County

Work Activity Report

Description		Quantity		Labor Amount	Material Amount	Subcontract Amount	Equipment Amount	Other Amount	Total Unit Cost	Total Amount
DIVISION 08 OPENINGS				**76,636**	**215,023**				**8,101.629/EA**	**291,659**
36.00 EA										
524.884 Labor hours										
DIVISION 09	**FINISHES**									
09 29 00.001.10 Building Allowance Cost		21,040.00	SF	46,483		574,324			29.506/SF	620,808
09.29.00.P005 O & M Building - Interior Walls - 10' HIgh x 1,000 LF		10,000.00	SF	75,381	33,683				10.906/SF	109,065
DIVISION 09 FINISHES				**121,864**	**33,683**	**574,324**				**729,872**
882.566 Labor hours										
DIVISION 21	**FIRE SUPPRESSION**									
21.10.00.P005 O & M Building - Wet Based Fire Protection				101,028	78,635		110			179,773
DIVISION 21 FIRE SUPPRESSION				**101,028**	**78,635**		**110**			**179,773**
641.463 Labor hours										
4.264 Equipment hours										
DIVISION 22	**PLUMBING**									
22 05 03.300.05 Building Plumbing Allowance		21,040.00	BSF			765,766			36.396/BSF	765,766
DIVISION 22 PLUMBING						**765,766**			**36.396/BSF**	**765,766**
21,040.00 BSF										
DIVISION 23	**HEATING, VENTILATING & AIR-CONDITIONING (HVAC)**									
23 00 00.000.05 Building HVAC Allowance		21,040.00	BSF			1,148,649			54.594/BSF	1,148,649
DIVISION 23 HEATING, VENTILATING & AIR-CONDITIONING (HVAC)						**1,148,649**			**54.594/BSF**	**1,148,649**
21,040.00 BSF										
DIVISION 31	**EARTHWORK**									
31.23.10.P005 Excavation, Backfill, and Haul Off-Site		8,650.00	CY	62,209	22,565		59,694		16.702/CY	144,469
DIVISION 31 EARTHWORK				**62,209**	**22,565**		**59,694**		**16.702/CY**	**144,469**
8,650.00 CY										
500.641 Labor hours										
386.088 Equipment hours										
DIVISION 32	**EXTERIOR IMPROVEMENTS**									
32 15 40.0100.05 Pipe Storage Gravel, 6" Thick x 5,165 SF		573.874	SY	5,266	4,804		5,408		26.97 /SY	15,477
32 31 13.000.05 Chainlink Fence - 6' High x 204 LF		204.00	LF	5,655	7,346		226		64.843/LF	13,228
DIVISION 32 EXTERIOR IMPROVEMENTS				**10,921**	**12,150**		**5,634**		**28,705.43 /LS**	**28,705**
1.00 LS										
87.150 Labor hours										
38.786 Equipment hours										
DIVISION 41	**MATERIAL PROCESSING & HANDLING EQUIPMENT**									
41 22 23.000.05 Monorail, 200 LF		200.00	LF	16,858	22,721				197.892/LF	39,578

AACE Classification Accuracy Range

Upper Range +50% **Lower Range -30%**

Central Kitsap Treatment Plant Solids Handling

Kitsap County

Work Activity Report

Description	Quantity		Labor Amount	Material Amount	Subcontract Amount	Equipment Amount	Other Amount	Total Unit Cost	Total Amount
DIVISION 41 MATERIAL PROCESSING & HANDLING EQUIPMENT			**16,858**	**22,721**				**197.892/LF**	**39,578**
200.00 LF									
114.279 Labor hours									
466 O&M BUILDING			***1,835,012***	***2,584,931***	***2,488,739***	***149,274***	***0***	***335.454/BSF***	***7,057,957***
21,040.00 BSF									
14,194.323 Labor hours									
1,394.493 Equipment hours									

500 CENTRATE STORAGE - EXISTING GRAV THICKENER

Description	Quantity		Labor Amount	Material Amount	Subcontract Amount	Equipment Amount	Other Amount	Total Unit Cost	Total Amount
DIVISION 03	**CONCRETE**								
03 09 00.885.15 Concrete Fill, 10'-10" Deep x 9'-5"Long x 5' Wide	18.892	CY	1,003	2,729		113		203.522/CY	3,845
03 11 13.502.05 Concrete Centre Slab, 8" Thick x 1,510 SF	38.00	CY	16,147	29,055		2,101		1,244.814/CY	47,303
03 11 13.504.50 Concrete Launder Wall, 4' High x 146 LF	22.00	CY	27,950	20,280		321		2,206.836/CY	48,550
03 11 13.505.20 Concrete Slab, 16" Thick x 60 SF	3.00	CY	1,338	2,234		117		1,229.56 /CY	3,689
03 11 13.512.05 Concrete Centre Center Slab, 36" Thick x 62 SF	7.00	CY	2,755	4,963		180		1,128.304/CY	7,898
03 11 13.604.05 Concrete Centre Center Slab, 74" Thick x 17 SF	4.00	CY	1,914	2,891		86		1,222.528/CY	4,890
03 11 13.803.20 Concrete Stariway Tank Wall, 13'-4" High x 18 LF	8.00	CY	10,930	7,114		117		2,270.074/CY	18,161
03 11 13.803.25 Concrete Stairway Vault Wall, 18' High x 28 LF	2.00	CY	2,262	2,100		29		2,195.675/CY	4,391
03 11 13.804.60 Centre BLDG Concrete Interior Wall, 12' High X 144 LF	64.00	CY	80,406	55,486		933		2,137.896/CY	136,825
DIVISION 03 CONCRETE			**144,705**	**126,853**		**3,995**		**1,651.083/CY**	**275,552**
166.892 CY									
1,195.481 Labor hours									
68.589 Equipment hours									
DIVISION 05	**METALS**								
05 50 00.450.05 Centrate Building - Ladder x 17 LF	17.00	LF	1,668	4,085		97		344.144/LF	5,850
DIVISION 05 METALS			**1,668**	**4,085**		**97**		**5,850.45 /LS**	**5,850**
1.00 LS									
10.88 Labor hours									
2.72 Equipment hours									
DIVISION 07	**THERMAL, MOISTURE PROTECTION**								
07 61 13.000.05 Steel Roof Cover - Centre Tank x 2,219 SF	2,219.00	SF	26,149	55,094		1,634		37.349/SF	82,877
07 72 33.000.15 Roof Hatch, 4' x 4'	1.00	EA	553	3,546				4,098.82 /EA	4,099
DIVISION 07 THERMAL, MOISTURE PROTECTION			**26,702**	**58,639**		**1,634**		**39.196/SF**	**86,976**
2,219.00 SF									
205.441 Labor hours									
18.557 Equipment hours									
DIVISION 31	**EARTHWORK**								
31.23.10.P005 Excavation, Backfill, and Haul Off-Site	4,530.00	CY	61,973	4,877		61,081		28.241/CY	127,931
31.23.19.P030 Well Point Detwatering - 8 Months	8.00	MO	902,737	294,350				149,635.899/MO	1,197,087

Central Kitsap Treatment Plant Solids Handling

Kitsap County

Work Activity Report

Description	Quantity	Labor Amount	Material Amount	Subcontract Amount	Equipment Amount	Other Amount	Total Unit Cost	Total Amount
DIVISION 31 EARTHWORK		**964,710**	**299,227**		**61,081**		**292.499/CY**	**1,325,018**
4,530.00 CY								
7,363.018 Labor hours								
433.730 Equipment hours								
DIVISION 46	**WATER AND WASTEWATER EQUIPMENT**							
46 13 01.005.05 Fabricated Aluminum Tank Covers, 2,219 SF	2,219.00 SF			522,503			235.468/SF	522,503
DIVISION 46 WATER AND WASTEWATER EQUIPMENT				**522,503**			**522,503.31 /EA**	**522,503**
1.00 EA								
500 CENTRATE STORAGE - EXISTING GRAV THICKENER		***1,137,785***	***488,805***	***522,503***	***66,807***	***0***	***2,215,900.27 /LS***	***2,215,900***
1.00 LS								
8,774.821 Labor hours								
523.596 Equipment hours								
546 EXISTING SOLIDS PROCESSING BUILDING								
DIVISION 46	**WATER AND WASTEWATER EQUIPMENT**							
43.23.50.010 Centrate pumps 1, 2	2.00 EA	5,715	75,671		2,727		42,056.24 /EA	84,112
43.23.50.012 Centrate overflow pumps 1, 2	2.00 EA	5,715	51,594		2,727		30,017.715/EA	60,035
DIVISION 46 WATER AND WASTEWATER EQUIPMENT		**11,429**	**127,264**		**5,454**		**36,036.978/EA**	**144,148**
4.00 EA								
96.00 Labor hours								
32.00 Equipment hours								
546 EXISTING SOLIDS PROCESSING BUILDING		***11,429***	***127,264***	***0***	***5,454***	***0***	***144,147.91 /LS***	***144,148***
1.00 LS								
96.00 Labor hours								
32.00 Equipment hours								
547 PRIMARY SLUDGE & SEPTAGE BUILDING								
DIVISION 03	**CONCRETE**							
03 11 13.303.15 Elevated Roof Slab, 12" Thick x 5,258 SF	195.00 CY	70,589	142,104		8,322		1,133.411/CY	221,015
03 11 13.504.05 1st Floor Slab, 12" Thick x 5,258 SF	195.00 CY	70,589	142,104		8,322		1,133.411/CY	221,015
03 11 13.504.10 Buried Slab, 12" Thick x 1,589 SF	58.00 CY	21,548	42,376		2,460		1,144.563/CY	66,385
03 11 13.804.20 Concrete Wall, 16' High x 12" Thick x 397 LF	236.00 CY	294,791	202,743		3,442		2,122.782/CY	500,977
03 11 13.804.25 Grade Wall, 1' High x 12" Thick x 397 LF	15.00 CY	21,026	17,687		219		2,595.401/CY	38,931
03 41 33.000.25 Double Tee Roof x 5,258 SF	5,257.99 SF	10,613	128,857		4,151		27.315/SF	143,621
DIVISION 03 CONCRETE		**489,156**	**675,871**		**26,916**		**1,705.212/CY**	**1,191,943**
699.00 CY								
4,013.856 Labor hours								
378.845 Equipment hours								
DIVISION 07	**THERMAL, MOISTURE PROTECTION**							

Central Kitsap Treatment Plant Solids Handling

Kitsap County

Work Activity Report

Description		Quantity		Labor Amount	Material Amount	Subcontract Amount	Equipment Amount	Other Amount	Total Unit Cost	Total Amount
07 51 00.000.25 Built Up Roofing System PVC x 5,258 SF		5,258.00	SF	64,712	43,902				20.657/SF	108,614
DIVISION 07 THERMAL, MOISTURE PROTECTION				**64,712**	**43,902**				**20.657/SF**	**108,614**
5,258.00 SF										
515.203 Labor hours										
DIVISION 08	**OPENINGS**									
08 11 00.030.20 (PRIMARY SEP) - Exterior Door, 3' x 7'		2.00	EA	3,014	7,029				5,021.62 /EA	10,043
08 11 00.060.20 (PRIMARY SEP) - Exterior Door, 6' x 7'		2.00	EA	4,392	13,073				8,732.57 /EA	17,465
08 36 13.000.20 Overhead Door, 14' x 14'		2.00	EA	7,020	24,455				15,737.495/EA	31,475
DIVISION 08 OPENINGS				**14,426**	**44,557**				**9,830.562/EA**	**58,983**
6.00 EA										
97.690 Labor hours										
DIVISION 31	**EARTHWORK**									
31.23.10.P005 Excavation, Backfill, and Haul Off-Site		3,850.00	CY	35,919	8,225		34,990		20.554/CY	79,135
DIVISION 31 EARTHWORK				**35,919**	**8,225**		**34,990**		**20.554/CY**	**79,135**
3,850.00 CY										
289.908 Labor hours										
238.106 Equipment hours										
DIVISION 46	**WATER AND WASTEWATER EQUIPMENT**									
43.23.57.015 Thickened Stream Pumps and Diversion Header		5.00	EA	66,400	447,144		17,958		106,300.454/EA	531,502
43.23.57.023 Solids stream				24,145	120,385		6,530			151,061
43.25.53.005 Polymer Activation System				29,780	370,055		118	1,554		401,507
43.41.43.005 Tote mixer		2.00	EA	2,430	17,198			251	9,939.665/EA	19,879
46.24.23.005 Inline Sludge Grinder		1.00	EA	3,398	23,217		361		26,976.04 /EA	26,976
46.41.00.010 Flocculation Tank Mixer		3.00	EA	29,163	196,056			1,691	75,636.570/EA	226,910
46.71.33.005 Rotary Drum Thickener		3.00	EA	68,266	1,160,856		25,431	2,821	419,124.197/EA	1,257,373
DIVISION 46 WATER AND WASTEWATER EQUIPMENT				**223,582**	**2,334,911**		**50,399**	**6,317**	**124,533.703/EA**	**2,615,208**
21.00 EA										
1,546.50 Labor hours										
661.50 Equipment hours										
547 PRIMARY SLUDGE & SEPTAGE BUILDING				***827,795***	***3,107,467***	***0***	***112,304***	***6,317***	***770.993/BSF***	***4,053,883***
5,258.00 BSF										
6,463.158 Labor hours										
1,278.451 Equipment hours										

599 DIGESTERS 1&2 - EXISTING

DIVISION 03	**CONCRETE**									
03 11 13.803.10 Concrete Tank Wall, Add Tanks Wall Height - Allowance		778.00	CY	659,369	616,917		11,346		1,655.054/CY	1,287,632
DIVISION 03 CONCRETE				**659,369**	**616,917**		**11,346**		**1,655.054/CY**	**1,287,632**
778.00 CY										
5,433.205 Labor hours										
199.709 Equipment hours										

AACE Classification Accuracy Range

Upper Range +50% **Lower Range -30%**

Central Kitsap Treatment Plant Solids Handling

Kitsap County

Work Activity Report

Description	Quantity		Labor Amount	Material Amount	Subcontract Amount	Equipment Amount	Other Amount	Total Unit Cost	Total Amount
DIVISION 13	**SPECIAL CONSTRUCTION**								
13.61.02.010 Fixed Steel Cover			175,760		2,092,754	83,710			2,352,224
DIVISION 13 SPECIAL CONSTRUCTION			**175,760**		**2,092,754**	**83,710**			**2,352,224**
1,320.00 Labor hours									
240.00 Equipment hours									
DIVISION 46	**WATER AND WASTEWATER EQUIPMENT**								
43.23.57.010 Septage Equalization Pumps	2.00	EA	31,389	257,968		7,912		148,634.245/EA	297,268
43.23.57.037 Centrifuge feed and transfer pumps	4.00	EA	48,291	343,957		13,061		101,327.098/EA	405,308
43.23.58.010 Sludge Recirc Pumps			7,460	87,203		1,263			95,926
46.73.33.010 Rotamix Mix System			57,147	565,810		23,973			646,930
46.73.41.010 Heat Exchanger - Recirc Digested Sludge	2.00	EA	19,589	120,385		9,042		74,508.095/EA	149,016
DIVISION 46 WATER AND WASTEWATER EQUIPMENT			**163,876**	**1,375,323**		**55,251**		**199,306.198/EA**	**1,594,450**
8.00 EA									
1,216.00 Labor hours									
452.00 Equipment hours									
599 DIGESTERS 1&2 - EXISTING			***999,005***	***1,992,241***	***2,092,754***	***150,307***	***0***	***4,026,389.37 /MG***	***5,234,306***
1.30 MG									
7,969.205 Labor hours									
891.709 Equipment hours									
600 DIGESTERS 3&4 - NEW W/ CONTROL BUILDING									
DIVISION 03	**CONCRETE**								
03 11 13.154.25 Concrete Tank Footing, 30" High x 67" Thick x 422 LF	219.00	CY	80,338	153,995		5,782		1,096.415/CY	240,115
03 11 13.154.30 Concrete Stairway Footing, 36" High x 10" Wide x 54 LF	5.00	CY	4,232	4,087		125		1,688.738/CY	8,444
03 11 13.154.35 Concrete Footing, 36" High x 24' Wide x 144 LF	32.00	CY	16,385	23,523		784		1,271.629/CY	40,692
03 11 13.300.10 Concrete Stairway Elevated Slab, 12" Thick x 2,341 SF	87.00	CY	32,040	63,537		3,714		1,141.272/CY	99,291
03 11 13.504.20 Stairway Concrete Slab, 24" Thick x 1,326 SF	99.00	CY	31,525	68,870		2,868		1,043.061/CY	103,263
03 11 13.505.10 Tank Concrete Slab, 30" Thick x 6,658 SF	617.00	CY	181,351	423,062		16,341		1,006.084/CY	620,754
03 11 13.800.10 Exterior Concrete Stair Wall, 29' High x 156 LF	168.00	CY	209,088	142,732		2,450		2,108.750/CY	354,270
03 11 13.803.10 Concrete Tank Wall, Add Tanks Wall Height - Allowance	778.00	CY	659,369	616,917		11,346		1,655.055/CY	1,287,632
03 41 33.000.10 Double Tee Roof, 243 SF	243.00	SF	490	5,955		192		27.315/SF	6,638
DIVISION 03 CONCRETE			**1,214,818**	**1,502,678**		**43,602**		**1,377.106/CY**	**2,761,098**
2,005.00 CY									
9,940.695 Labor hours									
670.497 Equipment hours									
DIVISION 04	**MASONRY**								
04 22 00.212.10 CMU Block Split-Face, 12" Thick x 10' High x 65 LF	650.00	SF	25,308	17,071		393		65.803/SF	42,772
DIVISION 04 MASONRY			**25,308**	**17,071**		**393**			**42,772**
200.790 Labor hours									
8.625 Equipment hours									
DIVISION 05	**METALS**								
05 50 00.315.05 Stairs	84.00	RISR	14,917	100,435		865		1,383.543/RISR	116,218
05 52 02.002.05 Hand Railing, 241 LF	241.00	LF	8,632	44,149		501		221.084/LF	53,281

AACE Classification Accuracy Range

Upper Range +50% **Lower Range -30%**

Central Kitsap Treatment Plant Solids Handling

Kitsap County

Work Activity Report

Description	Quantity		Labor Amount	Material Amount	Subcontract Amount	Equipment Amount	Other Amount	Total Unit Cost	Total Amount
DIVISION 05 METALS			**23,549**	**144,584**		**1,366**			**169,499**
153.572 Labor hours									
38.393 Equipment hours									
DIVISION 07	**THERMAL, MOISTURE PROTECTION**								
07 51 00.000.10 Built Up Roofing System PVC, 243 SF	243.00	SF	7,769	4,279				49.580/SF	12,048
DIVISION 07 THERMAL, MOISTURE PROTECTION			**7,769**	**4,279**				**49.580/SF**	**12,048**
243.00 SF									
60.808 Labor hours									
DIVISION 08	**OPENINGS**								
08 11 00.060.35 Exterior Door, 6' x 7'	3.00	EA	6,588	19,609				8,732.557/EA	26,198
DIVISION 08 OPENINGS			**6,588**	**19,609**				**8,732.557/EA**	**26,198**
3.00 EA									
45.824 Labor hours									
DIVISION 13	**SPECIAL CONSTRUCTION**								
13.61.04.010 Gas holding membrane cover			106,521	2,379,502	54,594	63,693			2,604,309
13.61.04.015 Cover Blowers	2.00	EA	6,990	29,547		2,802		19,669.815/EA	39,340
DIVISION 13 SPECIAL CONSTRUCTION			**113,512**	**2,409,048**	**54,594**	**66,495**			**2,643,649**
844.00 Labor hours									
244.00 Equipment hours									
DIVISION 31	**EARTHWORK**								
31.23.10.P005 Excavation, Backfill, and Haul Off-Site	27,305.00	CY	248,210	59,835		241,503		20.126/CY	549,547
31.23.19.P025 Well Point Detwatering - 12 Months	12.00	MO	1,566,512	521,369				173,990.027/MO	2,087,880
DIVISION 31 EARTHWORK			**1,814,721**	**581,203**		**241,503**		**96.591/CY**	**2,637,427**
27,305.00 CY									
13,909.490 Labor hours									
1,636.709 Equipment hours									
DIVISION 46	**WATER AND WASTEWATER EQUIPMENT**								
43.23.57.010 Septage Equalization Pumps	2.00	EA	31,389	257,968		7,912		148,634.25 /EA	297,269
43.23.57.037 Centrifuge feed and transfer pumps	4.00	EA	48,291	343,957		13,061		101,327.098/EA	405,308
43.23.58.010 Sludge Recirc Pumps			7,460	87,203		1,263			95,926
46.73.33.010 Rotamix Mix System			57,147	565,810		23,973			646,930
46.73.41.010 Heat Exchanger - Recirc Digested Sludge	2.00	EA	19,589	120,385		9,042		74,508.095/EA	149,016
DIVISION 46 WATER AND WASTEWATER EQUIPMENT			**163,876**	**1,375,323**		**55,251**		**199,306.199/EA**	**1,594,450**
8.00 EA									
1,216.00 Labor hours									
452.00 Equipment hours									
600 DIGESTERS 3&4 - NEW W/ CONTROL BUILDING			***3,370,141***	***6,053,796***	***54,594***	***408,610***	***0***	***7,062,243.164/MGD***	***9,887,140***
1.40 MGD									
26,371.179 Labor hours									
3,050.224 Equipment hours									

AACE Classification Accuracy Range

Upper Range +50% **Lower Range -30%**

Central Kitsap Treatment Plant Solids Handling

Kitsap County

Work Activity Report

Description	Quantity		Labor Amount	Material Amount	Subcontract Amount	Equipment Amount	Other Amount	Total Unit Cost	Total Amount
630 DIGESTER CONTROL BUILDING									
DIVISION 03	**CONCRETE**								
03 11 13.155.05 Concrete Footing, 12" High x 2' Wide x 226 LF	17.00	CY	5,274	7,968		52		782.059/CY	13,295
03 11 13.303.20 Roof Slab, 12" Thick x 3,190 SF	119.00	CY	43,424	86,778		5,062		1,136.674/CY	135,264
03 11 13.504.25 Concrete Slab, 12" Thick x 3,190 SF	119.00	CY	43,424	86,778		5,062		1,136.674/CY	135,264
03 11 13.804.40 Concrete Wall, 16' High x 267 LF	159.00	CY	198,335	136,622		2,319		2,121.228/CY	337,275
03 11 13.804.45 Grade Wall, 12" High x 12" Wide x 534 LF	20.00	CY	28,241	23,629		292		2,608.059/CY	52,161
03 41 33.000.15 Double Tee Roof x 3,190 SF	3,189.99	SF	6,439	78,177		2,518		27.315/SF	87,134
DIVISION 03 CONCRETE			**325,137**	**419,952**		**15,305**		**1,752.059/CY**	**760,394**
434.00 CY									
2,673.088 Labor hours									
216.817 Equipment hours									
DIVISION 07	**THERMAL, MOISTURE PROTECTION**								
07 51 00.000.15 Built Up Roofing System PVC x 3,190 SF	3,190.00	SF	44,127	28,933				22.903/SF	73,060
DIVISION 07 THERMAL, MOISTURE PROTECTION			**44,127**	**28,933**				**22.903/SF**	**73,060**
3,190.00 SF									
350.248 Labor hours									
DIVISION 08	**OPENINGS**								
08 11 00.030.25 Exterior Door, 3' x 7'	1.00	EA	1,507	3,514				5,021.610/EA	5,022
08 11 00.060.30 Exterior Door, 6' x 7'	3.00	EA	6,588	19,610				8,732.567/EA	26,198
08 36 15.000.10 Overhead Door, 14' x 14'	1.00	EA	3,510	12,167				15,676.44 /EA	15,676
DIVISION 08 OPENINGS			**11,605**	**35,291**				**9,379.15 /EA**	**46,896**
5.00 EA									
79.394 Labor hours									
DIVISION 31	**EARTHWORK**								
31.23.10.P005 Excavation, Backfill, and Haul Off-Site	2,735.00	CY	22,026	6,697		21,333		18.302/CY	50,055
DIVISION 31 EARTHWORK			**22,026**	**6,697**		**21,333**		**18.302/CY**	**50,055**
2,735.00 CY									
177.536 Labor hours									
141.990 Equipment hours									
DIVISION 46	**WATER AND WASTEWATER EQUIPMENT**								
46.73.41.000 Hot Water Boiler	2.00	EA	56,591	963,080		19,591		519,631.075/EA	1,039,262
DIVISION 46 WATER AND WASTEWATER EQUIPMENT			**56,591**	**963,080**		**19,591**		**519,631.075/EA**	**1,039,262**
2.00 EA									
416.00 Labor hours									
416.00 Equipment hours									
630 DIGESTER CONTROL BUILDING			***459,485***	***1,453,953***	***0***	***56,229***	***0***	***617.450/BSF***	***1,969,667***
3,190.00 BSF									
3,696.267 Labor hours									

AACE Classification Accuracy Range

Upper Range +50% **Lower Range -30%**

Central Kitsap Treatment Plant Solids Handling

Kitsap County

Work Activity Report

Description	Quantity		Labor Amount	Material Amount	Subcontract Amount	Equipment Amount	Other Amount	Total Unit Cost	Total Amount
630 DIGESTER CONTROL BUILDING			***459,485***	***1,453,953***	***0***	***56,229***	***0***	***617.450/BSF***	***1,969,667***
3,190.00 BSF									
3,696.267 Labor hours									
774.807 Equipment hours									
819 FOG RECEIVING BUILDING									
DIVISION 03	**CONCRETE**								
03 11 13.154.05 Concrete Footing, 12" High x 2' Wide x 91 LF	7.00	CY	4,038	5,466		297		1,400.166/CY	9,801
03 11 13.303.05 Lower Level Concrete Slab, 12" Thick x 276 SF	11.00	CY	4,337	8,080		454		1,170.111/CY	12,871
03 11 13.303.10 Elevated Roof Slab, 12" Thick x 1,258 SF	47.00	CY	17,614	34,400		2,005		1,149.350/CY	54,019
03 11 13.306.05 Lower Level Concrete Slab, 18" Thick x 131 SF	8.00	CY	3,051	5,747		266		1,133.055/CY	9,064
03 11 13.504.60 1st Level Concrete Slab, 12" Thick x 1,258 SF	47.00	CY	17,614	28,367		2,005		1,020.993/CY	47,987
03 11 13.804.05 Concrete Wall, 20' High x 150 LF	112.00	CY	139,100	95,627		1,633		2,110.358/CY	236,360
03 11 13.804.10 Concrete Wall, 8' High x 56 LF	17.00	CY	21,089	14,948		248		2,134.423/CY	36,285
03 11 13.804.15 Concrete Wall, 25' High x 34 LF	32.00	CY	39,436	27,248		467		2,098.478/CY	67,151
03 11 13.815.05 Grade Wall, 2' High x 92 LF	7.00	CY	9,155	7,119		102		2,339.35 /CY	16,375
03 41 33.000.20 Double Tee Roof x 1,258 SF	1,257.979	SF	2,539	30,829		993		27.315/SF	34,361
DIVISION 03 CONCRETE			**257,973**	**257,833**		**8,470**		**1,820.404/CY**	**524,276**
288.00 CY									
2,124.713 Labor hours									
125.254 Equipment hours									
DIVISION 05	**METALS**								
05 50 00.315.10 Stairs	3.00	RISR	659	5,218		38		1,971.713/RISR	5,915
05 52 02.002.10 Hand Railing, 40 LF	40.00	LF	1,433	7,328		83		221.084/LF	8,843
DIVISION 05 METALS			**2,092**	**12,546**		**121**		**14,758.50 /LS**	**14,759**
1.00 LS									
13.640 Labor hours									
3.410 Equipment hours									
DIVISION 07	**THERMAL, MOISTURE PROTECTION**								
07 51 00.000.20 Built Up Roofing System PVC x 1,258 SF	1,258.00	SF	22,554	13,851				28.938/SF	36,404
07 72 33.000.05 Roof Hatch, 4' x 4'	2.00	EA	1,106	7,091				4,098.82 /EA	8,198
DIVISION 07 THERMAL, MOISTURE PROTECTION			**23,660**	**20,942**				**35.455/SF**	**44,602**
1,258.00 SF									
186.016 Labor hours									
DIVISION 08	**OPENINGS**								
08 11 00.030.15 (FOG BLDG) - Exterior Door, 3' x 7'	2.00	EA	3,014	7,029				5,021.62 /EA	10,043
08 11 00.060.15 (FOG BLDG) - Interior Door, 6' x 7'	3.00	EA	6,588	19,610				8,732.563/EA	26,198
08 36 13.000.05 (FOG BLDG) - Overhead Rollup Door, 8' x 8'	1.00	EA	1,997	6,505				8,502.40 /EA	8,502
08 36 13.000.10 Overhead Door, 10' x 10'	1.00	EA	2,213	8,612				10,825.00 /EA	10,825
DIVISION 08 OPENINGS			**13,813**	**41,756**				**7,938.333/EA**	**55,568**
7.00 EA									
94.393 Labor hours									

Central Kitsap Treatment Plant Solids Handling

Kitsap County

Work Activity Report

Description		Quantity		Labor Amount	Material Amount	Subcontract Amount	Equipment Amount	Other Amount	Total Unit Cost	Total Amount
DIVISION 31	**EARTHWORK**									
31.23.10.P005 Excavation, Backfill, and Haul Off-Site		2,360.00	CY	14,842	6,770		14,188		15.169/CY	35,799
31.23.19.P020 Well Point Detwatering - 4 Months		4.00	MO	240,023	74,029				78,512.893/MO	314,052
DIVISION 31 EARTHWORK				**254,864**	**80,799**		**14,188**		**148.242/CY**	**349,850**
2,360.00	**CY**									
1,943.635	Labor hours									
89.809	Equipment hours									
DIVISION 46	**WATER AND WASTEWATER EQUIPMENT**									
43.23.57.050 FOG Feed Pumps		4.00	EA	48,291	171,979		13,061		58,332.445/EA	233,330
43.23.58.015 Fog Transfer pumps		2.00	EA	11,190	85,989		1,263		49,221.10 /EA	98,442
44.51.00.004 Truck Connection and Control		2.00	EA	9,423	85,989		2,527		48,969.755/EA	97,940
44.51.00.008 Screening Bin		1.00	EA	538	10,319		144		11,001.59 /EA	11,002
44.51.04.005 Fog Screening System		1.00	EA	14,920	644,920		6,430	5,494	671,763.90 /EA	671,764
DIVISION 46 WATER AND WASTEWATER EQUIPMENT				**84,362**	**999,196**		**23,425**	**5,494**	**111,247.698/EA**	**1,112,477**
10.00	**EA**									
618.00	Labor hours									
282.00	Equipment hours									
819 FOG RECEIVING BUILDING				***636,764***	***1,413,070***	***0***	***46,204***	***5,494***	***2,101,532.44 /LS***	***2,101,532***
1.00	***LS***									
4,980.397	Labor hours									
500.473	Equipment hours									

821 SEPTAGE HANDLING FACILITY

DIVISION 03	**CONCRETE**									
03 11 13.504.30 Foundation Slab, 12" Thick x 120 SF		5.00	CY	2,057	3,675		196		1,185.682/CY	5,928
03 11 13.801.10 Concrete Wall, 8' High x 8" Thick x 10 LF		2.00	CY	3,504	2,025		29		2,779.395/CY	5,559
03 11 13.804.50 Concrete Wall, 8' High x 12" Thick x 44 LF		14.00	CY	16,729	12,223		204		2,082.604/CY	29,156
03 11 13.804.55 Concrete Wall, 15' High x 12" Thick x 205 LF		114.00	CY	142,736	98,214		1,663		2,128.184/CY	242,613
03 41 33.000.30 Double Tee Roof x 1,515 SF		5,257.99	SF	10,613	128,857		4,151		27.315/SF	143,621
03.11.20.005 Retaining wall - Btwn infl box & Septage Screen		46.40	CY	29,227	33,309		2,448		1,400.501/CY	64,983
DIVISION 03 CONCRETE				**204,866**	**278,304**		**8,691**		**2,711.471/CY**	**491,861**
181.40	**CY**									
1,684.269	Labor hours									
69.147	Equipment hours									
DIVISION 07	**THERMAL, MOISTURE PROTECTION**									
07 51 00.000.30 SEPTAGE EQU - Built Up Roofing System PVC x 1,515 SF		1,515.00	SF	25,662	15,958				27.472/SF	41,620
07 72 33.000.10 Roof Hatch, 4' x 4'		6.00	EA	3,319	21,274				4,098.82 /EA	24,593
DIVISION 07 THERMAL, MOISTURE PROTECTION				**28,981**	**37,232**				**43.705/SF**	**66,213**
1,515.00	**SF**									
226.772	Labor hours									
DIVISION 08	**OPENINGS**									

AACE Classification Accuracy Range

Upper Range +50% **Lower Range -30%**

Central Kitsap Treatment Plant Solids Handling

Kitsap County

Work Activity Report

Description	Quantity		Labor Amount	Material Amount	Subcontract Amount	Equipment Amount	Other Amount	Total Unit Cost	Total Amount
08.31.00.P005 Septage Handling Facility - Access Doors - 3' x 3'	6.00	EA	2,641	16,546				3,197.808/EA	19,187
DIVISION 08 OPENINGS			**2,641**	**16,546**				**3,197.808/EA**	**19,187**
6.00 EA									
17.455 Labor hours									
DIVISION 31 EARTHWORK									
31.23.10.P005 Excavation, Backfill, and Haul Off-Site	8,465.00	CY	60,489	22,565		58,246		16.692/CY	141,301
31.23.19.P015 Well Point Detwatering - 4 Months	4.00	MO	300,028	92,536				98,141.11 /MO	392,564
DIVISION 31 EARTHWORK			**360,518**	**115,101**		**58,246**		**63.067/CY**	**533,866**
8,465.00 CY									
2,767.373 Labor hours									
379.236 Equipment hours									
DIVISION 33 UTILITIES (BURIED PIPE AND VALVES)									
33.05.15.005 Equalization Valve Vault	1.00	EA	3,229	8,189		1,742		13,159.54 /EA	13,160
DIVISION 33 UTILITIES (BURIED PIPE AND VALVES)			**3,229**	**8,189**		**1,742**			**13,160**
28.00 Labor hours									
4.00 Equipment hours									
DIVISION 40 PROCESS INTEGRATION (EXPOSED PIPE, VALVES AND GATES)									
40.05.58.005 EQ Tank Effluent Gate	2.00	EA	7,719	33,811		2,866		22,197.745/EA	44,395
DIVISION 40 PROCESS INTEGRATION (EXPOSED PIPE, VALVES AND GATES)			**7,719**	**33,811**		**2,866**			**44,395**
56.00 Labor hours									
12.00 Equipment hours									
DIVISION 46 WATER AND WASTEWATER EQUIPMENT									
43.23.57.010 Septage Equalization Pumps	2.00	EA	24,145	120,385		6,530		75,530.31 /EA	151,061
44.51.00.002 Septic Influent box w/ barscreen	3.00	EA	26,220	382,308		13,928		140,818.730/EA	422,456
44.51.00.004 Truck Connection and Control	2.00	EA	12,923	120,385		3,466		68,386.935/EA	136,774
44.51.00.008 Screening Bin	1.00	EA	1,615	30,956		433		33,004.770/EA	33,005
44.51.05.005 Septage Screen & Degrit System	2.00	EA	29,840	1,905,523		12,860		974,111.365/EA	1,948,223
46.41.00.005 EQ Tank Mixers	2.00	EA	19,442	130,704			1,127	75,636.570/EA	151,273
DIVISION 46 WATER AND WASTEWATER EQUIPMENT			**114,186**	**2,690,261**		**37,217**	**1,127**	**236,899.277/EA**	**2,842,791**
12.00 EA									
850.00 Labor hours									
573.429 Equipment hours									
821 SEPTAGE HANDLING FACILITY			***722,139***	***3,179,445***	***0***	***108,762***	***1,127***	***4,011,473.07 /LS***	***4,011,473***
1.00 LS									
5,629.868 Labor hours									
1,037.811 Equipment hours									

823 SEPTAGE INFLUENT BOX

DIVISION 03 CONCRETE									
03 09 00.885.05 Concrete Fill Transverse Section, 5'-5" Thick x 33 SF	79.457	CY	4,219	11,479		474		203.522/CY	16,171

Central Kitsap Treatment Plant Solids Handling

Kitsap County

Work Activity Report

11/17/2023 4:04 PM

Design Stage: Basis of Design Report (15%) - Class 4

Estimate Version: Rev01 / 17-Nov-2023

Description	Quantity		Labor Amount	Material Amount	Subcontract Amount	Equipment Amount	Other Amount	Total Unit Cost	Total Amount
03 09 00.885.10 Concrete Fill, 2' Thick x 34 SF	30.223	CY	1,605	4,366		180		203.522/CY	6,151
03 11 13.504.35 (Septage EQU) Lower Level Slab, 12" Thick x 314 SF	12.00	CY	4,746	8,810		494		1,170.867/CY	14,050
03 11 13.504.40 (Septage EQU) Foundation Slab, 12" Thick x 1,515 SF	57.00	CY	21,172	41,654		2,420		1,144.669/CY	65,246
03 11 13.504.45 (Septage EQU) Elevated Slab, 12" Thick x 1,515 SF	57.00	CY	21,172	41,654		2,420		1,144.669/CY	65,246
DIVISION 03 CONCRETE			**52,914**	**107,962**		**5,989**		**708.015/CY**	**166,865**
235.68 CY									
438.111 Labor hours									
105.454 Equipment hours									
DIVISION 05 METALS									
05 50 00.305.05 SEPTAGE INFLUENT BOX - Metal Grating x 37 SF	37.00	SF	182	3,061		11		87.923/SF	3,253
DIVISION 05 METALS			**182**	**3,061**		**11**			**3,253**
1.184 Labor hours									
0.296 Equipment hours									
DIVISION 31 EARTHWORK									
31.23.10.P005 Excavation, Backfill, and Haul Off-Site	665.00	CY	2,598	2,257		2,377		10.874/CY	7,231
31.23.19.P010 Well Point Detwatering - 2 Months	2.00	MO	120,349	39,307				79,828.12 /MO	159,656
DIVISION 31 EARTHWORK			**122,947**	**41,564**		**2,377**		**250.959/CY**	**166,887**
665.00 CY									
935.442 Labor hours									
12.543 Equipment hours									
823 SEPTAGE INFLUENT BOX			***176,042***	***152,587***	***0***	***8,376***	***0***	***337,005.53 /LS***	***337,006***
1.00 LS									
1,374.737 Labor hours									
118.293 Equipment hours									

AACE Classification Accuracy Range

Upper Range +50% **Lower Range -30%**

Central Kitsap Treatment Plant Solids Handling

Kitsap County

Work Activity Report

Estimate Totals

Description	Amount	Totals	Rate
Labor	13,410,841		
Material	25,848,348		
Equipment	2,055,573		
Subcontract	7,264,244		
Other	13,563		
Subtotal Field Const Costs	**48,592,569**	**48,592,569**	
Sales Tax Estimate (Mat & Eq)	1,455,560		9.200 %
Subtotal Field Const Costs	**1,455,560**	**50,048,129**	
Design Contingency	14,484,110		30.000 %
Subtotal Field Const Costs	**14,484,110**	**64,532,239**	
Escalation Project (Year)	7,945,983		12.660 %
Construction Subtotal	**7,945,983**	**72,478,222**	
Market Volatility Adjustment Factor	1,449,564		2.000 %
Construction Total	**1,449,564**	**73,927,786**	
Special Coatings	947,792		1.000 %
Exposed Pipe	6,634,545		7.000 %
Electrical	9,477,921		10.000 %
Controls	3,791,169		4.000 %
Factored Costs	**20,851,427**	**94,779,213**	

AACE Classification Accuracy Range

Upper Range +50% **Lower Range -30%**

Central Kitsap Treatment Plant Solids Handling

Kitsap County

Detail Report with Contractor Markups

11/17/2023 4:04 PM

Design Stage: Basis of Design Report (15%) - Class 4

Estimate Version: Rev01 / 17-Nov-2023

Project name	**Kitsap Solids Handling 30_KAJ-01**
Estimator	KAJ, PB, KMJ
Labor rate table	HDR_2023_Union
Equipment rate table	HDR_EQ_2023
Project	Solids Digestion
Report format	Sorted by 'WBS_MAIN/MF04_DIV/Work Activity/HDR04SPEC' 'Detail' summary Allocate addons

AACE Classification Accuracy Range

Upper Range +50% **Lower Range -30%**

Central Kitsap Treatment Plant Solids Handling

Kitsap County

Detail Report with Contractor Markups

11/17/2023 4:04 PM

Design Stage: Basis of Design Report (15%) - Class 4

Estimate Version: Rev01 / 17-Nov-2023

Item		Description	Takeoff Qty		Labor Amount	Material Amount	Subcontract Amount	Name	Equipment Amount	Other Amount	Total Unit Cost	Total Amount
		006 SITEWORK										
DIVISION 32		**EXTERIOR IMPROVEMENTS**										
32.12.16.005		*Access Road Around New Maintenance Building*										
32 12 16.000		*Asphalt Vehicular Paving*										
	0100	Aggregate for earthwork, bank run gravel, spread with 200 H.P. dozer, includes load at pit and haul, 2 miles round trip, excludes compaction	719.00	lcy	4,189	35,982	-		5,641	-	63.715 /lcy	45,811
	0012	Fine grading, finish grading, small area, to be paved with grader	2,155.556	sy	10,532	-	-		10,166	-	9.602 /sy	20,698
	5020	Compaction, riding, vibrating roller, 3 passes, 6" lifts	719.00	ecy	479	-	-		321	-	1.113 /ecy	800
	0160	Plant-mix asphalt paving, for highways and large paved areas, binder course, 3" thick, no hauling included	2,155.556	SY	4,466	43,541	-		2,107	-	23.249 /SY	50,114
	0460	Plant-mix asphalt paving, for highways and large paved areas, wearing course, 3" thick, no hauling included	2,155.556	sy	4,957	47,856	-		2,295	-	25.566 /sy	55,108
	0710	Painted pavement markings, thermoplastic, white or yellow, 4" wide, less than 6000 LF	1,000.00	lf	293	1,674	-		205	-	2.172 /lf	2,172
n	0560	Hauling, asphalt material,loose cubic yards,20 mile round trip,0.4 load/hr,base wide rate,12 cy truck,highway haulers,excludes loading	413.00	lcy	10,401	-	-		10,777	-	51.279 /lcy	21,178
		32 12 16.000 Asphalt Vehicular Paving			*35,316*	*129,054*			*31,513*		*90.873/SY*	*195,883*
		2,155.556 SY										
		291.816 Labor hours										
		186.382 Equipment hours										
		32.12.16.005 Access Road Around New Maintenance Building			*35,316*	*129,054*	*0*		*31,513*	*0*	*90.873/SY*	*195,883*
		2,155.556 SY										
		291.816 Labor hours										
		186.382 Equipment hours										
32.13.13.005		*Concrete Paving - Process Area Allowance*										
32 13 13.000		*Concrete Paving*										
n	1420	Struct PAVING concrete,ready mix,normal wt,4000 psi,includes local aggregate,sand,portland cement and water,delivered, includes all additives	180.00	CY	-	70,426	-		-	-	391.254 /CY	70,426
	0540	Concrete paving surface treatment, reinforcing steel for rigid paving, 18 lbs/SY	800.00	SY	4,082	20,018	-		-	-	30.125 /SY	24,100
	0644	Concrete paving surface treatment, 4500 psi, slip form, unreinforced, 24' pass, 8" thick, includes joints, finishing, and curing	800.00	sy	778	49,498	-		489	-	63.457 /sy	50,766

AACE Classification Accuracy Range

Upper Range +50% **Lower Range -30%**

Central Kitsap Treatment Plant Solids Handling

Kitsap County

Detail Report with Contractor Markups

Item		Description	Takeoff Qty		Labor Amount	Material Amount	Subcontract Amount	Subcontract Name	Equipment Amount	Other Amount	Total Unit Cost	Total Amount
		32 13 13.000 Concrete Paving			*4,861*	*139,942*			*489*		*181.614/SY*	*145,291*
		800.00 SY										
		35.470 Labor hours										
		1.811 Equipment hours										
		32.13.13.005 Concrete Paving - Process Area Allowance			*4,861*	*139,942*	*0*		*489*	*0*	*181.614/SY*	*145,291*
		800.00 SY										
		35.470 Labor hours										
		1.811 Equipment hours										
32.99.00.P005		*Scope Allowance - Exterior Improvements*										
32 99 00.005		*Exterior Improvments - Allowance*										
n	0920	Project Allowance_Landscaping	1.00	LS			41,745				41,744.64 /LS	41,745
n	0925	Project Allowance_Site Improvements	1.00	ls			166,979				166,978.610 /ls	166,979
		32 99 00.005 Exterior Improvments - Allowance					*208,723*				*208,723.25 /LS*	*208,723*
		1.00 LS										
		32.99.00.P005 Scope Allowance - Exterior Improvements			*0*	*0*	*208,723*		*0*	*0*	*208,723.25 /LS*	*208,723*
		1.00 LS										
		DIVISION 32 EXTERIOR IMPROVEMENTS			**40,177**	**268,995**	**208,723**		**32,002**	**0**	**549,897.330/LS**	**549,897**
		1.00 LS										
		327.286 Labor hours										
		188.193 Equipment hours										
		006 SITEWORK			***40,177***	***268,995***	***208,723***		***32,002***	***0***		***549,897***
		327.286 Labor hours										
		188.193 Equipment hours										

007 YARD PIPING

DIVISION 03 CONCRETE

03.11.13.500 *Centrate Flow Control Vault - Base Slab - 14' x 14' x 24" Thick*

03 11 13.509		*24" Slab on Grade*										
	3050	C.I.P. concrete forms, slab on grade, edge, wood, 7" to 12" high, 4 use, includes erecting, bracing, stripping and cleaning	112.00	sfca	971	235	-		-	-	10.767 /sfca	1,206
n	9015	C.I.P. concrete forms, bulkhead for slab on grade w/ keyway, up to 12", exp metal, includes erecting, bracing, stripping and cleaning	19.60	sfca	101	15	-		-	-	5.938 /sfca	116

Central Kitsap Treatment Plant Solids Handling

Kitsap County

Detail Report with Contractor Markups

11/17/2023 4:04 PM

Design Stage: Basis of Design Report (15%) - Class 4

Estimate Version: Rev01 / 17-Nov-2023

	Item	Description	Takeoff Qty		Labor Amount	Material Amount	Subcontract Amount	Subcontract Name	Equipment Amount	Other Amount	Total Unit Cost	Total Amount
03 11 13.509		*24" Slab on Grade*										
n	2050	Reinforcing steel, unload and sort, add to base_SLAB ON GRADE	1.313	ton	99	-	-		43	-	108.04 /ton	142
	0600	Reinforcing steel, in place, slab on grade, #3 to #7, A615, grade 60, incl labor for accessories, excl material for accessories	1.313	ton	2,469	3,274	-		-	-	4,374.052 /ton	5,743
	2220	Reinforcing steel, crane cost for handling, 90 picks/day, up to 0.5 Ton/day	1.313	ton	283	-	-		123	-	308.710 /ton	405
	4650	Structural concrete, placing, slab on grade, pumped, over 6" thick, includes leveling (strike off) & consolidation, excludes material	1.50	cy	56	-	-		6	-	41.50 /cy	62
	4650	Structural concrete, placing, slab on grade, pumped, over 6" thick, includes leveling (strike off) & consolidation, excludes material	15.00	cy	560	-	-		63	-	41.501 /cy	623
n	0725	Struct SLAB ON GRADE concrete,ready mix,normal wt,4500 psi,includes local aggregate,sand,portland cement and water,delivered, includes all additives	15.00	CY	-	5,933	-		-	-	395.55 /CY	5,933
n	0725	Struct SLAB ON GRADE concrete,ready mix,normal wt,4500 psi,includes local aggregate,sand,portland cement and water,delivered, includes all additives	1.50	cy	-	593	-		-	-	395.553 /cy	593
n	0255	Concrete finishing, floors, manual screed, bull float, machine float & steel trowel (walk-behind)_SOG	196.00	sf	305	-	-		17	-	1.641 /sf	322
n	0122	Control joint, concrete floor slab, sawcut in green concrete, 1" depth_SOG	9.80	lf	9	1	-		1	-	1.073 /lf	11
n	0215	Control joint, clean out control joint of debris_SOG	9.80	lf	2	-	-			-	0.154 /lf	2
n	0367	Control joint, joint sealant, polyurethane, 1/4" x 1/4" (308 LF/Gal)_SOG	19.60	lf	68	5	-		-	-	3.723 /lf	73
n	0310	Concrete surface treatment, curing, sprayed membrane compound_SOG	1.96	csf	33	25	-		-	-	29.832 /csf	58
	1200	Vapor retarders, building paper, polyethylene vapor barrier, standard, 10 mil (.010" thick)	1.96	sq	52	27	-		-	-	40.694 /sq	80
n	1310	Fill, gravel fill, compacted, under floor slabs, alternate pricing method, 12" deep_SOG	8.00	ecy	186	440	-		16	-	80.208 /ecy	642
n	1136	Hauling, excavated borrow material, loose cubic yards, 20 mile round trip, 0.4 loads/hour, 16.5 c.y. dump trailer, highway haulers, excludes loading	8.00	lcy	139	-	-		156	-	36.849 /lcy	295
		03 11 13.509 24" Slab on Grade			*5,332*	*10,550*			*424*		*1,087.022/CY*	*16,305*
		15.00 CY										
		43.009 Labor hours										
		6.160 Equipment hours										
		03.11.13.500 Centrate Flow Control Vault - Base Slab - 14' x 14' x 24" Thick			*5,332*	*10,550*	*0*		*424*	*0*	*1,087.022/CY*	*16,305*
		15.00 CY										
		43.009 Labor hours										
		6.160 Equipment hours										

AACE Classification Accuracy Range

Upper Range +50% **Lower Range -30%**

Central Kitsap Treatment Plant Solids Handling

Kitsap County

Detail Report with Contractor Markups

11/17/2023 4:04 PM

Design Stage: Basis of Design Report (15%) - Class 4

Estimate Version: Rev01 / 17-Nov-2023

	Item	Description	Takeoff Qty		Labor Amount	Material Amount	Subcontract Amount	Name	Equipment Amount	Other Amount	Total Unit Cost	Total Amount
03.11.13.505		*Centrate Flow Control Vault - Walls - 40' LF x 10' High x 18" Thick*										
03 11 13.509		*24" Slab on Grade*										
	0500	C.I.P. concrete forms, wall, wood bulkhead with 2 piece keyway, 1 use, includes erecting, bracing, stripping and cleaning	20.00	lf	438	117	-		-	-	27.767 /lf	555
	2550	C.I.P. concrete forms, wall, job built, plywood, over 8' to 16' high, 4 use, includes erecting, bracing, stripping and cleaning	800.00	sfca	11,765	1,362	-		-	-	16.408 /sfca	13,127
	5200	Chamfer strip, wood, 3/4" wide	40.00	lf	75	10	-		-	-	2.122 /lf	85
	1400	Tie cones, plastic, for coil tie system, for CIP wall forms, 1/2" bolt diameter x 1" setback length, includes material only	1.00	c	-	112	-		-	-	111.79 /c	112
n	3010	Waterstop, rubber, center bulb, 1/4" thick x 6" wide_WALLS	60.00	lf	409	774	-		-	-	19.708 /lf	1,182
	0100	Splice rebar, standard, self-aligning type, taper threaded, #4 bars, includes holding rebar in place while splicing	25.30	ea	461	557	-		-	-	40.248 /ea	1,018
n	2020	Reinforcing steel, unload and sort, add to base_WALLS	2.30	ton	173	-	-		75	-	108.052 /ton	249
n	2214	Reinforcing steel, crane cost for handling, average, add_WALLS	2.30	ton	188	-	-		82	-	117.44 /ton	270
	0700	Reinforcing steel, in place, walls, #3 to #7, A615, grade 60, incl labor for accessories, excl material for accessories	2.30	ton	3,316	5,736	-		-	-	3,935.304 /ton	9,051
	5100	Structural concrete, placing, walls, pumped, 12" thick, includes leveling (strike off) & consolidation, excludes material	2.30	cy	144	-	-		16	-	69.796 /cy	161
	5100	Structural concrete, placing, walls, pumped, 12" thick, includes leveling (strike off) & consolidation, excludes material	23.00	cy	1,443	-	-		162	-	69.797 /cy	1,605
n	0525	Struct WALLS concrete,ready mix,normal wt,4500 psi,includes local aggregate,sand,portland cement and water,delivered, includes all additives	2.30	cy	-	910	-		-	-	395.557 /cy	910
n	0525	Struct WALLS concrete,ready mix,normal wt,4500 psi,includes local aggregate,sand,portland cement and water,delivered, includes all additives	23.00	CY	-	9,098	-		-	-	395.551 /CY	9,098
n	0210	Control joint, clean out control joint of debris_WALLS	20.00	lf	3	-	-			-	0.154 /lf	3
n	0366	Control joint, joint sealant, polyurethane, 1/4" x 1/4" (308 LF/Gal)_WALLS	20.00	lf	69	5	-		-	-	3.722 /lf	74
	0020	Concrete finishing, walls, includes breaking ties and patching voids	800.00	sf	1,379	55	-		-	-	1.792 /sf	1,434
	0050	Concrete finishing, walls, burlap rub with grout, includes breaking ties and patching voids	400.00	sf	827	28	-		-	-	2.137 /sf	855
		03 11 13.509 24" Slab on Grade			*20,691*	*18,762*			*335*		*1,729.947/CY*	*39,789*
		23.00 CY										
		170.542 Labor hours										
		5.904 Equipment hours										

AACE Classification Accuracy Range

Upper Range +50% **Lower Range -30%**

Central Kitsap Treatment Plant Solids Handling

Kitsap County

Detail Report with Contractor Markups

Item		Description	Takeoff Qty		Labor Amount	Material Amount	Subcontract Amount	Name	Equipment Amount	Other Amount	Total Unit Cost	Total Amount
		03.11.13.505 Centrate Flow Control Vault - Walls - 40' LF x 10' High x 18" Thick			*20,691*	*18,762*	*0*		*335*	*0*	*1,729.947/CY*	*39,789*
		23.00 CY										
		170.542 Labor hours										
		5.904 Equipment hours										
03.11.13.510		*Centrate Flow Control Vault - Walls - 10' x 12' x 12" Thick*										
03 11 13.303		*12" Elevated Slab*										
	6600	Scaffolding, steel tubular, heavy duty shoring for elevated slab forms, floor area, labor only to erect & dismantle, to 14'-8" high	1.00	csf	395	-	-		-	-	394.97 /csf	395
	6600	Scaffolding, steel tubular, heavy duty shoring for elevated slab forms, floor area, labor only to erect & dismantle, to 14'-8" high	1.00	csf	395	-	-		-	-	394.98 /csf	395
	6610	Scaffolding, steel tubular, heavy duty shoring for elevated slab forms, floor area, rent/month of materials only, to 14'-8" high	3.00	csf	-	333	-		-	-	110.923 /csf	333
	6610	Scaffolding, steel tubular, heavy duty shoring for elevated slab forms, floor area, rent/month of materials only, to 14'-8" high	3.00	csf	-	333	-		-	-	110.927 /csf	333
	2150	C.I.P. concrete forms, elevated slab, flat slab with drop panels, to 15' high, 4 use, includes shoring, erecting, bracing, stripping and cleaning	100.00	sf	1,068	378	-		-	-	14.461 /sf	1,446
	7000	C.I.P. concrete forms, elevated slab, edge forms, to 6" high, 4 use, includes shoring, erecting, bracing, stripping and cleaning	83.00	lf	626	44	-		-	-	8.075 /lf	670
n	2040	Reinforcing steel, unload and sort, add to base_ELEVATE SLABS	0.45	ton	34	-	-		15	-	108.067 /ton	49
n	2218	Reinforcing steel, crane cost for handling, average, add_ELEVATED SLABS	0.45	ton	37	-	-		16	-	117.444 /ton	53
	0400	Reinforcing steel, in place, elevated slabs, #4 to #7, A615, grade 60, incl labor for accessories, excl material for accessories	0.45	ton	671	1,122	-		-	-	3,984.96 /ton	1,793
	1500	Structural concrete, placing, elevated slab, pumped, 6" to 10" thick, includes leveling (strike off) & consolidation, excludes material	4.00	cy	173	-	-		19	-	47.985 /cy	192
	1500	Structural concrete, placing, elevated slab, pumped, 6" to 10" thick, includes leveling (strike off) & consolidation, excludes material	0.40	cy	17	-	-		2	-	47.975 /cy	19
n	0825	Struct ELEV SLAB concrete,ready mix,normal wt,4500 psi,includes local aggregate,sand,portland cement and water,delivered, includes all additives	0.40	cy	-	158	-		-	-	395.575 /cy	158
n	0825	Struct ELEV SLAB concrete,ready mix,normal wt,4500 psi,includes local aggregate,sand,portland cement and water,delivered, includes all additives	4.00	CY	-	1,582	-		-	-	395.548 /CY	1,582
n	0256	Concrete finishing, floors, manual screed, bull float, machine float & steel trowel (walk-behind)_ELEV SLAB	100.00	sf	156	-	-		8	-	1.641 /sf	164

Central Kitsap Treatment Plant Solids Handling

Kitsap County

Detail Report with Contractor Markups

Item		Description	Takeoff Qty		Labor Amount	Material Amount	Subcontract Amount	Subcontract Name	Equipment Amount	Other Amount	Total Unit Cost	Total Amount
03 11 13.303		*12" Elevated Slab*										
n	9000	Concrete finishing, elev slabs, includes patching voids	100.00	sf	172	5	-		-	-	1.775 /sf	177
		03 11 13.303 12" Elevated Slab			*3,743*	*3,956*			*61*		*1,939.923/CY*	*7,760*
		4.00 CY										
		30.667 Labor hours										
		1.201 Equipment hours										
		03.11.13.510 Centrate Flow Control Vault - Walls - 10' x 12' x 12" Thick			*3,743*	*3,956*	*0*		*61*	*0*	*1,939.923/CY*	*7,760*
		4.00 CY										
		30.667 Labor hours										
		1.201 Equipment hours										
		DIVISION 03 CONCRETE			**29,766**	**33,268**	**0**		**820**	**0**	**1,520.329/CY**	**63,854**
		42.00 CY										
		244.218 Labor hours										
		13.265 Equipment hours										

DIVISION 05 METALS

05.50.00.005 Centrate Flow Control Vault - Aluminum Ladder - 10' High

05 50 00.450		*Metal Ladders - Aluminum*										
	0400	Ladder, shop fabricated, aluminum, 20" W, bolted to concrete, excl cage	10.00	LF	577	1,054	-		33	-	166.457 /LF	1,665
		05 50 00.450 Metal Ladders - Aluminum			*577*	*1,054*			*33*		*166.457/LF*	*1,665*
		10.00 LF										
		3.765 Labor hours										
		0.941 Equipment hours										
		05.50.00.005 Centrate Flow Control Vault - Aluminum Ladder - 10' High			*577*	*1,054*	*0*		*33*	*0*	*166.457/LF*	*1,665*
		10.00 LF										
		3.765 Labor hours										
		0.941 Equipment hours										
		DIVISION 05 METALS			**577**	**1,054**	**0**		**33**	**0**		**1,665**
		3.765 Labor hours										
		0.941 Equipment hours										

DIVISION 08 OPENINGS

AACE Classification Accuracy Range

Upper Range +50% **Lower Range -30%**

Central Kitsap Treatment Plant Solids Handling

Kitsap County

Detail Report with Contractor Markups

Item		Description	Takeoff Qty		Labor Amount	Material Amount	Subcontract Amount	Name	Equipment Amount	Other Amount	Total Unit Cost	Total Amount
08.31.00.005		*Centrate Flow Control Vault - Double Leaf Access Door - 4' x 4'*										
08 31 00.030		*Access Door - Double Leaf - 4' x 4'*										
	0300	Doors, specialty, access, floor, industrial, steel, 300 psf L.L., double leaf, 4' x 4', 455 lb	1.00	EA	2,421	6,944	-		-	-	9,364.09 /EA	9,364
		08 31 00.030 Access Door - Double Leaf - 4' x 4'			*2,421*	*6,944*					*9,364.09 /EA*	*9,364*
		1.00 EA										
		16.00 Labor hours										
		08.31.00.005 Centrate Flow Control Vault - Double Leaf Access Door - 4' x 4'			*2,421*	*6,944*	*0*		*0*	*0*	*9,364.09 /EA*	*9,364*
		1.00 EA										
		16.00 Labor hours										
		DIVISION 08 OPENINGS			**2,421**	**6,944**	**0**		**0**	**0**	**9,364.09 /EA**	**9,364**
		1.00 EA										
		16.00 Labor hours										
DIVISION 33		**UTILITIES (BURIED PIPE AND VALVES)**										
33.05.16.005		*Septage Bypass - Precast Manhole - 60" Dia - 10' Deep*										
33 05 16.060		*Precast Concrete Manhole Structure, 60" (05')*										
	4650	Structural concrete, placing, slab on grade, pumped, over 6" thick, includes leveling (strike off) & consolidation, excludes material	2.00	cy	78	-	-		9	-	43.525 /cy	87
n	0725	Struct SLAB ON GRADE concrete,ready mix,normal wt,4500 psi,includes local aggregate,sand,portland cement and water,delivered, includes all additives	2.00	CY	-	837	-		-	-	418.555 /CY	837
n	1310	Fill, gravel fill, compacted, under floor slabs, alternate pricing method, 12" deep_SOG	4.00	ecy	97	233	-		8	-	84.615 /ecy	338
n	1135	Hauling, excavated borrow material, loose cubic yards, 20 mile round trip, 0.4 loads/hour, 16.5 c.y. dump trailer, highway haulers, excludes loading	3.00	lcy	55	-	-		62	-	38.91 /lcy	117
	2700	Utility area drain, catch basins or manholes frames and covers, cast iron, watertight, 32" diameter, 575 lb., excluding footing & excavation	1.00	ea	458	1,729	-		63	-	2,249.63 /ea	2,250
	1170	Storm drainage manholes, frames and covers, concrete, precast, 5' I.D., 8' deep, excludes footing, excavation, backfill, frame and cover	1.00	ea	1,830	5,596	-		253	-	7,679.17 /ea	7,679
n	1180	Storm drainage manholes,frames and covers,concrete,precast,5'id, excludes footing,excavation,backfill,frame and cover,add for depths over 8'	2.00	vlf	458	1,911	-		63	-	1,215.80 /vlf	2,432

AACE Classification Accuracy Range

Upper Range +50% **Lower Range -30%**

Central Kitsap Treatment Plant Solids Handling

Kitsap County

Detail Report with Contractor Markups

	Item	Description	Takeoff Qty		Labor Amount	Material Amount	Subcontract Amount	Name	Equipment Amount	Other Amount	Total Unit Cost	Total Amount
33 05 16.060		*Precast Concrete Manhole Structure, 60" (05')*										
	1400	Storm drainage manholes, frames and covers, precast concrete, 5' diameter manhole, 8" thick top	1.00	EA	366	591	-		51	-	1,008.09 /EA	1,008
	4000	Storm drainage manholes, frames and covers, steps, standard sizes, galvanized steel	10.00	ea	254	455	-		-	-	70.899 /ea	709
	9000	Storm Drainage Manholes, Frames, and Covers, Rubber Boot for Connection to Pipe	6.00	dia"	-	46	-		-	-	7.73 /dia"	46
		33 05 16.060 Precast Concrete Manhole Structure, 60" (05')			*3,595*	*11,398*			*510*		*15,503.21 /EA*	*15,503*
		1.00 EA										
		31.209 Labor hours										
		10.360 Equipment hours										
		33.05.16.005 Septage Bypass - Precast Manhole - 60" Dia - 10' Deep			*3,595*	*11,398*	*0*		*510*	*0*	*15,503.21 /EA*	*15,503*
		1.00 EA										
		31.209 Labor hours										
		10.360 Equipment hours										
33.05.17.005		*Potable Water - W1 - Copper - 2" Dia - Allowance*										
33 05 17.002		*Buried Pipe, Copper, 02" Dia and Smaller*										
	10000	Total Trench Excavation - (Informational only - NO COST)	3,125.00	cy		-	-			-		
n	7001	Pipeline Testing, Hydro (LF)	2,000.00	lf	10,856	273	-		748	-	5.939 /lf	11,877
	7380	Insulation, pipe covering (price copper tube one size less than I.P.S.), fiberglass with all service jacket, 2" wall, 2" iron pipe size	2,000.00	lf	23,592	19,472	-		-	-	21.532 /lf	43,064
n	0400	Pipe insultn,protctv jacketng,aluminum,metal roll,aluminum with polykrft moisture barrier,smooth,.016"thk,6"id,cut from roll goods,size based insulatn	2,000.00	lf	31,456	9,608	-		-	-	20.532 /lf	41,064
	1280	Pipe insulation, protective jacketing, aluminum, fitting covers, 90> LR elbow, 2 piece, 6", size based on OD of insulation	50.00	ea	1,154	1,169	-		-	-	46.463 /ea	2,323
	2140	Pipe insulation, protective jacketing, aluminum, fitting covers, 45> elbow, 2 piece, 6", size based on OD of insulation	50.00	ea	1,154	910	-		-	-	41.277 /ea	2,064
	3130	Pipe insulation, protective jacketing, aluminum, fitting covers, tee, 4 piece, 6", size based on OD of insulation	10.00	ea	332	846	-		-	-	117.799 /ea	1,178
	1260	Pipe, copper, tubing, solder, 2" diameter, type K, includes coupling & clevis hanger assembly 10' O.C.	2,000.00	LF	62,851	143,763	-		-	-	103.307 /LF	206,614
	0160	Elbow, 90 Deg., copper, wrought, copper x copper, 2"	50.00	ea	5,714	5,368	-		-	-	221.643 /ea	11,082
	0340	Elbow, 45 Deg., copper, wrought, copper x copper, 2"	50.00	ea	5,714	4,959	-		-	-	213.453 /ea	10,673
	0540	Tee, copper, wrought, copper x copper, 2"	10.00	ea	1,796	1,893	-		-	-	368.833 /ea	3,688
n	09010	Trench, Backfill, and Compaction w/ Crew 2	6.00	days	35,786	-	-		21,331	-	9,519.470 /days	57,117

AACE Classification Accuracy Range

Upper Range +50% **Lower Range -30%**

Central Kitsap Treatment Plant Solids Handling

Kitsap County

Detail Report with Contractor Markups

	Item	Description	Takeoff Qty		Labor Amount	Material Amount	Subcontract Amount	Subcontract Name	Equipment Amount	Other Amount	Total Unit Cost	Total Amount
33 05 17.002		*Buried Pipe, Copper, 02" Dia and Smaller*										
	0050	Fill by borrow and utility bedding, for pipe and conduit, crushed or screened bank run gravel, excludes compaction	817.00	lcy	14,953	46,090	-		2,068	-	77.247 /lcy	63,111
n	0560	Hauling,excavated borrow material,loose cubic yards,20 mile round trip,0.4 load/hr,base wide rate,12 cy truck,highway haulers,excludes loading	940.00	lcy	23,673	-	-		24,529	-	51.279 /lcy	48,202
	00500	6" Wide Underground Utility Marking Tape	20.00	clf	121	1,383	-		-	-	75.198 /clf	1,504
		33 05 17.002 Buried Pipe, Copper, 02" Dia and Smaller			*219,150*	*235,734*			*48,677*		*251.781/LF*	*503,561*
		2,000.00 LF										
		1,635.547 Labor hours										
		556.396 Equipment hours										
		33.05.17.005 Potable Water - W1 - Copper - 2" Dia - Allowance			*219,150*	*235,734*	*0*		*48,677*	*0*	*251.781/LF*	*503,561*
		2,000.00 LF										
		1,635.547 Labor hours										
		556.396 Equipment hours										
33.05.18.005		*Natural Gas Pipe - Steel - 3" Dia - Allowance*										
33 05 18.003		*Buried Pipe, Gas Pipe, 03" Dia*										
	10000	Total Trench Excavation - (Informational only - NO COST)	3,213.00	cy		-	-			-		
n	7001	Pipeline Testing, Hydro (LF)	2,000.00	lf	10,856	273	-		748	-	5.939 /lf	11,877
	7400	Insulation, pipe covering (price copper tube one size less than I.P.S.), fiberglass with all service jacket, 2" wall, 3" iron pipe size	2,000.00	lf	26,541	30,936	-		-	-	28.739 /lf	57,477
n	0430	Pipe insultn,protctv jacketng,aluminum,metal roll,aluminum with polykrft moisture barrier,smooth,.016"thk,7"id,cut from roll goods,size based insulatn	2,000.00	lf	33,176	10,846	-		-	-	22.011 /lf	44,022
	1310	Pipe insulation, protective jacketing, aluminum, fitting covers, 90> LR elbow, 2 piece, 7", size based on OD of insulation	50.00	ea	1,249	1,711	-		-	-	59.192 /ea	2,960
	2160	Pipe insulation, protective jacketing, aluminum, fitting covers, 45> elbow, 2 piece, 7", size based on OD of insulation	50.00	ea	1,249	1,256	-		-	-	50.093 /ea	2,505
	3150	Pipe insulation, protective jacketing, aluminum, fitting covers, tee, 4 piece, 7", size based on OD of insulation	10.00	ea	366	928	-		-	-	129.418 /ea	1,294
	2090	Pipe, steel, black, welded, 3" diameter, schedule 40, Spec. A-53, includes yoke & roll hanger assembly, sized for covering, 10' OC	2,000.00	LF	107,498	58,779	-		8,791	-	87.534 /LF	175,068
	9300	Pipe, steel, Welding labor per joint, 3" pipe size, schedule 40, welding	200.00	ea	38,520	-	-		3,150	-	208.352 /ea	41,670
	3120	Elbow, 90 Deg., steel, carbon steel, black, long radius, butt weld, standard weight, 3" pipe size, includes 1 weld per joint and weld machine	50.00	ea	16,509	3,003	-		1,350	-	417.226 /ea	20,861

Central Kitsap Treatment Plant Solids Handling

Kitsap County

Detail Report with Contractor Markups

	Item	Description	Takeoff Qty		Labor Amount	Material Amount	Subcontract Amount	Subcontract Name	Equipment Amount	Other Amount	Total Unit Cost	Total Amount
33 05 18.003		*Buried Pipe, Gas Pipe, 03" Dia*										
	3280	Elbow, 45 Deg., steel, carbon steel, black, long radius, butt weld, standard weight, 3" pipe size, includes 1 weld per joint and weld machine	50.00	ea	16,509	2,093	-		1,350	-	399.029 /ea	19,951
	3430	Tee, steel, carbon steel, black, straight, butt weld, standard weight, 3" pipe size, includes 1 weld per joint and weld machine	10.00	ea	5,778	2,875	-		473	-	912.582 /ea	9,126
n	09010	Trench, Backfill, and Compaction w/ Crew 2	6.00	days	35,786	-	-		21,331	-	9,519.468 /days	57,117
	0050	Fill by borrow and utility bedding, for pipe and conduit, crushed or screened bank run gravel, excludes compaction	864.00	lcy	15,813	48,741	-		2,187	-	77.247 /lcy	66,741
n	0560	Hauling,excavated borrow material,loose cubic yards,20 mile round trip,0.4 load/hr,base wide rate,12 cy truck,highway haulers,excludes loading	994.00	lcy	25,033	-	-		25,939	-	51.279 /lcy	50,971
	00500	6" Wide Underground Utility Marking Tape	20.00	clf	121	1,383	-		-	-	75.198 /clf	1,504
		33 05 18.003 Buried Pipe, Gas Pipe, 03" Dia			*335,003*	*162,824*			*65,318*		*281.573/LF*	*563,145*
		2,000.00 LF										
		2,486.288 Labor hours										
		1,209.691 Equipment hours										
		33.05.18.005 Natural Gas Pipe - Steel - 3" Dia - Allowance			*335,003*	*162,824*	*0*		*65,318*	*0*	*281.573/LF*	*563,145*
		2,000.00 LF										
		2,486.288 Labor hours										
		1,209.691 Equipment hours										
33.05.19.005		*D Drain Pipe - Ductile Iron - 04" Dia*										
33 05 19.004		*Buried Pipe, Ductile Iron, 04" Dia*										
n	7040	Rent trench box, 7200 lbs, 6' x 20'	1.00	day	-	-	-		206	-	206.17 /day	206
	10000	Total Trench Excavation - (Informational only - NO COST)	33.00	cy		-	-			-		
n	7001	Pipeline Testing, Hydro (LF)	20.00	lf	109	3	-		7	-	5.938 /lf	119
n	09010	Trench, Backfill, and Compaction w/ Crew 2	1.00	days	5,964	-	-		3,555	-	9,519.49 /days	9,519
	0050	Fill by borrow and utility bedding, for pipe and conduit, crushed or screened bank run gravel, excludes compaction	9.00	lcy	165	508	-		23	-	77.246 /lcy	695
n	0560	Hauling,excavated borrow material,loose cubic yards,20 mile round trip,0.4 load/hr,base wide rate,12 cy truck,highway haulers,excludes loading	11.00	lcy	277	-	-		287	-	51.28 /lcy	564
	00500	6" Wide Underground Utility Marking Tape	1.00	clf	6	69	-		-	-	75.20 /clf	75
n	2020	Distribution piping,DIP,cement lined,fastite,20' lengths, 04"dia, Press Class 350, Excludes excavation, backfill, bedding	20.00	LF	292	987	-		141	-	71.021 /LF	1,420
n	4100	Distribution Piping,DIP,Flex-Ring Joint, 04"dia,additional per linear foot of restrained pipe	20.00	lf		291	-			-	14.559 /lf	291
	8200	Fitting, 45 degree bend,DIP,cement lined,MJ,4"dia,C110 water piping	2.00	ea	195	320	-		7	-	261.025 /ea	522
n	4701	DIP,Polywrap 8 mil LDT 500ft,4"dia	1.00	roll	123	437	-		-	-	559.66 /roll	560

Central Kitsap Treatment Plant Solids Handling

Kitsap County

Detail Report with Contractor Markups

	Item	Description	Takeoff Qty		Labor Amount	Material Amount	Subcontract Amount	Subcontract Name	Equipment Amount	Other Amount	Total Unit Cost	Total Amount
		33 05 19.004 Buried Pipe, Ductile Iron, 04" Dia			*7,130*	*2,615*			*4,227*		*698.61 /LF*	*13,972*
		20.00 LF										
		61.554 Labor hours										
		59.896 Equipment hours										
		33.05.19.005 D Drain Pipe - Ductile Iron - 04" Dia			*7,130*	*2,615*	*0*		*4,227*	*0*	*698.61 /LF*	*13,972*
		20.00 LF										
		61.554 Labor hours										
		59.896 Equipment hours										
33.05.19.010		*D Drain Pipe - Ductile Iron - 06" Dia*										
33 05 19.006		*Buried Pipe, Ductile Iron, 06" Dia*										
n	7040	Rent trench box, 7200 lbs, 6' x 20'	1.00	day	-	-	-		206	-	206.15 /day	206
	10000	Total Trench Excavation - (Informational only - NO COST)	235.00	cy		-	-			-		
n	7001	Pipeline Testing, Hydro (LF)	135.00	lf	733	18	-		50	-	5.939 /lf	802
n	09010	Trench, Backfill, and Compaction w/ Crew 2	1.00	days	5,964	-	-		3,555	-	9,519.470 /days	9,519
	0050	Fill by borrow and utility bedding, for pipe and conduit, crushed or screened bank run gravel, excludes compaction	68.00	lcy	1,245	3,836	-		172	-	77.247 /lcy	5,253
n	0560	Hauling,excavated borrow material,loose cubic yards,20 mile round trip,0.4 load/hr,base wide rate,12 cy truck,highway haulers,excludes loading	79.00	lcy	1,990	-	-		2,062	-	51.279 /lcy	4,051
	00500	6" Wide Underground Utility Marking Tape	2.00	clf	12	138	-		-	-	75.185 /clf	150
n	2040	Distribution piping,DIP,cement lined,fastite,20' lengths, 06"dia, Press Class 350, Excludes excavation, backfill, bedding	135.00	LF	2,191	5,579	-		1,060	-	65.403 /LF	8,829
n	4101	Distribution Piping,DIP,Flex-Ring Joint, 06"dia,additional per linear foot of restrained pipe	135.00	lf		1,965	-			-	14.558 /lf	1,965
	8205	Fitting, 45 degree bend,DIP,cement lined,MJ,6"dia,C110 water piping	3.00	ea	639	943	-		16	-	532.733 /ea	1,598
n	4702	DIP,Polywrap 8 mil LDT 500ft,6"dia	1.00	roll	123	761	-		-	-	883.92 /roll	884
		33 05 19.006 Buried Pipe, Ductile Iron, 06" Dia			*12,896*	*13,242*			*7,121*		*246.359/LF*	*33,258*
		135.00 LF										
		108.850 Labor hours										
		84.082 Equipment hours										
		33.05.19.010 D Drain Pipe - Ductile Iron - 06" Dia			*12,896*	*13,242*	*0*		*7,121*	*0*	*246.359/LF*	*33,258*
		135.00 LF										
		108.850 Labor hours										
		84.082 Equipment hours										
33.05.19.015		*D Drain Pipe - Ductile Iron - 08" Dia*										
33 05 19.008		*Buried Pipe, Ductile Iron, 08" Dia*										
n	7040	Rent trench box, 7200 lbs, 6' x 20'	1.00	day	-	-	-		206	-	206.15 /day	206

Central Kitsap Treatment Plant Solids Handling

Kitsap County

Detail Report with Contractor Markups

	Item	Description	Takeoff Qty		Labor Amount	Material Amount	Subcontract Amount	Subcontract Name	Equipment Amount	Other Amount	Total Unit Cost	Total Amount
33 05 19.008		*Buried Pipe, Ductile Iron, 08" Dia*										
	10000	Total Trench Excavation - (Informational only - NO COST)	83.00	cy		-	-			-		
n	7001	Pipeline Testing, Hydro (LF)	45.00	lf	244	6	-		17	-	5.939 /lf	267
n	09010	Trench, Backfill, and Compaction w/ Crew 2	1.00	days	5,964	-	-		3,555	-	9,519.470 /days	9,519
	0050	Fill by borrow and utility bedding, for pipe and conduit, crushed or screened bank run gravel, excludes compaction	25.00	lcy	458	1,410	-		63	-	77.246 /lcy	1,931
n	0560	Hauling,excavated borrow material,loose cubic yards,20 mile round trip,0.4 load/hr,base wide rate,12 cy truck,highway haulers,excludes loading	30.00	lcy	756	-	-		783	-	51.279 /lcy	1,538
	00500	6" Wide Underground Utility Marking Tape	1.00	clf	6	69	-		-	-	75.20 /clf	75
n	2060	Distribution piping,DIP,cement lined,fastite,20' lengths, 08"dia, Press Class 350, Excludes excavation, backfill, bedding	45.00	LF	730	2,462	-		353	-	78.778 /LF	3,545
n	4102	Distribution Piping,DIP,Flex-Ring Joint, 08"dia,additional per linear foot of restrained pipe	45.00	lf		873	-			-	19.400 /lf	873
n	8010	Fitting, 90 degree bend,DIP,cement lined,MJ, 08"dia,C110 water piping	1.00	ea	329	894	-		7	-	1,229.53 /ea	1,230
	8210	Fitting, 45 degree bend,DIP,cement lined,MJ,8"dia,C110 water piping	2.00	ea	657	908	-		14	-	789.86 /ea	1,580
n	4703	DIP,Polywrap 8 mil LDT 500ft,8"dia	1.00	roll	123	951	-		-	-	1,074.150 /roll	1,074
		33 05 19.008 Buried Pipe, Ductile Iron, 08" Dia			*9,267*	*7,574*			*4,999*		*485.311/LF*	*21,839*
		45.00 LF										
		79.111 Labor hours										
		66.327 Equipment hours										
		33.05.19.015 D Drain Pipe - Ductile Iron - 08" Dia			*9,267*	*7,574*	*0*		*4,999*	*0*	*485.311/LF*	*21,839*
		45.00 LF										
		79.111 Labor hours										
		66.327 Equipment hours										
33.05.19.025		*FOG - Fat, Oil and Grease - Ductile Iron - 04" Dia*										
33 05 19.004		*Buried Pipe, Ductile Iron, 04" Dia*										
n	7040	Rent trench box, 7200 lbs, 6' x 20'	10.00	day	-	-	-		2,062	-	206.154 /day	2,062
	10000	Total Trench Excavation - (Informational only - NO COST)	2,336.00	cy		-	-			-		
n	7001	Pipeline Testing, Hydro (LF)	1,415.00	lf	7,681	193	-		529	-	5.939 /lf	8,403
n	09010	Trench, Backfill, and Compaction w/ Crew 2	10.00	days	59,643	-	-		35,552	-	9,519.472 /days	95,195
	0050	Fill by borrow and utility bedding, for pipe and conduit, crushed or screened bank run gravel, excludes compaction	645.00	lcy	11,805	36,387	-		1,633	-	77.247 /lcy	49,824
n	0560	Hauling,excavated borrow material,loose cubic yards,20 mile round trip,0.4 load/hr,base wide rate,12 cy truck,highway haulers,excludes loading	742.00	lcy	18,686	-	-		19,363	-	51.279 /lcy	38,049
	00500	6" Wide Underground Utility Marking Tape	15.00	clf	91	1,037	-		-	-	75.198 /clf	1,128

AACE Classification Accuracy Range

Upper Range +50% **Lower Range -30%**

Central Kitsap Treatment Plant Solids Handling

Kitsap County

Detail Report with Contractor Markups

	Item	Description	Takeoff Qty		Labor Amount	Material Amount	Subcontract Amount	Subcontract Name	Equipment Amount	Other Amount	Total Unit Cost	Total Amount
33 05 19.004		*Buried Pipe, Ductile Iron, 04" Dia*										
n	2020	Distribution piping,DIP,cement lined,fastite,20' lengths, 04"dia, Press Class 350, Excludes excavation, backfill, bedding	1,415.00	LF	20,665	69,834	-		9,995	-	71.021 /LF	100,494
n	4100	Distribution Piping,DIP,Flex-Ring Joint, 04"dia,additional per linear foot of restrained pipe	750.00	lf		10,919	-			-	14.558 /lf	10,919
n	8000	Fitting, 90 degree bend,DIP,cement lined,MJ, 04"dia,C110 water piping	2.00	ea	195	708	-		7	-	454.66 /ea	909
	8200	Fitting, 45 degree bend,DIP,cement lined,MJ,4"dia,C110 water piping	4.00	ea	389	641	-		14	-	261.033 /ea	1,044
n	4701	DIP,Polywrap 8 mil LDT 500ft,4"dia	3.00	roll	369	1,310	-		-	-	559.663 /roll	1,679
		33 05 19.004 Buried Pipe, Ductile Iron, 04" Dia			*119,523*	*121,028*			*69,155*		*218.873/LF*	*309,706*
		1,415.00 LF										
		1,010.464 Labor hours										
		825.966 Equipment hours										
		33.05.19.025 FOG - Fat, Oil and Grease - Ductile Iron - 04" Dia			*119,523*	*121,028*	*0*		*69,155*	*0*	*218.873/LF*	*309,706*
		1,415.00 LF										
		1,010.464 Labor hours										
		825.966 Equipment hours										
33.05.19.030		*Primary Sludge - Ductile Iron - 06" Dia*										
33 05 19.006		*Buried Pipe, Ductile Iron, 06" Dia*										
n	7040	Rent trench box, 7200 lbs, 6' x 20'	8.00	day	-	-	-		1,649	-	206.153 /day	1,649
	10000	Total Trench Excavation - (Informational only - NO COST)	1,959.00	cy		-	-			-		
n	7001	Pipeline Testing, Hydro (LF)	1,125.00	lf	6,107	154	-		421	-	5.939 /lf	6,681
n	09010	Trench, Backfill, and Compaction w/ Crew 2	8.00	days	47,714	-	-		28,442	-	9,519.471 /days	76,156
	0050	Fill by borrow and utility bedding, for pipe and conduit, crushed or screened bank run gravel, excludes compaction	567.00	lcy	10,377	31,986	-		1,435	-	77.247 /lcy	43,799
n	0560	Hauling,excavated borrow material,loose cubic yards,20 mile round trip,0.4 load/hr,base wide rate,12 cy truck,highway haulers,excludes loading	653.00	lcy	16,445	-	-		17,040	-	51.279 /lcy	33,485
	00500	6" Wide Underground Utility Marking Tape	12.00	clf	73	830	-		-	-	75.198 /clf	902
n	2040	Distribution piping,DIP,cement lined,fastite,20' lengths, 06"dia, Press Class 350, Excludes excavation, backfill, bedding	1,125.00	LF	18,255	46,493	-		8,830	-	65.403 /LF	73,578
n	4101	Distribution Piping,DIP,Flex-Ring Joint, 06"dia,additional per linear foot of restrained pipe	750.00	lf		10,919	-			-	14.558 /lf	10,919
n	8005	Fitting, 90 degree bend,DIP,cement lined,MJ, 06"dia,C110 water piping	5.00	ea	1,065	2,737	-		26	-	765.66 /ea	3,828
	8205	Fitting, 45 degree bend,DIP,cement lined,MJ,6"dia,C110 water piping	4.00	ea	852	1,258	-		21	-	532.73 /ea	2,131
n	4702	DIP,Polywrap 8 mil LDT 500ft,6"dia	3.00	roll	369	2,283	-		-	-	883.917 /roll	2,652

Central Kitsap Treatment Plant Solids Handling

Kitsap County

Detail Report with Contractor Markups

	Item	Description	Takeoff Qty		Labor Amount	Material Amount	Subcontract Amount	Subcontract Name	Equipment Amount	Other Amount	Total Unit Cost	Total Amount
		33 05 19.006 Buried Pipe, Ductile Iron, 06" Dia			*101,256*	*96,660*			*57,864*		*227.360/LF*	*255,780*
		1,125.00 LF										
		855.106 Labor hours										
		680.460 Equipment hours										
		33.05.19.030 Primary Sludge - Ductile Iron - 06" Dia			*101,256*	*96,660*	*0*		*57,864*	*0*	*227.360/LF*	*255,780*
		1,125.00 LF										
		855.106 Labor hours										
		680.460 Equipment hours										
33.05.19.035		*Scum - Ductile Iron - 04" Dia*										
33 05 19.004		*Buried Pipe, Ductile Iron, 04" Dia*										
n	7040	Rent trench box, 7200 lbs, 6' x 20'	4.00	day	-	-	-		825	-	206.153 /day	825
	10000	Total Trench Excavation - (Informational only - NO COST)	413.00	cy		-	-			-		
n	7001	Pipeline Testing, Hydro (LF)	250.00	lf	1,357	34	-		93	-	5.939 /lf	1,485
n	09010	Trench, Backfill, and Compaction w/ Crew 2	4.00	days	23,857	-	-		14,221	-	9,519.465 /days	38,078
	0050	Fill by borrow and utility bedding, for pipe and conduit, crushed or screened bank run gravel, excludes compaction	114.00	lcy	2,086	6,431	-		289	-	77.247 /lcy	8,806
n	0560	Hauling,excavated borrow material,loose cubic yards,20 mile round trip,0.4 load/hr,base wide rate,12 cy truck,highway haulers,excludes loading	132.00	lcy	3,324	-	-		3,445	-	51.279 /lcy	6,769
	00500	6" Wide Underground Utility Marking Tape	3.00	clf	18	207	-		-	-	75.197 /clf	226
n	2020	Distribution piping,DIP,cement lined,fastite,20' lengths, 04"dia, Press Class 350, Excludes excavation, backfill, bedding	250.00	LF	3,651	12,338	-		1,766	-	71.021 /LF	17,755
n	4100	Distribution Piping,DIP,Flex-Ring Joint, 04"dia,additional per linear foot of restrained pipe	250.00	lf		3,640	-			-	14.558 /lf	3,640
n	4400	Distribution Piping,DIP,Glass-Lining, 04"dia,additional per linear foot	250.00	lf	-	33,484	-		-	-	133.936 /lf	33,484
n	8000	Fitting, 90 degree bend,DIP,cement lined,MJ, 04"dia,C110 water piping	2.00	ea	195	708	-		7	-	454.655 /ea	909
	8200	Fitting, 45 degree bend,DIP,cement lined,MJ,4"dia,C110 water piping	2.00	ea	195	320	-		7	-	261.030 /ea	522
n	4701	DIP,Polywrap 8 mil LDT 500ft,4"dia	1.00	roll	123	437	-		-	-	559.670 /roll	560
		33 05 19.004 Buried Pipe, Ductile Iron, 04" Dia			*34,806*	*57,599*			*20,652*		*452.230/LF*	*113,057*
		250.00 LF										
		297.689 Labor hours										
		271.237 Equipment hours										
		33.05.19.035 Scum - Ductile Iron - 04" Dia			*34,806*	*57,599*	*0*		*20,652*	*0*	*452.230/LF*	*113,057*
		250.00 LF										
		297.689 Labor hours										
		271.237 Equipment hours										

AACE Classification Accuracy Range

Upper Range +50% **Lower Range -30%**

Central Kitsap Treatment Plant Solids Handling

Kitsap County

Detail Report with Contractor Markups

	Item	Description	Takeoff Qty		Labor Amount	Material Amount	Subcontract Amount	Subcontract Name	Equipment Amount	Other Amount	Total Unit Cost	Total Amount
33.05.19.040		*Septage - Ductile Iron - 04" Dia*										
33 05 19.004		*Buried Pipe, Ductile Iron, 04" Dia*										
n	7040	Rent trench box, 7200 lbs, 6' x 20'	4.00	day	-	-	-		825	-	206.153 /day	825
	10000	Total Trench Excavation - (Informational only - NO COST)	718.00	cy		-	-			-		
n	7001	Pipeline Testing, Hydro (LF)	435.00	lf	2,361	59	-		163	-	5.939 /lf	2,583
n	09010	Trench, Backfill, and Compaction w/ Crew 2	4.00	days	23,857	-	-		14,221	-	9,519.465 /days	38,078
	0050	Fill by borrow and utility bedding, for pipe and conduit, crushed or screened bank run gravel, excludes compaction	198.00	lcy	3,624	11,170	-		501	-	77.247 /lcy	15,295
n	0560	Hauling,excavated borrow material,loose cubic yards,20 mile round trip,0.4 load/hr,base wide rate,12 cy truck,highway haulers,excludes loading	228.00	lcy	5,742	-	-		5,950	-	51.279 /lcy	11,692
	00500	6" Wide Underground Utility Marking Tape	5.00	clf	30	346	-		-	-	75.198 /clf	376
n	2020	Distribution piping,DIP,cement lined,fastite,20' lengths, 04"dia, Press Class 350, Excludes excavation, backfill, bedding	435.00	LF	6,353	21,468	-		3,073	-	71.021 /LF	30,894
n	4100	Distribution Piping,DIP,Flex-Ring Joint, 04"dia,additional per linear foot of restrained pipe	250.00	lf		3,640	-			-	14.558 /lf	3,640
n	8000	Fitting, 90 degree bend,DIP,cement lined,MJ, 04"dia,C110 water piping	2.00	ea	195	708	-		7	-	454.65 /ea	909
	8200	Fitting, 45 degree bend,DIP,cement lined,MJ,4"dia,C110 water piping	2.00	ea	195	320	-		7	-	261.030 /ea	522
n	4701	DIP,Polywrap 8 mil LDT 500ft,4"dia	1.00	roll	123	437	-		-	-	559.66 /roll	560
		33 05 19.004 Buried Pipe, Ductile Iron, 04" Dia			*42,479*	*38,147*			*24,746*		*242.236/LF*	*105,373*
		435.00 LF										
		360.535 Labor hours										
		305.770 Equipment hours										
		33.05.19.040 Septage - Ductile Iron - 04" Dia			*42,479*	*38,147*	*0*		*24,746*	*0*	*242.236/LF*	*105,373*
		435.00 LF										
		360.535 Labor hours										
		305.770 Equipment hours										
33.05.19.045		*Septage Bypass - Ductile Iron - 04" Dia*										
33 05 19.004		*Buried Pipe, Ductile Iron, 04" Dia*										
n	7040	Rent trench box, 7200 lbs, 6' x 20'	4.00	day	-	-	-		825	-	206.153 /day	825
	10000	Total Trench Excavation - (Informational only - NO COST)	495.00	cy		-	-			-		
n	7001	Pipeline Testing, Hydro (LF)	300.00	lf	1,628	41	-		112	-	5.939 /lf	1,782
n	09010	Trench, Backfill, and Compaction w/ Crew 2	4.00	days	23,857	-	-		14,221	-	9,519.465 /days	38,078
	0050	Fill by borrow and utility bedding, for pipe and conduit, crushed or screened bank run gravel, excludes compaction	137.00	lcy	2,507	7,729	-		347	-	77.247 /lcy	10,583
n	0560	Hauling,excavated borrow material,loose cubic yards,20 mile round trip,0.4 load/hr,base wide rate,12 cy truck,highway haulers,excludes loading	158.00	lcy	3,979	-	-		4,123	-	51.279 /lcy	8,102

Central Kitsap Treatment Plant Solids Handling

Kitsap County

Detail Report with Contractor Markups

	Item	Description	Takeoff Qty		Labor Amount	Material Amount	Subcontract Amount	Subcontract Name	Equipment Amount	Other Amount	Total Unit Cost	Total Amount
33 05 19.004		*Buried Pipe, Ductile Iron, 04" Dia*										
	00500	6" Wide Underground Utility Marking Tape	3.00	clf	18	207	-		-	-	75.203 /clf	226
n	2020	Distribution piping,DIP,cement lined,fastite,20' lengths, 04"dia, Press Class 350, Excludes excavation, backfill, bedding	300.00	LF	4,381	14,806	-		2,119	-	71.021 /LF	21,306
n	4100	Distribution Piping,DIP,Flex-Ring Joint, 04"dia,additional per linear foot of restrained pipe	250.00	lf		3,640	-			-	14.558 /lf	3,640
n	8000	Fitting, 90 degree bend,DIP,cement lined,MJ, 04"dia,C110 water piping	1.00	ea	97	354	-		4	-	454.68 /ea	455
	8200	Fitting, 45 degree bend,DIP,cement lined,MJ,4"dia,C110 water piping	2.00	ea	195	320	-		7	-	261.02 /ea	522
n	4701	DIP,Polywrap 8 mil LDT 500ft,4"dia	1.00	roll	123	437	-		-	-	559.66 /roll	560
		33 05 19.004 Buried Pipe, Ductile Iron, 04" Dia			*36,786*	*27,533*			*21,757*		*286.922/LF*	*86,077*
		300.00 LF										
		313.902 Labor hours										
		280.577 Equipment hours										
		33.05.19.045 Septage Bypass - Ductile Iron - 04" Dia			*36,786*	*27,533*	*0*		*21,757*	*0*	*286.922/LF*	*86,077*
		300.00 LF										
		313.902 Labor hours										
		280.577 Equipment hours										
33.05.19.050		*Septage Bypass - Ductile Iron - 08" Dia*										
33 05 19.008		*Buried Pipe, Ductile Iron, 08" Dia*										
n	7040	Rent trench box, 7200 lbs, 6' x 20'	4.00	day	-	-	-		825	-	206.153 /day	825
	10000	Total Trench Excavation - (Informational only - NO COST)	596.00	cy		-	-			-		
n	7001	Pipeline Testing, Hydro (LF)	325.00	lf	1,764	44	-		122	-	5.939 /lf	1,930
n	09010	Trench, Backfill, and Compaction w/ Crew 2	4.00	days	23,857	-	-		14,221	-	9,519.470 /days	38,078
	0050	Fill by borrow and utility bedding, for pipe and conduit, crushed or screened bank run gravel, excludes compaction	180.00	lcy	3,294	10,154	-		456	-	77.247 /lcy	13,904
n	0560	Hauling,excavated borrow material,loose cubic yards,20 mile round trip,0.4 load/hr,base wide rate,12 cy truck,highway haulers,excludes loading	208.00	lcy	5,238	-	-		5,428	-	51.279 /lcy	10,666
	00500	6" Wide Underground Utility Marking Tape	4.00	clf	24	277	-		-	-	75.20 /clf	301
n	2060	Distribution piping,DIP,cement lined,fastite,20' lengths, 08"dia, Press Class 350, Excludes excavation, backfill, bedding	325.00	LF	5,274	17,778	-		2,551	-	78.778 /LF	25,603
n	4102	Distribution Piping,DIP,Flex-Ring Joint, 08"dia,additional per linear foot of restrained pipe	250.00	lf		4,850	-			-	19.399 /lf	4,850
n	8010	Fitting, 90 degree bend,DIP,cement lined,MJ, 08"dia,C110 water piping	4.00	ea	1,314	3,576	-		28	-	1,229.538 /ea	4,918
	8210	Fitting, 45 degree bend,DIP,cement lined,MJ,8"dia,C110 water piping	1.00	ea	329	454	-		7	-	789.85 /ea	790
n	4703	DIP,Polywrap 8 mil LDT 500ft,8"dia	1.00	roll	123	951	-		-	-	1,074.160 /roll	1,074

Central Kitsap Treatment Plant Solids Handling

Kitsap County

Detail Report with Contractor Markups

	Item	Description	Takeoff Qty		Labor Amount	Material Amount	Subcontract Amount	Subcontract Name	Equipment Amount	Other Amount	Total Unit Cost	Total Amount
		33 05 19.008 Buried Pipe, Ductile Iron, 08" Dia			*41,218*	*38,084*			*23,637*		*316.734/LF*	*102,939*
		325.00 LF										
		350.529 Labor hours										
		296.111 Equipment hours										
		33.05.19.050 Septage Bypass - Ductile Iron - 08" Dia			*41,218*	*38,084*	*0*		*23,637*	*0*	*316.734/LF*	*102,939*
		325.00 LF										
		350.529 Labor hours										
		296.111 Equipment hours										
33.05.19.055		*Sludge Transfer - Ductile Iron - 06" Dia*										
33 05 19.006		*Buried Pipe, Ductile Iron, 06" Dia*										
n	7040	Rent trench box, 7200 lbs, 6' x 20'	3.00	day	-	-	-		618	-	206.16 /day	618
	10000	Total Trench Excavation - (Informational only - NO COST)	348.00	cy		-	-			-		
n	7001	Pipeline Testing, Hydro (LF)	200.00	lf	1,086	27	-		75	-	5.939 /lf	1,188
n	09010	Trench, Backfill, and Compaction w/ Crew 2	3.00	days	17,893	-	-		10,666	-	9,519.463 /days	28,558
	0050	Fill by borrow and utility bedding, for pipe and conduit, crushed or screened bank run gravel, excludes compaction	101.00	lcy	1,849	5,698	-		256	-	77.247 /lcy	7,802
n	0560	Hauling,excavated borrow material,loose cubic yards,20 mile round trip,0.4 load/hr,base wide rate,12 cy truck,highway haulers,excludes loading	117.00	lcy	2,946	-	-		3,053	-	51.279 /lcy	6,000
	00500	6" Wide Underground Utility Marking Tape	2.00	clf	12	138	-		-	-	75.20 /clf	150
n	2040	Distribution piping,DIP,cement lined,fastite,20' lengths, 06"dia, Press Class 350, Excludes excavation, backfill, bedding	200.00	LF	3,245	8,265	-		1,570	-	65.403 /LF	13,081
n	4101	Distribution Piping,DIP,Flex-Ring Joint, 06"dia,additional per linear foot of restrained pipe	150.00	lf		2,184	-			-	14.558 /lf	2,184
n	8005	Fitting, 90 degree bend,DIP,cement lined,MJ, 06"dia,C110 water piping	1.00	ea	213	547	-		5	-	765.66 /ea	766
n	4702	DIP,Polywrap 8 mil LDT 500ft,6"dia	1.00	roll	123	761	-		-	-	883.92 /roll	884
		33 05 19.006 Buried Pipe, Ductile Iron, 06" Dia			*27,367*	*17,621*			*16,243*		*306.152/LF*	*61,230*
		200.00 LF										
		233.691 Labor hours										
		209.506 Equipment hours										
		33.05.19.055 Sludge Transfer - Ductile Iron - 06" Dia			*27,367*	*17,621*	*0*		*16,243*	*0*	*306.152/LF*	*61,230*
		200.00 LF										
		233.691 Labor hours										
		209.506 Equipment hours										
33.05.19.060		*Thickened Sludge - Ductile Iron - 06" Dia*										
33 05 19.006		*Buried Pipe, Ductile Iron, 06" Dia*										
n	7040	Rent trench box, 7200 lbs, 6' x 20'	4.00	day	-	-	-		825	-	206.153 /day	825

AACE Classification Accuracy Range

Upper Range +50% **Lower Range -30%**

Central Kitsap Treatment Plant Solids Handling

Kitsap County

Detail Report with Contractor Markups

	Item	Description	Takeoff Qty		Labor Amount	Material Amount	Subcontract Amount	Subcontract Name	Equipment Amount	Other Amount	Total Unit Cost	Total Amount
33 05 19.006		*Buried Pipe, Ductile Iron, 06" Dia*										
	10000	Total Trench Excavation - (Informational only - NO COST)	696.00	cy		-	-			-		
n	7001	Pipeline Testing, Hydro (LF)	400.00	lf	2,171	55	-		150	-	5.939 /lf	2,375
n	09010	Trench, Backfill, and Compaction w/ Crew 2	4.00	days	23,857	-	-		14,221	-	9,519.468 /days	38,078
	0050	Fill by borrow and utility bedding, for pipe and conduit, crushed or screened bank run gravel, excludes compaction	202.00	lcy	3,697	11,395	-		511	-	77.247 /lcy	15,604
n	0560	Hauling,excavated borrow material,loose cubic yards,20 mile round trip,0.4 load/hr,base wide rate,12 cy truck,highway haulers,excludes loading	233.00	lcy	5,868	-	-		6,080	-	51.279 /lcy	11,948
	00500	6" Wide Underground Utility Marking Tape	4.00	clf	24	277	-		-	-	75.195 /clf	301
n	2040	Distribution piping,DIP,cement lined,fastite,20' lengths, 06"dia, Press Class 350, Excludes excavation, backfill, bedding	400.00	LF	6,491	16,531	-		3,140	-	65.403 /LF	26,161
n	4101	Distribution Piping,DIP,Flex-Ring Joint, 06"dia,additional per linear foot of restrained pipe	200.00	lf		2,912	-			-	14.558 /lf	2,912
n	8005	Fitting, 90 degree bend,DIP,cement lined,MJ, 06"dia,C110 water piping	1.00	ea	213	547	-		5	-	765.64 /ea	766
	8205	Fitting, 45 degree bend,DIP,cement lined,MJ,6"dia,C110 water piping	2.00	ea	426	629	-		11	-	532.745 /ea	1,065
n	4702	DIP,Polywrap 8 mil LDT 500ft,6"dia	1.00	roll	123	761	-		-	-	883.90 /roll	884
		33 05 19.006 Buried Pipe, Ductile Iron, 06" Dia			*42,870*	*33,107*			*24,942*		*252.296/LF*	*100,918*
		400.00 LF										
		363.927 Labor hours										
		306.836 Equipment hours										
		33.05.19.060 Thickened Sludge - Ductile Iron - 06" Dia			*42,870*	*33,107*	*0*		*24,942*	*0*	*252.296/LF*	*100,918*
		400.00 LF										
		363.927 Labor hours										
		306.836 Equipment hours										
33.05.19.066		*TWAS - Thickened Waste Activated Sludge - Ductile Iron - 06" Dia*										
33 05 19.006		*Buried Pipe, Ductile Iron, 06" Dia*										
n	7040	Rent trench box, 7200 lbs, 6' x 20'	4.00	day	-	-	-		825	-	206.155 /day	825
	10000	Total Trench Excavation - (Informational only - NO COST)	478.00	cy		-	-			-		
n	7001	Pipeline Testing, Hydro (LF)	275.00	lf	1,493	38	-		103	-	5.939 /lf	1,633
n	09010	Trench, Backfill, and Compaction w/ Crew 2	4.00	days	23,857	-	-		14,221	-	9,519.468 /days	38,078
	0050	Fill by borrow and utility bedding, for pipe and conduit, crushed or screened bank run gravel, excludes compaction	139.00	lcy	2,544	7,841	-		352	-	77.247 /lcy	10,737
n	0560	Hauling,excavated borrow material,loose cubic yards,20 mile round trip,0.4 load/hr,base wide rate,12 cy truck,highway haulers,excludes loading	161.00	lcy	4,055	-	-		4,201	-	51.279 /lcy	8,256
	00500	6" Wide Underground Utility Marking Tape	3.00	clf	18	207	-		-	-	75.193 /clf	226

AACE Classification Accuracy Range

Upper Range +50% **Lower Range -30%**

Central Kitsap Treatment Plant Solids Handling

Kitsap County

Detail Report with Contractor Markups

	Item	Description	Takeoff Qty		Labor Amount	Material Amount	Subcontract Amount	Subcontract Name	Equipment Amount	Other Amount	Total Unit Cost	Total Amount
33 05 19.006		*Buried Pipe, Ductile Iron, 06" Dia*										
n	2040	Distribution piping,DIP,cement lined,fastite,20' lengths, 06"dia, Press Class 350, Excludes excavation, backfill, bedding	275.00	LF	4,462	11,365	-		2,158	-	65.403 /LF	17,986
n	4101	Distribution Piping,DIP,Flex-Ring Joint, 06"dia,additional per linear foot of restrained pipe	150.00	lf		2,184	-			-	14.558 /lf	2,184
n	8005	Fitting, 90 degree bend,DIP,cement lined,MJ, 06"dia,C110 water piping	2.00	ea	426	1,095	-		11	-	765.665 /ea	1,531
	8205	Fitting, 45 degree bend,DIP,cement lined,MJ,6"dia,C110 water piping	2.00	ea	426	629	-		11	-	532.745 /ea	1,065
n	4702	DIP,Polywrap 8 mil LDT 500ft,6"dia	1.00	roll	123	761	-		-	-	883.90 /roll	884
		33 05 19.006 Buried Pipe, Ductile Iron, 06" Dia			*37,404*	*24,120*			*21,881*		*303.290/LF*	*83,405*
		275.00 LF										
		319.104 Labor hours										
		281.181 Equipment hours										
		33.05.19.066 TWAS - Thickened Waste Activated Sludge - Ductile Iron - 06" Dia			*37,404*	*24,120*	*0*		*21,881*	*0*	*303.290/LF*	*83,405*
		275.00 LF										
		319.104 Labor hours										
		281.181 Equipment hours										
33.05.19.070		*WAS - Waste Activated Sludge - Ductile Iron - 06" Dia*										
33 05 19.006		*Buried Pipe, Ductile Iron, 06" Dia*										
n	7040	Rent trench box, 7200 lbs, 6' x 20'	6.00	day	-	-	-		1,237	-	206.155 /day	1,237
	10000	Total Trench Excavation - (Informational only - NO COST)	983.00	cy		-	-			-		
n	7001	Pipeline Testing, Hydro (LF)	565.00	lf	3,067	77	-		211	-	5.939 /lf	3,355
n	09010	Trench, Backfill, and Compaction w/ Crew 2	6.00	days	35,786	-	-		21,331	-	9,519.470 /days	57,117
	0050	Fill by borrow and utility bedding, for pipe and conduit, crushed or screened bank run gravel, excludes compaction	285.00	lcy	5,216	16,078	-		721	-	77.247 /lcy	22,015
n	0560	Hauling,excavated borrow material,loose cubic yards,20 mile round trip,0.4 load/hr,base wide rate,12 cy truck,highway haulers,excludes loading	328.00	lcy	8,260	-	-		8,559	-	51.279 /lcy	16,819
	00500	6" Wide Underground Utility Marking Tape	6.00	clf	36	415	-		-	-	75.197 /clf	451
n	2040	Distribution piping,DIP,cement lined,fastite,20' lengths, 06"dia, Press Class 350, Excludes excavation, backfill, bedding	565.00	LF	9,168	23,350	-		4,435	-	65.403 /LF	36,953
n	4101	Distribution Piping,DIP,Flex-Ring Joint, 06"dia,additional per linear foot of restrained pipe	350.00	lf		5,095	-			-	14.558 /lf	5,095
n	8005	Fitting, 90 degree bend,DIP,cement lined,MJ, 06"dia,C110 water piping	4.00	ea	852	2,190	-		21	-	765.658 /ea	3,063
	8205	Fitting, 45 degree bend,DIP,cement lined,MJ,6"dia,C110 water piping	2.00	ea	426	629	-		11	-	532.745 /ea	1,065
n	4702	DIP,Polywrap 8 mil LDT 500ft,6"dia	2.00	roll	246	1,522	-		-	-	883.905 /roll	1,768

Central Kitsap Treatment Plant Solids Handling

Kitsap County

Detail Report with Contractor Markups

Item		Description	Takeoff Qty		Labor Amount	Material Amount	Subcontract Amount	Subcontract Name	Equipment Amount	Other Amount	Total Unit Cost	Total Amount
		33 05 19.006 Buried Pipe, Ductile Iron, 06" Dia			*63,057*	*49,356*			*36,526*		*263.609/LF*	*148,939*
		565.00 LF										
		535.658 Labor hours 452.814 Equipment hours										
		33.05.19.070 WAS - Waste Activated Sludge - Ductile Iron - 06" Dia			*63,057*	*49,356*	*0*		*36,526*	*0*	*263.609/LF*	*148,939*
		565.00 LF										
		535.658 Labor hours 452.814 Equipment hours										
33.05.24.005		*Hot Water Supply and Return - Steel - 8" Dia - Allowance*										
33 05 24.108		*Buried Pipe, Carbon Steel, 08" Dia*										
	10000	Total Trench Excavation - (Informational only - NO COST)	7,330.00	cy		-	-			-		
n	7001	Pipeline Testing, Hydro (LF)	4,000.00	lf	21,713	546	-		1,496	-	5.939 /lf	23,755
	7450	Insulation, pipe covering (price copper tube one size less than I.P.S.), fiberglass with all service jacket, 2" wall, 7" iron pipe size	400.00	lf	9,437	6,952	-		-	-	40.971 /lf	16,388
n	0540	Pipe insultn,protctv jacktng,aluminum,metal roll,aluminum with polykrft moisture barrier,smooth,.016"thk,12"id,cut from roll goods,size based insulatn	400.00	lf	8,246	3,479	-		-	-	29.313 /lf	11,725
	1420	Pipe insulation, protective jacketing, aluminum, fitting covers, 90> LR elbow, 2 piece, 12", size based on OD of insulation	100.00	ea	2,991	5,914	-		-	-	89.048 /ea	8,905
	2260	Pipe insulation, protective jacketing, aluminum, fitting covers, 45> elbow, 2 piece, 12", size based on OD of insulation	100.00	ea	2,991	4,913	-		-	-	79.039 /ea	7,904
	3250	Pipe insulation, protective jacketing, aluminum, fitting covers, tee, 4 piece, 12", size based on OD of insulation	20.00	ea	965	1,765	-		-	-	136.516 /ea	2,730
	2140	Pipe, steel, black, welded, 8" diameter, schedule 40, Spec. A-53, includes yoke & roll hanger assembly, sized for covering, 10' OC	1,200.00	LF	147,652	193,261	-		7,821	-	290.612 /LF	348,734
	9340	Pipe, steel, Welding labor per joint, 8" pipe size, schedule 40, welding	120.00	ea	55,469	-	-		4,536	-	500.043 /ea	60,005
	3150	Elbow, 90 Deg., steel, carbon steel, black, long radius, butt weld, standard weight, 8" pipe size, includes 1 weld per joint and weld machine	10.00	ea	9,515	4,095	-		504	-	1,411.389 /ea	14,114
	3310	Elbow, 45 Deg., steel, carbon steel, black, long radius, butt weld, standard weight, 8" pipe size, includes 1 weld per joint and weld machine	10.00	ea	9,515	2,893	-		504	-	1,291.283 /ea	12,913
	3460	Tee, steel, carbon steel, black, straight, butt weld, standard weight, 8" pipe size, includes 1 weld per joint and weld machine	20.00	ea	28,546	12,557	-		1,512	-	2,130.730 /ea	42,615
n	09010	Trench, Backfill, and Compaction w/ Crew 2	14.00	days	83,500	-	-		49,773	-	9,519.470 /days	133,273

Central Kitsap Treatment Plant Solids Handling

Kitsap County

Detail Report with Contractor Markups

	Item	Description	Takeoff Qty		Labor Amount	Material Amount	Subcontract Amount	Subcontract Name	Equipment Amount	Other Amount	Total Unit Cost	Total Amount
33 05 24.108		*Buried Pipe, Carbon Steel, 08" Dia*										
	0050	Fill by borrow and utility bedding, for pipe and conduit, crushed or screened bank run gravel, excludes compaction	1,659.00	lcy	30,363	93,590	-		4,200	-	77.247 /lcy	128,152
n	0560	Hauling,excavated borrow material,loose cubic yards,20 mile round trip,0.4 load/hr,base wide rate,12 cy truck,highway haulers,excludes loading	1,909.50	lcy	48,088	-	-		49,829	-	51.279 /lcy	97,917
	00500	6" Wide Underground Utility Marking Tape	40.00	clf	242	2,766	-		-	-	75.198 /clf	3,008
		33 05 24.108 Buried Pipe, Carbon Steel, 08" Dia			*459,232*	*332,732*			*120,174*		*760.115/LF*	*912,137*
		1,200.00 LF										
		3,430.115 Labor hours										
		1,845.877 Equipment hours										
		33.05.24.005 Hot Water Supply and Return - Steel - 8" Dia - Allowance			*459,232*	*332,732*	*0*		*120,174*	*0*	*760.115/LF*	*912,137*
		1,200.00 LF										
		3,430.115 Labor hours										
		1,845.877 Equipment hours										
33.05.31.005		*Sanitary Sewer - PVC SDR 35 - 08" - Allowance*										
33 05 31.208		*Buried Pipe, PVC, 08" Dia*										
	2080	Public Sanitary Utility Sewerage Piping, piping polyvinyl chloride pipe, B & S, 13' lengths, 8" diameter, SDR 35, excludes excavation or backfill	2,000.00	LF	16,938	46,223	-		-	-	31.580 /LF	63,161
	10000	Total Trench Excavation - (Informational only - NO COST)	3,665.00	cy		-	-			-		
n	7001	Pipeline Testing, Hydro (LF)	2,000.00	lf	10,856	273	-		748	-	5.939 /lf	11,877
	2210	Elbow, 90 Deg., plastic, PVC, socket joint, 8", schedule 80	50.00	ea	19,184	32,756	-		-	-	1,038.806 /ea	51,940
	2350	Elbow, 45 Deg., plastic, PVC, socket joint, 8", schedule 80	50.00	ea	19,184	31,391	-		-	-	1,011.509 /ea	50,575
	2500	Tee, plastic, PVC, socket joint, 8", schedule 80	10.00	ea	5,755	9,372	-		-	-	1,512.712 /ea	15,127
n	09010	Trench, Backfill, and Compaction w/ Crew 2	7.00	days	41,750	-	-		24,886	-	9,519.470 /days	66,636
	0050	Fill by borrow and utility bedding, for pipe and conduit, crushed or screened bank run gravel, excludes compaction	1,106.00	lcy	20,242	62,393	-		2,800	-	77.247 /lcy	85,435
n	0560	Hauling,excavated borrow material,loose cubic yards,20 mile round trip,0.4 load/hr,base wide rate,12 cy truck,highway haulers,excludes loading	1,273.00	lcy	32,059	-	-		33,219	-	51.279 /lcy	65,278
	00500	6" Wide Underground Utility Marking Tape	20.00	clf	121	1,383	-		-	-	75.197 /clf	1,504
		33 05 31.208 Buried Pipe, PVC, 08" Dia			*166,090*	*183,791*			*61,653*		*205.767/LF*	*411,534*
		2,000.00 LF										
		1,323.291 Labor hours										
		688.117 Equipment hours										

Central Kitsap Treatment Plant Solids Handling

Kitsap County

Detail Report with Contractor Markups

	Item	Description	Takeoff Qty		Labor Amount	Material Amount	Subcontract Amount	Subcontract Name	Equipment Amount	Other Amount	Total Unit Cost	Total Amount
		33.05.31.005 Sanitary Sewer - PVC SDR 35 - 08" - Allowance			*166,090*	*183,791*	*0*		*61,653*	*0*	*205.767/LF*	*411,534*
		2,000.00 LF										
		1,323.291 Labor hours										
		688.117 Equipment hours										
33.05.31.010		*Non-Potable Washdown Water - PVC - 4" Dia - Allowance*										
33 05 31.204		*Buried Pipe, PVC, 04" Dia*										
	10000	Total Trench Excavation - (Informational only - NO COST)	3,302.00	cy		-	-			-		
n	7001	Pipeline Testing, Hydro (LF)	2,000.00	lf	10,856	273	-		748	-	5.939 /lf	11,877
	02540	Pipe, plastic, PVC, 4" diameter, schedule 80	2,000.00	LF	57,278	48,497	-		-	-	52.887 /LF	105,775
	2190	Elbow, 90 Deg., plastic, PVC, socket joint, 4", schedule 80	50.00	ea	7,004	4,186	-		-	-	223.783 /ea	11,189
	2330	Elbow, 45 Deg., plastic, PVC, socket joint, 4", schedule 80	50.00	ea	7,004	11,465	-		-	-	369.367 /ea	18,468
	2480	Tee, plastic, PVC, socket joint, 4", schedule 80	10.00	ea	2,101	1,183	-		-	-	328.394 /ea	3,284
n	09010	Trench, Backfill, and Compaction w/ Crew 2	7.00	days	41,750	-	-		24,886	-	9,519.471 /days	66,636
	0050	Fill by borrow and utility bedding, for pipe and conduit, crushed or screened bank run gravel, excludes compaction	912.00	lcy	16,691	51,449	-		2,309	-	77.247 /lcy	70,449
n	0560	Hauling,excavated borrow material,loose cubic yards,20 mile round trip,0.4 load/hr,base wide rate,12 cy truck,highway haulers,excludes loading	1,049.00	lcy	26,418	-	-		27,374	-	51.279 /lcy	53,792
	00500	6" Wide Underground Utility Marking Tape	20.00	clf	121	1,383	-		-	-	75.198 /clf	1,504
		33 05 31.204 Buried Pipe, PVC, 04" Dia			*169,222*	*118,435*			*55,317*		*171.487/LF*	*342,974*
		2,000.00 LF										
		1,314.279 Labor hours										
		631.821 Equipment hours										
		33.05.31.010 Non-Potable Washdown Water - PVC - 4" Dia - Allowance			*169,222*	*118,435*	*0*		*55,317*	*0*	*171.487/LF*	*342,974*
		2,000.00 LF										
		1,314.279 Labor hours										
		631.821 Equipment hours										
33.05.39.004		*Storm Water Pipe - RCP - 12" Dia - Allowance*										
33 05 39.112		*Buried Pipe, RCP, 12" Dia*										
	10000	Total Trench Excavation - (Informational only - NO COST)	2,023.00	cy		-	-			-		
	0380	Ground wire, copper wire, bare solid, #2	10.00	clf	2,358	2,566	-		-	-	492.431 /clf	4,924
n	09010	Trench, Backfill, and Compaction w/ Crew 2	4.00	days	23,857	-	-		14,221	-	9,519.470 /days	38,078
	0050	Fill by borrow and utility bedding, for pipe and conduit, crushed or screened bank run gravel, excludes compaction	653.00	lcy	11,951	36,838	-		1,653	-	77.247 /lcy	50,442

Central Kitsap Treatment Plant Solids Handling

Kitsap County

Detail Report with Contractor Markups

	Item	Description	Takeoff Qty		Labor Amount	Material Amount	Subcontract Amount	Subcontract Name	Equipment Amount	Other Amount	Total Unit Cost	Total Amount
33 05 39.112		*Buried Pipe, RCP, 12" Dia*										
n	0560	Hauling,excavated borrow material,loose cubic yards,20 mile round trip,0.4 load/hr,base wide rate,12 cy truck,highway haulers,excludes loading	752.00	lcy	18,938	-	-		19,624	-	51.279 /lcy	38,562
	2010	Public storm utility drainage piping, reinforced concrete pipe (RCP), 12" diameter, 6' lengths, class 3, excludes excavation or backfill, gaskets	1,000.00	LF	35,671	36,305	-		2,531	-	74.507 /LF	74,507
	6200	Public storm utility drainage piping, gasket, concrete pipe joint, 12"	168.00	ea	-	1,743	-		-	-	10.373 /ea	1,743
		33 05 39.112 Buried Pipe, RCP, 12" Dia			*92,776*	*77,451*			*38,029*		*208.256/LF*	*208,256*
		1,000.00 LF										
		802.738 Labor hours										
		434.418 Equipment hours										
		33.05.39.004 Storm Water Pipe - RCP - 12" Dia - Allowance			*92,776*	*77,451*	*0*		*38,029*	*0*	*208.256/LF*	*208,256*
		1,000.00 LF										
		802.738 Labor hours										
		434.418 Equipment hours										
33.05.39.010		*Storm Water Pipe - RCP - 18" Dia - Allowance*										
33 05 39.118		*Buried Pipe, RCP, 18" Dia*										
	10000	Total Trench Excavation - (Informational only - NO COST)	2,324.00	cy		-	-			-		
	0380	Ground wire, copper wire, bare solid, #2	10.00	clf	2,358	2,566	-		-	-	492.428 /clf	4,924
n	09010	Trench, Backfill, and Compaction w/ Crew 2	8.00	days	47,714	-	-		28,442	-	9,519.471 /days	76,156
	0050	Fill by borrow and utility bedding, for pipe and conduit, crushed or screened bank run gravel, excludes compaction	810.00	lcy	14,825	45,695	-		2,050	-	77.247 /lcy	62,570
n	0560	Hauling,excavated borrow material,loose cubic yards,20 mile round trip,0.4 load/hr,base wide rate,12 cy truck,highway haulers,excludes loading	934.00	lcy	23,522	-	-		24,373	-	51.279 /lcy	47,894
	2030	Public storm utility drainage piping, reinforced concrete pipe (RCP), 18" diameter, 6' lengths, class 3, excludes excavation or backfill, gaskets	1,000.00	LF	40,536	50,044	-		2,877	-	93.456 /LF	93,456
	6210	Public Storm Utility Drainage Piping, gasket, concrete pipe joint, 18"	168.00	ea	-	1,651	-		-	-	9.827 /ea	1,651
		33 05 39.118 Buried Pipe, RCP, 18" Dia			*128,954*	*99,956*			*57,741*		*286.651/LF*	*286,651*
		1,000.00 LF										
		1,116.828 Labor hours										
		679.397 Equipment hours										
		33.05.39.010 Storm Water Pipe - RCP - 18" Dia - Allowance			*128,954*	*99,956*	*0*		*57,741*	*0*	*286.651/LF*	*286,651*
		1,000.00 LF										
		1,116.828 Labor hours										
		679.397 Equipment hours										

AACE Classification Accuracy Range

Upper Range +50% **Lower Range -30%**

Central Kitsap Treatment Plant Solids Handling

Kitsap County

Detail Report with Contractor Markups

	Item	Description	Takeoff Qty		Labor Amount	Material Amount	Subcontract Amount	Subcontract Name	Equipment Amount	Other Amount	Total Unit Cost	Total Amount
33.05.39.015		*Storm Water Pipe - Precast Manholes - 48" Dia x 10' Deep - Allowance*										
33 05 16.048		*Precast Concrete Manhole Structure, 48" (04')*										
	4650	Structural concrete, placing, slab on grade, pumped, over 6" thick, includes leveling (strike off) & consolidation, excludes material	10.00	cy	391	-	-		45	-	43.523 /cy	435
n	0725	Struct SLAB ON GRADE concrete,ready mix,normal wt,4500 psi,includes local aggregate,sand,portland cement and water,delivered, includes all additives	10.00	CY	-	4,186	-		-	-	418.55 /CY	4,186
n	1310	Fill, gravel fill, compacted, under floor slabs, alternate pricing method, 12" deep_SOG	3.00	ecy	73	175	-		6	-	84.617 /ecy	254
n	1135	Hauling, excavated borrow material, loose cubic yards, 20 mile round trip, 0.4 loads/hour, 16.5 c.y. dump trailer, highway haulers, excludes loading	15.00	lcy	273	-	-		311	-	38.912 /lcy	584
	2700	Utility area drain, catch basins or manholes frames and covers, cast iron, watertight, 32" diameter, 575 lb., excluding footing & excavation	5.00	ea	2,288	8,644	-		316	-	2,249.624 /ea	11,248
	1130	Storm drainage manholes, frames and covers, concrete, precast, 4' I.D., 8' deep, excludes footing, excavation, backfill, frame and cover	5.00	ea	9,271	19,335	-		1,259	-	5,973.196 /ea	29,866
n	1140	Storm drainage manholes,frames and covers,concrete,precast,4'id, excludes footing,excavation,backfill,frame and cover,add for depths over 8'	10.00	vlf	2,318	2,166	-		315	-	479.822 /vlf	4,798
	1300	Storm drainage manholes, frames and covers, precast concrete, 4' diameter manhole, 8" thick top	5.00	EA	1,716	1,729	-		237	-	736.388 /EA	3,682
	4000	Storm drainage manholes, frames and covers, steps, standard sizes, galvanized steel	50.00	ea	1,270	2,275	-		-	-	70.897 /ea	3,545
	9000	Storm Drainage Manholes, Frames, and Covers, Rubber Boot for Connection to Pipe	420.00	dia"	-	3,248	-		-	-	7.734 /dia"	3,248
		33 05 16.048 Precast Concrete Manhole Structure, 48" (04')			*17,599*	*41,757*			*2,490*		*12,369.14 /EA*	*61,846*
		5.00 EA										
		145.086 Labor hours										
		36.268 Equipment hours										
		33.05.39.015 Storm Water Pipe - Precast Manholes - 48" Dia x 10' Deep - Allowance			*17,599*	*41,757*	*0*		*2,490*	*0*	*12,369.14 /EA*	*61,846*
		5.00 EA										
		145.086 Labor hours										
		36.268 Equipment hours										
33.05.39.020		*Storm Water Pipe - Precast Catch Basins - Allowance*										
33 05 16.315		*Precast Catch Basin, 30" x 30"*										
	01125	Storm drainage catch basin, precast, 30" I.D. SQ, 3' deep, w/ Frame and grate, excludes footing, excavation, backfill	12.00	EA	2,967	21,292	-		1,007	-	2,105.483 /EA	25,266

AACE Classification Accuracy Range

Upper Range +50% **Lower Range -30%**

Central Kitsap Treatment Plant Solids Handling

Kitsap County

Detail Report with Contractor Markups

Item		Description	Takeoff Qty		Labor Amount	Material Amount	Subcontract Amount	Subcontract Name	Equipment Amount	Other Amount	Total Unit Cost	Total Amount
33 05 16.315		*Precast Catch Basin, 30" x 30"*										
n	01127	Storm drainage catch basin, precast, 30" I.D. SQ, add for depths over 3'	36.00	vlf	8,344	10,774	-		1,133	-	562.545 /vlf	20,252
		33 05 16.315 Precast Catch Basin, 30" x 30"			*11,311*	*32,065*			*2,141*		*3,793.118/EA*	*45,517*
		12.00 EA										
		91.50 Labor hours										
		25.50 Equipment hours										
		33.05.39.020 Storm Water Pipe - Precast Catch Basins - Allowance			*11,311*	*32,065*	*0*		*2,141*	*0*	*3,793.118/EA*	*45,517*
		12.00 EA										
		91.50 Labor hours										
		25.50 Equipment hours										
		DIVISION 33 UTILITIES (BURIED PIPE AND VALVES)			**2,178,993**	**1,822,828**	**0**		**785,799**	**0**	**286.856/LF**	**4,787,619**
		16,690.00 LF										
		17,267.001 Labor hours										
		10,238.610 Equipment hours										

DIVISION 40 — PROCESS INTEGRATION (EXPOSED PIPE, VALVES AND GATES)

40.10.15.006 — *Foul Air - Odor Control - FRP Duct - 06" Dia - On Racks*

05 50 00.200		*Pipe Rack - T-Support*										
	0180	Pipe Rack - T-Support	18.00	EA	32,383	77,390	-		-	-	6,098.542 /EA	109,774
		05 50 00.200 Pipe Rack - T-Support			*32,383*	*77,390*					*6,098.542/EA*	*109,774*
		18.00 EA										
		216.00 Labor hours										
40 10 15.000		*Fiberglass Reinforced Plastic Duct*										
n	1009	Fiberglass Pipe, 06" dia, pipe stiffness (SN) 46 PSI, 20' lengths; incl puchase pipe, string, installation	270.00	LF	3,839	32,968	-		2,929	-	147.171 /LF	39,736
n	1006	Fitting,Fiberglass, 90 Deg Elbow	4.00	ea	563	2,069	-		-	-	658.153 /ea	2,633
		40 10 15.000 Fiberglass Reinforced Plastic Duct			*4,402*	*35,038*			*2,929*		*156.921/LF*	*42,369*
		270.00 LF										
		34.592 Labor hours										
		29.792 Equipment hours										
		40.10.15.006 Foul Air - Odor Control - FRP Duct - 06" Dia - On Racks			*36,785*	*112,428*	*0*		*2,929*	*0*	*563.491/LF*	*152,142*
		270.00 LF										
		250.592 Labor hours										

AACE Classification Accuracy Range

Upper Range +50% **Lower Range -30%**

Central Kitsap Treatment Plant Solids Handling

Kitsap County

Detail Report with Contractor Markups

Item		Description	Takeoff Qty		Labor Amount	Material Amount	Subcontract Amount	Subcontract Name	Equipment Amount	Other Amount	Total Unit Cost	Total Amount
		40.10.15.006 Foul Air - Odor Control - FRP Duct - 06" Dia - On Racks			*36,785*	*112,428*	*0*		*2,929*	*0*	*563.491/LF*	*152,142*
		270.00 LF										
		250.592 Labor hours										
		29.792 Equipment hours										
40.10.15.018		*Foul Air - Odor Control - FRP Duct - 18" Dia - On Racks*										
05 50 00.200		*Pipe Rack - T-Support*										
	0180	Pipe Rack - T-Support	10.00	EA	17,991	42,995	-		-	-	6,098.544 /EA	60,985
		05 50 00.200 Pipe Rack - T-Support			*17,991*	*42,995*					*6,098.544/EA*	*60,985*
		10.00 EA										
		120.00 Labor hours										
40 10 15.000		*Fiberglass Reinforced Plastic Duct*										
n	1012	Fiberglass Pipe, 18" dia, pipe stiffness (SN) 46 PSI, 20' lengths; incl puchase pipe, string, installation	100.00	LF	1,422	21,497	-		1,085	-	240.039 /LF	24,004
n	1018	Fiberglass Fitting - 18" Dia - 90 Deg	1.00	ea	358	3,942	-		-	-	4,299.70 /ea	4,300
n	1418	Fiberglass Fitting - 18" Dia - Tee Deg	1.00	ea	358	5,649	-		-	-	6,007.12 /ea	6,007
		40 10 15.000 Fiberglass Reinforced Plastic Duct			*2,138*	*31,088*			*1,085*		*343.108/LF*	*34,311*
		100.00 LF										
		17.134 Labor hours										
		11.034 Equipment hours										
		40.10.15.018 Foul Air - Odor Control - FRP Duct - 18" Dia - On Racks			*20,128*	*74,083*	*0*		*1,085*	*0*	*952.962/LF*	*95,296*
		100.00 LF										
		137.134 Labor hours										
		11.034 Equipment hours										
40.10.15.020		*Foul Air - Odor Control - FRP Duct - 20" Dia - On Racks*										
05 50 00.200		*Pipe Rack - T-Support*										
	0180	Pipe Rack - T-Support	20.00	EA	35,982	120,385	-		-	-	7,818.329 /EA	156,367
		05 50 00.200 Pipe Rack - T-Support			*35,982*	*120,385*					*7,818.329/EA*	*156,367*
		20.00 EA										
		240.00 Labor hours										
40 10 15.000		*Fiberglass Reinforced Plastic Duct*										
n	1014	Fiberglass Pipe, 20" dia, pipe stiffness (SN) 46 PSI, 20' lengths; incl puchase pipe only; excl string, installation	200.00	LF	-	103,187	-		-	-	515.936 /LF	103,187
n	1020	Fiberglass Fitting - 20" Dia - 90	1.00	ea	417	4,822	-		-	-	5,238.92 /ea	5,239
n	1420	Fiberglass Fitting - 20" Dia - Tee	2.00	ea	833	14,251	-		-	-	7,542.055 /ea	15,084

Central Kitsap Treatment Plant Solids Handling
Kitsap County
Detail Report with Contractor Markups

Item	Description	Takeoff Qty	Labor Amount	Material Amount	Subcontract Amount	Subcontract Name	Equipment Amount	Other Amount	Total Unit Cost	Total Amount
	40 10 15.000 Fiberglass Reinforced Plastic Duct		*1,250*	*122,260*					*617.551/LF*	*123,510*
	200.00 LF									
	10.65 Labor hours									
	40.10.15.020 Foul Air - Odor Control - FRP Duct - 20" Dia - On Racks		*37,231*	*242,645*	*0*		*0*	*0*	*1,399.384/LF*	*279,877*
	200.00 LF									
	250.65 Labor hours									
	DIVISION 40 PROCESS INTEGRATION (EXPOSED PIPE, VALVES AND GATES)		**94,145**	**429,156**	**0**		**4,014**	**0**	**925.115/LF**	**527,315**
	570.00 LF									
	638.376 Labor hours									
	40.826 Equipment hours									
	007 YARD PIPING		***2,305,902***	***2,293,250***	***0***		***790,666***	***0***	***312.091/LF***	***5,389,817***
	17,270.00 LF									
	18,169.359 Labor hours									
	10,293.642 Equipment hours									

011 FACILITY OR BUILDING DEMOLITION

DIVISION 02 — EXISTING CONDITIONS

02.41.00.022 — *Demo asphalt paving*

02 41 00.010	*General Site Demolition*									
5010	Demolish, remove pavement & curb, remove bituminous pavement, up to, 3" thick, excludes hauling and disposal fees	150.00	SY	2,017	-	-	958	-	19.830 /SY	2,974
0120	Sawcut asphalt pavement	125.00	lf	324	7	-	54	-	3.080 /lf	385
	02 41 00.010 General Site Demolition			*2,341*	*7*		*1,011*			*3,360*
	14.75 Labor hours									
	14.75 Equipment hours									
	02.41.00.022 Demo asphalt paving			*2,341*	*7*	*0*	*1,011*	*0*	*22.397/SY*	*3,360*
	150.00 SY									
	14.75 Labor hours									
	14.75 Equipment hours									

02.41.00.023 — *Demo concrete paving - new building footprint*

Central Kitsap Treatment Plant Solids Handling

Kitsap County

Detail Report with Contractor Markups

Item		Description	Takeoff Qty		Labor Amount	Material Amount	Subcontract Amount	Subcontract Name	Equipment Amount	Other Amount	Total Unit Cost	Total Amount
02 41 00.010		*General Site Demolition*										
n	0060	Selective concrete demolition, average reinforcing, break into small pieces, excludes shoring, bracing, saw torch cutting, loading, hauling, dumping	30.00	CY	10,679	-	-		1,296	-	399.179 /CY	11,975
		02 41 00.010 General Site Demolition			*10,679*				*1,296*			*11,975*
		75.00 Labor hours 75.00 Equipment hours										
		02.41.00.023 Demo concrete paving - new building footprint			*10,679*	*0*	*0*		*1,296*	*0*	*399.179/CY*	*11,975*
		30.00 CY										
		75.00 Labor hours 75.00 Equipment hours										
02.41.00.024		*Demo Storm Drain*										
02 41 00.010		*General Site Demolition*										
	5600	Demolish, remove pavement & curb with hand held air equipment, excludes hauling	40.00	LF	5,700	-	-		2,259	-	198.989 /LF	7,960
		02 41 00.010 General Site Demolition			*5,700*				*2,259*			*7,960*
		36.924 Labor hours 36.924 Equipment hours										
		02.41.00.024 Demo Storm Drain			*5,700*	*0*	*0*		*2,259*	*0*	*198.989/LF*	*7,960*
		40.00 LF										
		36.924 Labor hours 36.924 Equipment hours										
02.41.00.090		*Load and Haul Demo materials offsite - Site Demo*										
02 41 00.010		*General Site Demolition*										
n	0561	Hauling,demolitiion material, 20 mile round trip,0.4 load/hr,12 cy truck,highway haulers,excludes loading	130.00	Ton	3,223	10,243	-		2,740	-	124.654 /Ton	16,205
n	0020	Load concrete/asphalt/debris for removal	130.00	ton	530	-	-		1,035	-	12.039 /ton	1,565
		02 41 00.010 General Site Demolition			*3,753*	*10,243*			*3,775*			*17,770*
		23.01 Labor hours 23.01 Equipment hours										
		02.41.00.090 Load and Haul Demo materials offsite - Site Demo			*3,753*	*10,243*	*0*		*3,775*	*0*	*136.693/Ton*	*17,770*
		130.00 Ton										
		23.01 Labor hours 23.01 Equipment hours										
02.41.14.052		*Demo Exist Septage Receiving*										

Central Kitsap Treatment Plant Solids Handling

Kitsap County

Detail Report with Contractor Markups

Item		Description	Takeoff Qty		Labor Amount	Material Amount	Subcontract Amount	Name	Equipment Amount	Other Amount	Total Unit Cost	Total Amount
02 41 00.120		*Structure Demolition*										
n	5300	Demo concrete receiving station	2,600.00	SF		-	118,286			-	45.495 /SF	118,286
		02 41 00.120 Structure Demolition					*118,286*					*118,286*
		02.41.14.052 Demo Exist Septage Receiving			*0*	*0*	*118,286*		*0*	*0*	*45.495/SF*	*118,286*
		2,600.00 SF										
02.41.14.053		*Demo Exist Digester Control Building*										
02 41 00.120		*Structure Demolition*										
n	5300	Demo Control Building	1,300.00	SF		-	106,457			-	81.890 /SF	106,457
		02 41 00.120 Structure Demolition					*106,457*					*106,457*
		02.41.14.053 Demo Exist Digester Control Building			*0*	*0*	*106,457*		*0*	*0*		*106,457*
02.41.14.054		*Demo Exist Fuel Tank (DIG 1 & 2)*										
02 41 00.120		*Structure Demolition*										
n	5300	Demo fuel tank	1.00	LS	0	-	27,297		0	-	27,296.80 /LS	27,297
		02 41 00.120 Structure Demolition					*27,297*					*27,297*
		02.41.14.054 Demo Exist Fuel Tank (DIG 1 & 2)			*0*	*0*	*27,297*		*0*	*0*	*27,296.80 /LS*	*27,297*
		1.00 LS										
02.41.14.056		*Demo Exist O&M Building*										
02 41 00.120		*Structure Demolition*										
n	5300	Demo O&M Building	8,870.00	SF		-	290,547			-	32.756 /SF	290,547
		02 41 00.120 Structure Demolition					*290,547*					*290,547*
		02.41.14.056 Demo Exist O&M Building			*0*	*0*	*290,547*		*0*	*0*		*290,547*
02.41.14.058		*Demo Building in New O&M Building Footprint*										
02 41 00.120		*Structure Demolition*										
n	5300	Demo Existing Building w/ paving	7,090.00	SF		-	193,534			-	27.297 /SF	193,534
		02 41 00.120 Structure Demolition					*193,534*					*193,534*
		02.41.14.058 Demo Building in New O&M Building Footprint			*0*	*0*	*193,534*		*0*	*0*	*27.297/SF*	*193,534*
		7,090.00 SF										
02.41.14.060		*Demo Existing Gravidy Thickener Cover*										
02 41 00.120		*Structure Demolition*										
n	5300	Demo Cover	2,250.00	SF		-	49,134			-	21.837 /SF	49,134

AACE Classification Accuracy Range

Upper Range +50% **Lower Range -30%**

Central Kitsap Treatment Plant Solids Handling

Kitsap County

Detail Report with Contractor Markups

Item		Description	Takeoff Qty		Labor Amount	Material Amount	Subcontract Amount	Name	Equipment Amount	Other Amount	Total Unit Cost	Total Amount
		02 41 00.120 Structure Demolition					*49,134*					*49,134*
		02.41.14.060 Demo Existing Gravidy Thickener Cover			*0*	*0*	*49,134*		*0*	*0*		*49,134*
02.41.14.062		*Demo existing in-plant pump station*										
02 41 00.120		*Structure Demolition*										
n	5300	Demo pump station	1.00	LS		-	38,216			-	38,215.51 /LS	38,216
		02 41 00.120 Structure Demolition					*38,216*					*38,216*
		02.41.14.062 Demo existing in-plant pump station			*0*	*0*	*38,216*		*0*	*0*		*38,216*
		DIVISION 02 EXISTING CONDITIONS			**22,473**	**10,250**	**823,471**		**8,341**	**0**		**864,536**
		149.684 Labor hours										
		149.684 Equipment hours										
		011 FACILITY OR BUILDING DEMOLITION			***22,473***	***10,250***	***823,471***		***8,341***	***0***	***28,817.867/CY***	***864,536***
		30.00 CY										
		149.684 Labor hours										
		149.684 Equipment hours										

124 BIOFILTER - Septage Receiving

DIVISION 03 CONCRETE

03.11.13.P015 *Biofilter - Base Slab - 18" Thick - 47' Wide x 56' Long*

03 11 13.506		*18" Slab on Grade*										
	3050	C.I.P. concrete forms, slab on grade, edge, wood, 7" to 12" high, 4 use, includes erecting, bracing, stripping and cleaning	309.00	sfca	2,679	648	-		-	-	10.767 /sfca	3,327
n	9015	C.I.P. concrete forms, bulkhead for slab on grade w/ keyway, up to 12", exp metal, includes erecting, bracing, stripping and cleaning	197.40	sfca	1,019	153	-		-	-	5.938 /sfca	1,172
n	2050	Reinforcing steel, unload and sort, add to base_SLAB ON GRADE	12.863	ton	969	-	-		421	-	108.051 /ton	1,390
	0600	Reinforcing steel, in place, slab on grade, #3 to #7, A615, grade 60, incl labor for accessories, excl material for accessories	12.863	ton	24,187	32,076	-		-	-	4,374.033 /ton	56,263
	2220	Reinforcing steel, crane cost for handling, 90 picks/day, up to 0.5 Ton/day	12.863	ton	2,768	-	-		1,203	-	308.716 /ton	3,971
	4650	Structural concrete, placing, slab on grade, pumped, over 6" thick, includes leveling (strike off) & consolidation, excludes material	147.00	cy	5,485	-	-		616	-	41.502 /cy	6,101
	4650	Structural concrete, placing, slab on grade, pumped, over 6" thick, includes leveling (strike off) & consolidation, excludes material	14.70	cy	549	-	-		62	-	41.502 /cy	610

Central Kitsap Treatment Plant Solids Handling

Kitsap County

Detail Report with Contractor Markups

	Item	Description	Takeoff Qty		Labor Amount	Material Amount	Subcontract Amount	Subcontract Name	Equipment Amount	Other Amount	Total Unit Cost	Total Amount
03 11 13.506		*18" Slab on Grade*										
n	0725	Struct SLAB ON GRADE concrete,ready mix,normal wt,4500 psi,includes local aggregate,sand,portland cement and water,delivered, includes all additives	147.00	CY	-	58,146	-		-	-	395.551 /CY	58,146
n	0725	Struct SLAB ON GRADE concrete,ready mix,normal wt,4500 psi,includes local aggregate,sand,portland cement and water,delivered, includes all additives	14.70	cy	-	5,815	-		-	-	395.551 /cy	5,815
n	0255	Concrete finishing, floors, manual screed, bull float, machine float & steel trowel (walk-behind)_SOG	2,632.00	sf	4,096	-	-		223	-	1.641 /sf	4,319
n	0122	Control joint, concrete floor slab, sawcut in green concrete, 1" depth_SOG	131.60	lf	122	7	-		12	-	1.075 /lf	141
n	0215	Control joint, clean out control joint of debris_SOG	131.60	lf	20	-	-			-	0.155 /lf	20
n	0367	Control joint, joint sealant, polyurethane, 1/4" x 1/4" (308 LF/Gal)_SOG	263.20	lf	907	72	-		-	-	3.722 /lf	980
n	0310	Concrete surface treatment, curing, sprayed membrane compound_SOG	26.32	csf	448	337	-		-	-	29.834 /csf	785
	1200	Vapor retarders, building paper, polyethylene vapor barrier, standard, 10 mil (.010" thick)	26.32	sq	702	369	-		-	-	40.703 /sq	1,071
n	1310	Fill, gravel fill, compacted, under floor slabs, alternate pricing method, 12" deep_SOG	112.00	ecy	2,602	6,164	-		217	-	80.204 /ecy	8,983
n	1136	Hauling, excavated borrow material, loose cubic yards, 20 mile round trip, 0.4 loads/hour, 16.5 c.y. dump trailer, highway haulers, excludes loading	112.00	lcy	1,945	-	-		2,182	-	36.849 /lcy	4,127
		03 11 13.506 18" Slab on Grade			*48,498*	*103,787*			*4,936*		*1,069.536/CY*	*157,222*
		147.00 CY										
		391.069 Labor hours										
		74.996 Equipment hours										
		03.11.13.P015 Biofilter - Base Slab - 18" Thick - 47' Wide x 56' Long			*48,498*	*103,787*	*0*		*4,936*	*0*	*1,069.536/CY*	*157,222*
		147.00 CY										
		391.069 Labor hours										
		74.996 Equipment hours										
03.11.13.P020		*Biofilter - Walls - 230' LF x 7' High x 18" Thick*										
03 11 13.804		*12" CIP Wall*										
	0500	C.I.P. concrete forms, wall, wood bulkhead with 2 piece keyway, 1 use, includes erecting, bracing, stripping and cleaning	81.00	lf	1,776	474	-		-	-	27.767 /lf	2,249
	2550	C.I.P. concrete forms, wall, job built, plywood, over 8' to 16' high, 4 use, includes erecting, bracing, stripping and cleaning	3,220.00	sfca	47,353	5,482	-		-	-	16.408 /sfca	52,835
	5200	Chamfer strip, wood, 3/4" wide	161.00	lf	303	39	-		-	-	2.122 /lf	342
	1400	Tie cones, plastic, for coil tie system, for CIP wall forms, 1/2" bolt diameter x 1" setback length, includes material only	3.00	c	-	335	-		-	-	111.79 /c	335

Central Kitsap Treatment Plant Solids Handling

Kitsap County

Detail Report with Contractor Markups

	Item	Description	Takeoff Qty		Labor Amount	Material Amount	Subcontract Amount	Subcontract Name	Equipment Amount	Other Amount	Total Unit Cost	Total Amount
03 11 13.804		*12" CIP Wall*										
n	3010	Waterstop, rubber, center bulb, 1/4" thick x 6" wide_WALLS	311.00	lf	2,118	4,011	-		-	-	19.708 /lf	6,129
	0100	Splice rebar, standard, self-aligning type, taper threaded, #4 bars, includes holding rebar in place while splicing	66.00	ea	1,203	1,453	-		-	-	40.247 /ea	2,656
n	2020	Reinforcing steel, unload and sort, add to base_WALLS	6.00	ton	452	-	-		196	-	108.053 /ton	648
n	2214	Reinforcing steel, crane cost for handling, average, add_WALLS	6.00	ton	491	-	-		214	-	117.447 /ton	705
	0700	Reinforcing steel, in place, walls, #3 to #7, A615, grade 60, incl labor for accessories, excl material for accessories	6.00	ton	8,650	14,962	-		-	-	3,935.288 /ton	23,612
	5100	Structural concrete, placing, walls, pumped, 12" thick, includes leveling (strike off) & consolidation, excludes material	6.00	cy	377	-	-		42	-	69.80 /cy	419
	5100	Structural concrete, placing, walls, pumped, 12" thick, includes leveling (strike off) & consolidation, excludes material	60.00	cy	3,765	-	-		423	-	69.798 /cy	4,188
n	0525	Struct WALLS concrete,ready mix,normal wt,4500 psi,includes local aggregate,sand,portland cement and water,delivered, includes all additives	6.00	cy	-	2,373	-		-	-	395.55 /cy	2,373
n	0525	Struct WALLS concrete,ready mix,normal wt,4500 psi,includes local aggregate,sand,portland cement and water,delivered, includes all additives	60.00	CY	-	23,733	-		-	-	395.551 /CY	23,733
n	0210	Control joint, clean out control joint of debris_WALLS	81.00	lf	13	-	-			-	0.155 /lf	13
n	0366	Control joint, joint sealant, polyurethane, 1/4" x 1/4" (308 LF/Gal)_WALLS	81.00	lf	279	22	-		-	-	3.722 /lf	301
	0020	Concrete finishing, walls, includes breaking ties and patching voids	3,220.00	sf	5,550	222	-		-	-	1.792 /sf	5,771
	0050	Concrete finishing, walls, burlap rub with grout, includes breaking ties and patching voids	1,610.00	sf	3,330	111	-		-	-	2.137 /sf	3,441
		03 11 13.804 12" CIP Wall			*75,658*	*53,217*			*875*		*2,162.505/CY*	*129,750*
		60.00 CY										
		624.936 Labor hours										
		15.402 Equipment hours										
		03.11.13.P020 Biofilter - Walls - 230' LF x 7' High x 18" Thick			*75,658*	*53,217*	*0*		*875*	*0*		*129,750*
		624.936 Labor hours										
		15.402 Equipment hours										
		DIVISION 03 CONCRETE			**124,156**	**157,004**	**0**		**5,811**	**0**	**1,386.338/CY**	**286,972**
		207.00 CY										
		1,016.005 Labor hours										
		90.398 Equipment hours										

AACE Classification Accuracy Range

Upper Range +50% **Lower Range -30%**

Central Kitsap Treatment Plant Solids Handling

Kitsap County

Detail Report with Contractor Markups

Item	Description	Takeoff Qty		Labor Amount	Material Amount	Subcontract Amount	Subcontract Name	Equipment Amount	Other Amount	Total Unit Cost	Total Amount
DIVISION 44	**POLLUTION CONTROL EQUIPMENT**										
44.31.21.005	*Inorganic biofilter*										
44 31 21.000	*Odor Control Equipment - Package Biofilter System*										
8999	Biofileter Packaged Equipment	1.00	EA	37,515	343,957	-		11,773	-	393,246.02 /EA	393,246
	44 31 21.000 Odor Control Equipment - Package Biofilter System			*37,515*	*343,957*			*11,773*		*393,246.02 /EA*	*393,246*
	1.00 EA										
	284.00 Labor hours										
	150.00 Equipment hours										
	44.31.21.005 Inorganic biofilter			*37,515*	*343,957*	*0*		*11,773*	*0*	*393,246.02 /EA*	*393,246*
	1.00 EA										
	284.00 Labor hours										
	150.00 Equipment hours										
44.31.21.010	*Odor Control Blowers*										
44 31 21.000	*Odor Control Equipment - Package Biofilter System*										
0200	Air and gas handling equipment, blower w/ control panel	2.00	EA	7,877	120,385	-		2,637	-	65,449.75 /EA	130,899
	44 31 21.000 Odor Control Equipment - Package Biofilter System			*7,877*	*120,385*			*2,637*		*65,449.75 /EA*	*130,899*
	2.00 EA										
	56.00 Labor hours										
	56.00 Equipment hours										
	44.31.21.010 Odor Control Blowers			*7,877*	*120,385*	*0*		*2,637*	*0*	*65,449.75 /EA*	*130,899*
	2.00 EA										
	56.00 Labor hours										
	56.00 Equipment hours										
	DIVISION 44 POLLUTION CONTROL EQUIPMENT			**45,393**	**464,342**	**0**		**14,411**	**0**	**174,715.173/EA**	**524,146**
	3.00 EA										
	340.00 Labor hours										
	206.00 Equipment hours										
	124 BIOFILTER - Septage Receiving			***169,549***	***621,347***	***0***		***20,222***	***0***	***811,117.57 /LS***	***811,118***
	1.00 LS										
	1,356.005 Labor hours										

AACE Classification Accuracy Range

Upper Range +50% **Lower Range -30%**

Central Kitsap Treatment Plant Solids Handling

Kitsap County

Detail Report with Contractor Markups

Item	Description	Takeoff Qty	Labor Amount	Material Amount	Subcontract Amount	Subcontract Name	Equipment Amount	Other Amount	Total Unit Cost	Total Amount
	124 BIOFILTER - Septage Receiving		***169,549***	***621,347***	***0***		***20,222***	***0***	***811,117.57 /LS***	***811,118***
	1.00 LS									
	1,356.005 Labor hours									
	296.398 Equipment hours									

125 BIOFILTER - Primary & Septage Thickening

DIVISION 03 **CONCRETE**

03.11.13.P015 *Biofilter - Base Slab - 18" Thick - 47' Wide x 56' Long*

03 11 13.506		*18" Slab on Grade*									
	3050	C.I.P. concrete forms, slab on grade, edge, wood, 7" to 12" high, 4 use, includes erecting, bracing, stripping and cleaning	309.00	sfca	2,679	648	-	-	-	10.767 /sfca	3,327
n	9015	C.I.P. concrete forms, bulkhead for slab on grade w/ keyway, up to 12", exp metal, includes erecting, bracing, stripping and cleaning	197.40	sfca	1,019	153	-	-	-	5.938 /sfca	1,172
n	2050	Reinforcing steel, unload and sort, add to base_SLAB ON GRADE	12.863	ton	969	-	-	421	-	108.052 /ton	1,390
	0600	Reinforcing steel, in place, slab on grade, #3 to #7, A615, grade 60, incl labor for accessories, excl material for accessories	12.863	ton	24,187	32,076	-	-	-	4,374.033 /ton	56,263
	2220	Reinforcing steel, crane cost for handling, 90 picks/day, up to 0.5 Ton/day	12.863	ton	2,768	-	-	1,203	-	308.717 /ton	3,971
	4650	Structural concrete, placing, slab on grade, pumped, over 6" thick, includes leveling (strike off) & consolidation, excludes material	14.70	cy	549	-	-	62	-	41.501 /cy	610
	4650	Structural concrete, placing, slab on grade, pumped, over 6" thick, includes leveling (strike off) & consolidation, excludes material	147.00	cy	5,485	-	-	616	-	41.502 /cy	6,101
n	0725	Struct SLAB ON GRADE concrete,ready mix,normal wt,4500 psi,includes local aggregate,sand,portland cement and water,delivered, includes all additives	147.00	CY	-	58,146	-	-	-	395.551 /CY	58,146
n	0725	Struct SLAB ON GRADE concrete,ready mix,normal wt,4500 psi,includes local aggregate,sand,portland cement and water,delivered, includes all additives	14.70	cy	-	5,815	-	-	-	395.552 /cy	5,815
n	0255	Concrete finishing, floors, manual screed, bull float, machine float & steel trowel (walk-behind)_SOG	2,632.00	sf	4,096	-	-	223	-	1.641 /sf	4,319
n	0122	Control joint, concrete floor slab, sawcut in green concrete, 1" depth_SOG	131.60	lf	122	7	-	12	-	1.076 /lf	142
n	0215	Control joint, clean out control joint of debris_SOG	131.60	lf	20	-	-		-	0.155 /lf	20
n	0367	Control joint, joint sealant, polyurethane, 1/4" x 1/4" (308 LF/Gal)_SOG	263.20	lf	907	72	-	-	-	3.722 /lf	980

AACE Classification Accuracy Range

Upper Range +50% **Lower Range -30%**

Central Kitsap Treatment Plant Solids Handling

Kitsap County

Detail Report with Contractor Markups

	Item	Description	Takeoff Qty		Labor Amount	Material Amount	Subcontract Amount	Subcontract Name	Equipment Amount	Other Amount	Total Unit Cost	Total Amount
03 11 13.506		*18" Slab on Grade*										
n	0310	Concrete surface treatment, curing, sprayed membrane compound_SOG	26.32	csf	448	337	-		-	-	29.835 /csf	785
	1200	Vapor retarders, building paper, polyethylene vapor barrier, standard, 10 mil (.010" thick)	26.32	sq	702	369	-		-	-	40.703 /sq	1,071
n	1310	Fill, gravel fill, compacted, under floor slabs, alternate pricing method, 12" deep_SOG	112.00	ecy	2,602	6,164	-		217	-	80.204 /ecy	8,983
n	1136	Hauling, excavated borrow material, loose cubic yards, 20 mile round trip, 0.4 loads/hour, 16.5 c.y. dump trailer, highway haulers, excludes loading	112.00	lcy	1,945	-	-		2,182	-	36.849 /lcy	4,127
		03 11 13.506 18" Slab on Grade			*48,498*	*103,787*			*4,936*		*1,069.536/CY*	*157,222*
		147.00 CY										
		391.069 Labor hours										
		74.996 Equipment hours										
		03.11.13.P015 Biofilter - Base Slab - 18" Thick - 47' Wide x 56' Long			*48,498*	*103,787*	*0*		*4,936*	*0*	*1,069.536/CY*	*157,222*
		147.00 CY										
		391.069 Labor hours										
		74.996 Equipment hours										
03.11.13.P020		*Biofilter - Walls - 230' LF x 7' High x 18" Thick*										
03 11 13.804		*12" CIP Wall*										
	0500	C.I.P. concrete forms, wall, wood bulkhead with 2 piece keyway, 1 use, includes erecting, bracing, stripping and cleaning	81.00	lf	1,776	474	-		-	-	27.767 /lf	2,249
	2550	C.I.P. concrete forms, wall, job built, plywood, over 8' to 16' high, 4 use, includes erecting, bracing, stripping and cleaning	3,220.00	sfca	47,353	5,482	-		-	-	16.408 /sfca	52,835
	5200	Chamfer strip, wood, 3/4" wide	161.00	lf	303	39	-		-	-	2.122 /lf	342
	1400	Tie cones, plastic, for coil tie system, for CIP wall forms, 1/2" bolt diameter x 1" setback length, includes material only	3.00	c	-	335	-		-	-	111.783 /c	335
n	3010	Waterstop, rubber, center bulb, 1/4" thick x 6" wide_WALLS	311.00	lf	2,118	4,011	-		-	-	19.708 /lf	6,129
	0100	Splice rebar, standard, self-aligning type, taper threaded, #4 bars, includes holding rebar in place while splicing	66.00	ea	1,203	1,453	-		-	-	40.247 /ea	2,656
n	2020	Reinforcing steel, unload and sort, add to base_WALLS	6.00	ton	452	-	-		196	-	108.048 /ton	648
n	2214	Reinforcing steel, crane cost for handling, average, add_WALLS	6.00	ton	491	-	-		214	-	117.452 /ton	705
	0700	Reinforcing steel, in place, walls, #3 to #7, A615, grade 60, incl labor for accessories, excl material for accessories	6.00	ton	8,650	14,962	-		-	-	3,935.285 /ton	23,612
	5100	Structural concrete, placing, walls, pumped, 12" thick, includes leveling (strike off) & consolidation, excludes material	6.00	cy	377	-	-		42	-	69.80 /cy	419

Central Kitsap Treatment Plant Solids Handling

Kitsap County

Detail Report with Contractor Markups

	Item	Description	Takeoff Qty		Labor Amount	Material Amount	Subcontract Amount	Subcontract Name	Equipment Amount	Other Amount	Total Unit Cost	Total Amount
03 11 13.804		*12" CIP Wall*										
	5100	Structural concrete, placing, walls, pumped, 12" thick, includes leveling (strike off) & consolidation, excludes material	60.00	cy	3,765	-	-		423	-	69.798 /cy	4,188
n	0525	Struct WALLS concrete,ready mix,normal wt,4500 psi,includes local aggregate,sand,portland cement and water,delivered, includes all additives	6.00	cy	-	2,373	-		-	-	395.548 /cy	2,373
n	0525	Struct WALLS concrete,ready mix,normal wt,4500 psi,includes local aggregate,sand,portland cement and water,delivered, includes all additives	60.00	CY	-	23,733	-		-	-	395.551 /CY	23,733
n	0210	Control joint, clean out control joint of debris_WALLS	81.00	lf	13	-	-			-	0.155 /lf	13
n	0366	Control joint, joint sealant, polyurethane, 1/4" x 1/4" (308 LF/Gal)_WALLS	81.00	lf	279	22	-		-	-	3.722 /lf	302
	0020	Concrete finishing, walls, includes breaking ties and patching voids	3,220.00	sf	5,550	222	-		-	-	1.792 /sf	5,771
	0050	Concrete finishing, walls, burlap rub with grout, includes breaking ties and patching voids	1,610.00	sf	3,330	111	-		-	-	2.137 /sf	3,441
		03 11 13.804 12" CIP Wall			*75,658*	*53,217*			*875*		*2,162.505/CY*	*129,750*
		60.00 CY										
		624.936 Labor hours										
		15.402 Equipment hours										
		03.11.13.P020 Biofilter - Walls - 230' LF x 7' High x 18" Thick			*75,658*	*53,217*	*0*		*875*	*0*		*129,750*
		624.936 Labor hours										
		15.402 Equipment hours										
		DIVISION 03 CONCRETE			**124,156**	**157,004**	**0**		**5,811**	**0**	**1,386.339/CY**	**286,972**
		207.00 CY										
		1,016.005 Labor hours										
		90.398 Equipment hours										

DIVISION 44 POLLUTION CONTROL EQUIPMENT

44.31.21.005 *Inorganic biofilter*

44 31 21.000		*Odor Control Equipment - Package Biofilter System*										
	8999	Biofileter Packaged Equipment	1.00	EA	37,515	343,957	-		11,773	-	393,246.03 /EA	393,246
		44 31 21.000 Odor Control Equipment - Package Biofilter System			*37,515*	*343,957*			*11,773*		*393,246.03 /EA*	*393,246*
		1.00 EA										
		284.00 Labor hours										
		150.00 Equipment hours										

AACE Classification Accuracy Range

Upper Range +50% **Lower Range -30%**

Central Kitsap Treatment Plant Solids Handling

Kitsap County

Detail Report with Contractor Markups

Item	Description	Takeoff Qty	Labor Amount	Material Amount	Subcontract Amount	Subcontract Name	Equipment Amount	Other Amount	Total Unit Cost	Total Amount
	44.31.21.005 Inorganic biofilter		*37,515*	*343,957*	*0*		*11,773*	*0*	*393,246.03 /EA*	*393,246*
	1.00 EA									
	284.00 Labor hours									
	150.00 Equipment hours									
44.31.21.010	*Odor Control Blowers*									
44 31 21.000	*Odor Control Equipment - Package Biofilter System*									
0200	Air and gas handling equipment, blower w/ control panel	2.00 EA	7,877	120,385	-		2,637	-	65,449.75 /EA	130,900
	44 31 21.000 Odor Control Equipment - Package Biofilter System		*7,877*	*120,385*			*2,637*		*65,449.75 /EA*	*130,900*
	2.00 EA									
	56.00 Labor hours									
	56.00 Equipment hours									
	44.31.21.010 Odor Control Blowers		*7,877*	*120,385*	*0*		*2,637*	*0*	*65,449.75 /EA*	*130,900*
	2.00 EA									
	56.00 Labor hours									
	56.00 Equipment hours									
	DIVISION 44 POLLUTION CONTROL EQUIPMENT		**45,393**	**464,342**	**0**		**14,411**	**0**	**174,715.177/EA**	**524,146**
	3.00 EA									
	340.00 Labor hours									
	206.00 Equipment hours									
	125 BIOFILTER - Primary & Septage Thickening		***169,549***	***621,347***	***0***		***20,222***	***0***	***811,117.61 /LS***	***811,118***
	1.00 LS									
	1,356.005 Labor hours									
	296.398 Equipment hours									

126 BIOFILTER - Centrate Storage

DIVISION 03 **CONCRETE**

03.11.13.P015 *Biofilter - Base Slab - 18" Thick - 47' Wide x 56' Long*

03 11 13.506 *18" Slab on Grade*

Central Kitsap Treatment Plant Solids Handling

Kitsap County

Detail Report with Contractor Markups

	Item	Description	Takeoff Qty		Labor Amount	Material Amount	Subcontract Amount	Subcontract Name	Equipment Amount	Other Amount	Total Unit Cost	Total Amount
03 11 13.506		*18" Slab on Grade*										
	3050	C.I.P. concrete forms, slab on grade, edge, wood, 7" to 12" high, 4 use, includes erecting, bracing, stripping and cleaning	309.00	sfca	2,679	648	-		-	-	10.767 /sfca	3,327
n	9015	C.I.P. concrete forms, bulkhead for slab on grade w/ keyway, up to 12", exp metal, includes erecting, bracing, stripping and cleaning	197.40	sfca	1,019	153	-		-	-	5.938 /sfca	1,172
n	2050	Reinforcing steel, unload and sort, add to base_SLAB ON GRADE	12.863	ton	969	-	-		421	-	108.052 /ton	1,390
	0600	Reinforcing steel, in place, slab on grade, #3 to #7, A615, grade 60, incl labor for accessories, excl material for accessories	12.863	ton	24,187	32,076	-		-	-	4,374.032 /ton	56,263
	2220	Reinforcing steel, crane cost for handling, 90 picks/day, up to 0.5 Ton/day	12.863	ton	2,768	-	-		1,203	-	308.717 /ton	3,971
	4650	Structural concrete, placing, slab on grade, pumped, over 6" thick, includes leveling (strike off) & consolidation, excludes material	14.70	cy	548	-	-		62	-	41.501 /cy	610
	4650	Structural concrete, placing, slab on grade, pumped, over 6" thick, includes leveling (strike off) & consolidation, excludes material	147.00	cy	5,485	-	-		616	-	41.502 /cy	6,101
n	0725	Struct SLAB ON GRADE concrete,ready mix,normal wt,4500 psi,includes local aggregate,sand,portland cement and water,delivered, includes all additives	147.00	CY	-	58,146	-		-	-	395.551 /CY	58,146
n	0725	Struct SLAB ON GRADE concrete,ready mix,normal wt,4500 psi,includes local aggregate,sand,portland cement and water,delivered, includes all additives	14.70	cy	-	5,815	-		-	-	395.550 /cy	5,815
n	0255	Concrete finishing, floors, manual screed, bull float, machine float & steel trowel (walk-behind)_SOG	2,632.00	sf	4,096	-	-		223	-	1.641 /sf	4,319
n	0122	Control joint, concrete floor slab, sawcut in green concrete, 1" depth_SOG	131.60	lf	122	7	-		12	-	1.075 /lf	142
n	0215	Control joint, clean out control joint of debris_SOG	131.60	lf	20	-	-			-	0.155 /lf	20
n	0367	Control joint, joint sealant, polyurethane, 1/4" x 1/4" (308 LF/Gal)_SOG	263.20	lf	907	72	-		-	-	3.722 /lf	980
n	0310	Concrete surface treatment, curing, sprayed membrane compound_SOG	26.32	csf	448	337	-		-	-	29.834 /csf	785
	1200	Vapor retarders, building paper, polyethylene vapor barrier, standard, 10 mil (.010" thick)	26.32	sq	702	369	-		-	-	40.704 /sq	1,071
n	1310	Fill, gravel fill, compacted, under floor slabs, alternate pricing method, 12" deep_SOG	112.00	ecy	2,602	6,164	-		217	-	80.204 /ecy	8,983
n	1136	Hauling, excavated borrow material, loose cubic yards, 20 mile round trip, 0.4 loads/hour, 16.5 c.y. dump trailer, highway haulers, excludes loading	112.00	lcy	1,945	-	-		2,182	-	36.849 /lcy	4,127
		03 11 13.506 18" Slab on Grade			*48,498*	*103,787*			*4,936*		*1,069.536/CY*	*157,222*

147.00 CY

391.069 Labor hours
74.996 Equipment hours

AACE Classification Accuracy Range

Upper Range +50% **Lower Range -30%**

Central Kitsap Treatment Plant Solids Handling

Kitsap County

Detail Report with Contractor Markups

Item		Description	Takeoff Qty		Labor Amount	Material Amount	Subcontract Amount	Name	Equipment Amount	Other Amount	Total Unit Cost	Total Amount
		03.11.13.P015 Biofilter - Base Slab - 18" Thick - 47' Wide x 56' Long			*48,498*	*103,787*	*0*		*4,936*	*0*	*1,069.536/CY*	*157,222*
		147.00 CY										
		391.069 Labor hours 74.996 Equipment hours										
03.11.13.P020		*Biofilter - Walls - 230' LF x 7' High x 18" Thick*										
03 11 13.804		*12" CIP Wall*										
	0500	C.I.P. concrete forms, wall, wood bulkhead with 2 piece keyway, 1 use, includes erecting, bracing, stripping and cleaning	81.00	lf	1,776	474	-		-	-	27.767 /lf	2,249
	2550	C.I.P. concrete forms, wall, job built, plywood, over 8' to 16' high, 4 use, includes erecting, bracing, stripping and cleaning	3,220.00	sfca	47,353	5,482	-		-	-	16.408 /sfca	52,835
	5200	Chamfer strip, wood, 3/4" wide	161.00	lf	303	39	-		-	-	2.122 /lf	342
	1400	Tie cones, plastic, for coil tie system, for CIP wall forms, 1/2" bolt diameter x 1" setback length, includes material only	3.00	c	-	335	-		-	-	111.783 /c	335
n	3010	Waterstop, rubber, center bulb, 1/4" thick x 6" wide_WALLS	311.00	lf	2,118	4,011	-		-	-	19.708 /lf	6,129
	0100	Splice rebar, standard, self-aligning type, taper threaded, #4 bars, includes holding rebar in place while splicing	66.00	ea	1,203	1,453	-		-	-	40.247 /ea	2,656
n	2020	Reinforcing steel, unload and sort, add to base_WALLS	6.00	ton	452	-	-		196	-	108.052 /ton	648
n	2214	Reinforcing steel, crane cost for handling, average, add_WALLS	6.00	ton	491	-	-		214	-	117.453 /ton	705
	0700	Reinforcing steel, in place, walls, #3 to #7, A615, grade 60, incl labor for accessories, excl material for accessories	6.00	ton	8,650	14,962	-		-	-	3,935.288 /ton	23,612
	5100	Structural concrete, placing, walls, pumped, 12" thick, includes leveling (strike off) & consolidation, excludes material	6.00	cy	376	-	-		42	-	69.795 /cy	419
	5100	Structural concrete, placing, walls, pumped, 12" thick, includes leveling (strike off) & consolidation, excludes material	60.00	cy	3,765	-	-		423	-	69.798 /cy	4,188
n	0525	Struct WALLS concrete,ready mix,normal wt,4500 psi,includes local aggregate,sand,portland cement and water,delivered, includes all additives	60.00	CY	-	23,733	-		-	-	395.551 /CY	23,733
n	0525	Struct WALLS concrete,ready mix,normal wt,4500 psi,includes local aggregate,sand,portland cement and water,delivered, includes all additives	6.00	cy	-	2,373	-		-	-	395.553 /cy	2,373
n	0210	Control joint, clean out control joint of debris_WALLS	81.00	lf	13	-	-			-	0.155 /lf	13
n	0366	Control joint, joint sealant, polyurethane, 1/4" x 1/4" (308 LF/Gal)_WALLS	81.00	lf	279	22	-		-	-	3.722 /lf	302
	0020	Concrete finishing, walls, includes breaking ties and patching voids	3,220.00	sf	5,550	222	-		-	-	1.792 /sf	5,771

Central Kitsap Treatment Plant Solids Handling

Kitsap County

Detail Report with Contractor Markups

Item	Description	Takeoff Qty		Labor Amount	Material Amount	Subcontract Amount	Subcontract Name	Equipment Amount	Other Amount	Total Unit Cost	Total Amount
03 11 13.804	*12" CIP Wall*										
0050	Concrete finishing, walls, burlap rub with grout, includes breaking ties and patching voids	1,610.00	sf	3,330	111	-		-	-	2.137 /sf	3,441
	03 11 13.804 12" CIP Wall			*75,658*	*53,217*			*875*		*2,162.504/CY*	*129,750*
	60.00 CY										
	624.936 Labor hours										
	15.402 Equipment hours										
	03.11.13.P020 Biofilter - Walls - 230' LF x 7' High x 18" Thick			*75,658*	*53,217*	*0*		*875*	*0*		*129,750*
	624.936 Labor hours										
	15.402 Equipment hours										
	DIVISION 03 CONCRETE			**124,156**	**157,004**	**0**		**5,811**	**0**	**1,386.339/CY**	**286,972**
	207.00 CY										
	1,016.005 Labor hours										
	90.398 Equipment hours										
DIVISION 44	**POLLUTION CONTROL EQUIPMENT**										
44.31.21.005	*Inorganic biofilter*										
44 31 21.000	*Odor Control Equipment - Package Biofilter System*										
8999	Biofileter Packaged Equipment	1.00	EA	37,515	343,957	-		11,773	-	393,246.03 /EA	393,246
	44 31 21.000 Odor Control Equipment - Package Biofilter System			*37,515*	*343,957*			*11,773*		*393,246.03 /EA*	*393,246*
	1.00 EA										
	284.00 Labor hours										
	150.00 Equipment hours										
	44.31.21.005 Inorganic biofilter			*37,515*	*343,957*	*0*		*11,773*	*0*	*393,246.03 /EA*	*393,246*
	1.00 EA										
	284.00 Labor hours										
	150.00 Equipment hours										
44.31.21.010	*Odor Control Blowers*										
44 31 21.000	*Odor Control Equipment - Package Biofilter System*										
0200	Air and gas handling equipment, blower w/ control panel	2.00	EA	7,877	120,385	-		2,637	-	65,449.76 /EA	130,900
	44 31 21.000 Odor Control Equipment - Package Biofilter System			*7,877*	*120,385*			*2,637*		*65,449.76 /EA*	*130,900*
	2.00 EA										
	56.00 Labor hours										
	56.00 Equipment hours										

AACE Classification Accuracy Range

Upper Range +50% **Lower Range -30%**

Central Kitsap Treatment Plant Solids Handling

Kitsap County

Detail Report with Contractor Markups

Item	Description	Takeoff Qty	Labor Amount	Material Amount	Subcontract Amount	Subcontract Name	Equipment Amount	Other Amount	Total Unit Cost	Total Amount
	44.31.21.010 Odor Control Blowers		*7,877*	*120,385*	*0*		*2,637*	*0*	*65,449.76 /EA*	*130,900*
	2.00 EA									
	56.00 Labor hours									
	56.00 Equipment hours									
	DIVISION 44 POLLUTION CONTROL EQUIPMENT		**45,393**	**464,342**	**0**		**14,411**	**0**	**174,715.183/EA**	**524,146**
	3.00 EA									
	340.00 Labor hours									
	206.00 Equipment hours									
	126 BIOFILTER - Centrate Storage		***169,549***	***621,347***	***0***		***20,222***	***0***	***811,117.62 /LS***	***811,118***
	1.00 LS									
	1,356.005 Labor hours									
	296.398 Equipment hours									

162 CANOPY - PARKING & STORAGE

DIVISION 03 CONCRETE

03.11.13.P010 *O & M Building - Parking Canopy Slab - 12" Thick - 5,860 SF*

03 11 13.504		*12" Slab on Grade*									
	3050	C.I.P. concrete forms, slab on grade, edge, wood, 7" to 12" high, 4 use, includes erecting, bracing, stripping and cleaning	306.20	sfca	2,654	642	-		-	-	10.767 /sfca	3,297
n	9015	C.I.P. concrete forms, bulkhead for slab on grade w/ keyway, up to 12", exp metal, includes erecting, bracing, stripping and cleaning	292.995	sfca	1,513	227	-		-	-	5.938 /sfca	1,740
n	2050	Reinforcing steel, unload and sort, add to base_SLAB ON GRADE	19.075	ton	1,436	-	-		625	-	108.051 /ton	2,061
	0600	Reinforcing steel, in place, slab on grade, #3 to #7, A615, grade 60, incl labor for accessories, excl material for accessories	19.075	ton	35,868	47,567	-		-	-	4,374.033 /ton	83,435
	2220	Reinforcing steel, crane cost for handling, 90 picks/day, up to 0.5 Ton/day	19.075	ton	4,104	-	-		1,785	-	308.718 /ton	5,889
	4650	Structural concrete, placing, slab on grade, pumped, over 6" thick, includes leveling (strike off) & consolidation, excludes material	21.80	cy	813	-	-		91	-	41.501 /cy	905
	4650	Structural concrete, placing, slab on grade, pumped, over 6" thick, includes leveling (strike off) & consolidation, excludes material	218.00	cy	8,134	-	-		913	-	41.502 /cy	9,047

Central Kitsap Treatment Plant Solids Handling

Kitsap County

Detail Report with Contractor Markups

	Item	Description	Takeoff Qty		Labor Amount	Material Amount	Subcontract Amount	Subcontract Name	Equipment Amount	Other Amount	Total Unit Cost	Total Amount
03 11 13.504		*12" Slab on Grade*										
n	0725	Struct SLAB ON GRADE concrete,ready mix,normal wt,4500 psi,includes local aggregate,sand,portland cement and water,delivered, includes all additives	21.80	cy	-	8,623	-		-	-	395.551 /cy	8,623
n	0725	Struct SLAB ON GRADE concrete,ready mix,normal wt,4500 psi,includes local aggregate,sand,portland cement and water,delivered, includes all additives	218.00	CY	-	86,230	-		-	-	395.551 /CY	86,230
n	0255	Concrete finishing, floors, manual screed, bull float, machine float & steel trowel (walk-behind)_SOG	5,859.903	sf	9,120	-	-		496	-	1.641 /sf	9,616
n	0122	Control joint, concrete floor slab, sawcut in green concrete, 1" depth_SOG	292.995	lf	273	15	-		27	-	1.075 /lf	315
n	0215	Control joint, clean out control joint of debris_SOG	292.995	lf	45	-	-			-	0.155 /lf	45
n	0367	Control joint, joint sealant, polyurethane, 1/4" x 1/4" (308 LF/Gal)_SOG	585.99	lf	2,020	161	-		-	-	3.722 /lf	2,181
n	0310	Concrete surface treatment, curing, sprayed membrane compound_SOG	58.599	csf	998	751	-		-	-	29.835 /csf	1,748
	1200	Vapor retarders, building paper, polyethylene vapor barrier, standard, 10 mil (.010" thick)	58.599	sq	1,564	821	-		-	-	40.704 /sq	2,385
n	1310	Fill, gravel fill, compacted, under floor slabs, alternate pricing method, 12" deep_SOG	250.00	ecy	5,808	13,758	-		485	-	80.204 /ecy	20,051
n	1136	Hauling, excavated borrow material, loose cubic yards, 20 mile round trip, 0.4 loads/hour, 16.5 c.y. dump trailer, highway haulers, excludes loading	250.00	lcy	4,342	-	-		4,871	-	36.849 /lcy	9,212
		03 11 13.504 12" Slab on Grade			*78,692*	*158,796*			*9,293*		*1,132.022/CY*	*246,781*
		218.00 CY										
		641.114 Labor hours 148.639 Equipment hours										
		03.11.13.P010 O & M Building - Parking Canopy Slab - 12" Thick - 5,860 SF			*78,692*	*158,796*	*0*		*9,293*	*0*	*1,132.022/CY*	*246,781*
		218.00 CY										
		641.114 Labor hours 148.639 Equipment hours										
		DIVISION 03 CONCRETE			**78,692**	**158,796**	**0**		**9,293**	**0**	**1,132.022/CY**	**246,781**
		218.00 CY										
		641.114 Labor hours 148.639 Equipment hours										

DIVISION 05 METALS

05.50.00.P005 *O & M Building - Parking Metal Canopy - 5,860 SF*

05 50 00.500 *Fabricated, Metal Canopy*

AACE Classification Accuracy Range

Upper Range +50% **Lower Range -30%**

Central Kitsap Treatment Plant Solids Handling

Kitsap County

Detail Report with Contractor Markups

Item		Description	Takeoff Qty		Labor Amount	Material Amount	Subcontract Amount	Name	Equipment Amount	Other Amount	Total Unit Cost	Total Amount
05 50 00.500		*Fabricated, Metal Canopy*										
n	1000	O & M Building - Parking Metal Canopy - 5,860 SF	5,860.00	BSF	-	-	1,066,395		-	-	181.979 /BSF	1,066,395
		05 50 00.500 Fabricated, Metal Canopy					*1,066,395*				*181.979/BSF*	*1,066,395*
		5,860.00 BSF										
		05.50.00.P005 O & M Building - Parking Metal Canopy - 5,860 SF			*0*	*0*	*1,066,395*		*0*	*0*	*181.979/BSF*	*1,066,395*
		5,860.00 BSF										
		DIVISION 05 METALS			**0**	**0**	**1,066,395**		**0**	**0**	**1,066,394.67 /LS**	**1,066,395**
		1.00 LS										
		162 CANOPY - PARKING & STORAGE			***78,692***	***158,796***	***1,066,395***		***9,293***	***0***	***224.091/BSF***	***1,313,176***
		5,860.00 BSF										
		641.114 Labor hours										
		148.639 Equipment hours										

411 IN-PLANT PUMP STATION

DIVISION 03 CONCRETE

03 11 13.305.05 *Elevated Vault Slab, 16" Thick x 75 SF*

03 11 13.305		*16" Elevated Slab*										
	3050	C.I.P. concrete forms, slab on grade, edge, wood, 7" to 12" high, 4 use, includes erecting, bracing, stripping and cleaning	46.175	sfca	400	97	-		-	-	10.767 /sfca	497
n	9015	C.I.P. concrete forms, bulkhead for slab on grade w/ keyway, up to 12", exp metal, includes erecting, bracing, stripping and cleaning	4.998	sfca	26	4	-		-	-	5.934 /sfca	30
n	2050	Reinforcing steel, unload and sort, add to base_SLAB ON GRADE	0.35	ton	26	-	-		11	-	108.00 /ton	38
	0600	Reinforcing steel, in place, slab on grade, #3 to #7, A615, grade 60, incl labor for accessories, excl material for accessories	0.35	ton	658	873	-		-	-	4,374.09 /ton	1,531
	2220	Reinforcing steel, crane cost for handling, 90 picks/day, up to 0.5 Ton/day	0.35	ton	75	-	-		33	-	308.743 /ton	108
	4650	Structural concrete, placing, slab on grade, pumped, over 6" thick, includes leveling (strike off) & consolidation, excludes material	0.40	cy	15	-	-		2	-	41.48 /cy	17
	4650	Structural concrete, placing, slab on grade, pumped, over 6" thick, includes leveling (strike off) & consolidation, excludes material	4.00	cy	149	-	-		17	-	41.50 /cy	166

Central Kitsap Treatment Plant Solids Handling

Kitsap County

Detail Report with Contractor Markups

	Item	Description	Takeoff Qty		Labor Amount	Material Amount	Subcontract Amount	Subcontract Name	Equipment Amount	Other Amount	Total Unit Cost	Total Amount
03 11 13.305		*16" Elevated Slab*										
n	0725	Struct SLAB ON GRADE concrete,ready mix,normal wt,4500 psi,includes local aggregate,sand,portland cement and water,delivered, includes all additives	0.40	cy	-	158	-		-	-	395.55 /cy	158
n	0725	Struct SLAB ON GRADE concrete,ready mix,normal wt,4500 psi,includes local aggregate,sand,portland cement and water,delivered, includes all additives	4.00	CY	-	1,582	-		-	-	395.548 /CY	1,582
n	0255	Concrete finishing, floors, manual screed, bull float, machine float & steel trowel (walk-behind)_SOG	74.996	sf	117	-	-		6	-	1.641 /sf	123
n	0122	Control joint, concrete floor slab, sawcut in green concrete, 1" depth_SOG	3.75	lf	3	0	-		0	-	1.072 /lf	4
n	0215	Control joint, clean out control joint of debris_SOG	3.75	lf	1	-	-			-	0.15 /lf	1
n	0367	Control joint, joint sealant, polyurethane, 1/4" x 1/4" (308 LF/Gal)_SOG	7.50	lf	26	2	-		-	-	3.723 /lf	28
n	0310	Concrete surface treatment, curing, sprayed membrane compound_SOG	0.75	csf	13	10	-		-	-	29.853 /csf	22
	1200	Vapor retarders, building paper, polyethylene vapor barrier, standard, 10 mil (.010" thick)	0.75	sq	20	11	-		-	-	40.68 /sq	31
n	1310	Fill, gravel fill, compacted, under floor slabs, alternate pricing method, 12" deep_SOG	3.00	ecy	70	165	-		6	-	80.207 /ecy	241
n	1136	Hauling, excavated borrow material, loose cubic yards, 20 mile round trip, 0.4 loads/hour, 16.5 c.y. dump trailer, highway haulers, excludes loading	3.00	lcy	52	-	-		58	-	36.84 /lcy	111
		03 11 13.305 16" Elevated Slab			*1,651*	*2,901*			*134*		*1,171.558/CY*	*4,686*
		4.00 CY										
		13.457 Labor hours										
		2.041 Equipment hours										
		03 11 13.305.05 Elevated Vault Slab, 16" Thick x 75 SF			*1,651*	*2,901*	*0*		*134*	*0*	*1,171.558/CY*	*4,686*
		4.00 CY										
		13.457 Labor hours										
		2.041 Equipment hours										
03 11 13.305.10		*Elevated Slab, 16" Thick x 78 SF*										
03 11 13.305		*16" Elevated Slab*										
	3050	C.I.P. concrete forms, slab on grade, edge, wood, 7" to 12" high, 4 use, includes erecting, bracing, stripping and cleaning	47.092	sfca	408	99	-		-	-	10.767 /sfca	507
n	9015	C.I.P. concrete forms, bulkhead for slab on grade w/ keyway, up to 12", exp metal, includes erecting, bracing, stripping and cleaning	5.199	sfca	27	4	-		-	-	5.934 /sfca	31
n	2050	Reinforcing steel, unload and sort, add to base_SLAB ON GRADE	0.35	ton	26	-	-		11	-	108.03 /ton	38

Central Kitsap Treatment Plant Solids Handling

Kitsap County

Detail Report with Contractor Markups

	Item	Description	Takeoff Qty		Labor Amount	Material Amount	Subcontract Amount	Subcontract Name	Equipment Amount	Other Amount	Total Unit Cost	Total Amount
03 11 13.305		*16" Elevated Slab*										
	0600	Reinforcing steel, in place, slab on grade, #3 to #7, A615, grade 60, incl labor for accessories, excl material for accessories	0.35	ton	658	873	-		-	-	4,374.086 /ton	1,531
	2220	Reinforcing steel, crane cost for handling, 90 picks/day, up to 0.5 Ton/day	0.35	ton	75	-	-		33	-	308.686 /ton	108
	4650	Structural concrete, placing, slab on grade, pumped, over 6" thick, includes leveling (strike off) & consolidation, excludes material	0.40	cy	15	-	-		2	-	41.50 /cy	17
	4650	Structural concrete, placing, slab on grade, pumped, over 6" thick, includes leveling (strike off) & consolidation, excludes material	4.00	cy	149	-	-		17	-	41.50 /cy	166
n	0725	Struct SLAB ON GRADE concrete,ready mix,normal wt,4500 psi,includes local aggregate,sand,portland cement and water,delivered, includes all additives	4.00	CY	-	1,582	-		-	-	395.55 /CY	1,582
n	0725	Struct SLAB ON GRADE concrete,ready mix,normal wt,4500 psi,includes local aggregate,sand,portland cement and water,delivered, includes all additives	0.40	cy	-	158	-		-	-	395.55 /cy	158
n	0255	Concrete finishing, floors, manual screed, bull float, machine float & steel trowel (walk-behind)_SOG	78.004	sf	121	-	-		7	-	1.641 /sf	128
n	0122	Control joint, concrete floor slab, sawcut in green concrete, 1" depth_SOG	3.90	lf	4	0	-		0	-	1.079 /lf	4
n	0215	Control joint, clean out control joint of debris_SOG	3.90	lf	1	-	-			-	0.156 /lf	1
n	0367	Control joint, joint sealant, polyurethane, 1/4" x 1/4" (308 LF/Gal)_SOG	7.80	lf	27	2	-		-	-	3.723 /lf	29
n	0310	Concrete surface treatment, curing, sprayed membrane compound_SOG	0.78	csf	13	10	-		-	-	29.833 /csf	23
	1200	Vapor retarders, building paper, polyethylene vapor barrier, standard, 10 mil (.010" thick)	0.78	sq	21	11	-		-	-	40.72 /sq	32
n	1310	Fill, gravel fill, compacted, under floor slabs, alternate pricing method, 12" deep_SOG	3.00	ecy	70	165	-		6	-	80.197 /ecy	241
n	1136	Hauling, excavated borrow material, loose cubic yards, 20 mile round trip, 0.4 loads/hour, 16.5 c.y. dump trailer, highway haulers, excludes loading	3.00	lcy	52	-	-		58	-	36.847 /lcy	111
		03 11 13.305 16" Elevated Slab			*1,667*	*2,904*			*134*		*1,176.433/CY*	*4,706*
		4.00 CY										
		13.598 Labor hours										
		2.056 Equipment hours										
		03 11 13.305.10 Elevated Slab, 16" Thick x 78 SF			*1,667*	*2,904*	*0*		*134*	*0*	*1,176.433/CY*	*4,706*
		4.00 CY										
		13.598 Labor hours										
		2.056 Equipment hours										

03 11 13.503.05 *Vault Foundation Slab, 10" Thick x 75 SF*

AACE Classification Accuracy Range

Upper Range +50% **Lower Range -30%**

Central Kitsap Treatment Plant Solids Handling

Kitsap County

Detail Report with Contractor Markups

	Item	Description	Takeoff Qty		Labor Amount	Material Amount	Subcontract Amount	Subcontract Name	Equipment Amount	Other Amount	Total Unit Cost	Total Amount
03 11 13.503		*10" Slab on Grade*										
	3050	C.I.P. concrete forms, slab on grade, edge, wood, 7" to 12" high, 4 use, includes erecting, bracing, stripping and cleaning	28.855	sfca	250	61	-		-	-	10.767 /sfca	311
n	9015	C.I.P. concrete forms, bulkhead for slab on grade w/ keyway, up to 12", exp metal, includes erecting, bracing, stripping and cleaning	3.124	sfca	16	2	-		-	-	5.93 /sfca	19
n	2050	Reinforcing steel, unload and sort, add to base_SLAB ON GRADE	0.263	ton	20	-	-		9	-	108.175 /ton	28
	0600	Reinforcing steel, in place, slab on grade, #3 to #7, A615, grade 60, incl labor for accessories, excl material for accessories	0.263	ton	495	656	-		-	-	4,374.140 /ton	1,150
	2220	Reinforcing steel, crane cost for handling, 90 picks/day, up to 0.5 Ton/day	0.263	ton	57	-	-		25	-	308.67 /ton	81
	4650	Structural concrete, placing, slab on grade, pumped, over 6" thick, includes leveling (strike off) & consolidation, excludes material	0.30	cy	11	-	-		1	-	41.50 /cy	12
	4650	Structural concrete, placing, slab on grade, pumped, over 6" thick, includes leveling (strike off) & consolidation, excludes material	3.00	cy	112	-	-		13	-	41.503 /cy	125
n	0725	Struct SLAB ON GRADE concrete,ready mix,normal wt,4500 psi,includes local aggregate,sand,portland cement and water,delivered, includes all additives	0.30	cy	-	119	-		-	-	395.50 /cy	119
n	0725	Struct SLAB ON GRADE concrete,ready mix,normal wt,4500 psi,includes local aggregate,sand,portland cement and water,delivered, includes all additives	3.00	CY	-	1,187	-		-	-	395.55 /CY	1,187
n	0255	Concrete finishing, floors, manual screed, bull float, machine float & steel trowel (walk-behind)_SOG	74.996	sf	117	-	-		6	-	1.641 /sf	123
n	0122	Control joint, concrete floor slab, sawcut in green concrete, 1" depth_SOG	3.75	lf	4	0	-		0	-	1.075 /lf	4
n	0215	Control joint, clean out control joint of debris_SOG	3.75	lf	1	-	-			-	0.152 /lf	1
n	0367	Control joint, joint sealant, polyurethane, 1/4" x 1/4" (308 LF/Gal)_SOG	7.50	lf	26	2	-		-	-	3.723 /lf	28
n	0310	Concrete surface treatment, curing, sprayed membrane compound_SOG	0.75	csf	13	10	-		-	-	29.85 /csf	22
	1200	Vapor retarders, building paper, polyethylene vapor barrier, standard, 10 mil (.010" thick)	0.75	sq	20	11	-		-	-	40.693 /sq	31
n	1310	Fill, gravel fill, compacted, under floor slabs, alternate pricing method, 12" deep_SOG	3.00	ecy	70	165	-		6	-	80.203 /ecy	241
n	1136	Hauling, excavated borrow material, loose cubic yards, 20 mile round trip, 0.4 loads/hour, 16.5 c.y. dump trailer, highway haulers, excludes loading	3.00	lcy	52	-	-		58	-	36.837 /lcy	111
		03 11 13.503 10" Slab on Grade			*1,262*	*2,212*			*118*		*1,197.04 /CY*	*3,591*

3.00 CY

10.322 Labor hours
1.872 Equipment hours

AACE Classification Accuracy Range

Upper Range +50% **Lower Range -30%**

Central Kitsap Treatment Plant Solids Handling

Kitsap County

Detail Report with Contractor Markups

Item	Description	Takeoff Qty		Labor Amount	Material Amount	Subcontract Amount	Name	Equipment Amount	Other Amount	Total Unit Cost	Total Amount
	03 11 13.503.05 Vault Foundation Slab, 10" Thick x 75 SF			*1,262*	*2,212*	*0*		*118*	*0*	*1,197.04 /CY*	*3,591*
	3.00 CY										
	10.322 Labor hours										
	1.872 Equipment hours										
03 11 13.505.15	*Foundation Slab, 16" Thick x 79 SF*										
03 11 13.505	*16" Slab on Grade*										
3050	C.I.P. concrete forms, slab on grade, edge, wood, 7" to 12" high, 4 use, includes erecting, bracing, stripping and cleaning	47.391	sfca	411	99	-		-	-	10.767 /sfca	510
n 9015	C.I.P. concrete forms, bulkhead for slab on grade w/ keyway, up to 12", exp metal, includes erecting, bracing, stripping and cleaning	5.265	sfca	27	4	-		-	-	5.939 /sfca	31
n 2050	Reinforcing steel, unload and sort, add to base_SLAB ON GRADE	0.35	ton	26	-	-		11	-	108.06 /ton	38
0600	Reinforcing steel, in place, slab on grade, #3 to #7, A615, grade 60, incl labor for accessories, excl material for accessories	0.35	ton	658	873	-		-	-	4,373.940 /ton	1,531
2220	Reinforcing steel, crane cost for handling, 90 picks/day, up to 0.5 Ton/day	0.35	ton	75	-	-		33	-	308.771 /ton	108
4650	Structural concrete, placing, slab on grade, pumped, over 6" thick, includes leveling (strike off) & consolidation, excludes material	0.40	cy	15	-	-		2	-	41.50 /cy	17
4650	Structural concrete, placing, slab on grade, pumped, over 6" thick, includes leveling (strike off) & consolidation, excludes material	4.00	cy	149	-	-		17	-	41.50 /cy	166
n 0725	Struct SLAB ON GRADE concrete,ready mix,normal wt,4500 psi,includes local aggregate,sand,portland cement and water,delivered, includes all additives	4.00	CY	-	1,582	-		-	-	395.548 /CY	1,582
n 0725	Struct SLAB ON GRADE concrete,ready mix,normal wt,4500 psi,includes local aggregate,sand,portland cement and water,delivered, includes all additives	0.40	cy	-	158	-		-	-	395.575 /cy	158
n 0255	Concrete finishing, floors, manual screed, bull float, machine float & steel trowel (walk-behind)_SOG	78.997	sf	123	-	-		7	-	1.641 /sf	130
n 0122	Control joint, concrete floor slab, sawcut in green concrete, 1" depth_SOG	3.95	lf	4	0	-		0	-	1.081 /lf	4
n 0215	Control joint, clean out control joint of debris_SOG	3.95	lf	1	-	-			-	0.157 /lf	1
n 0367	Control joint, joint sealant, polyurethane, 1/4" x 1/4" (308 LF/Gal)_SOG	7.90	lf	27	2	-		-	-	3.719 /lf	29
n 0310	Concrete surface treatment, curing, sprayed membrane compound_SOG	0.79	csf	13	10	-		-	-	29.84 /csf	24
1200	Vapor retarders, building paper, polyethylene vapor barrier, standard, 10 mil (.010" thick)	0.79	sq	21	11	-		-	-	40.72 /sq	32
n 1310	Fill, gravel fill, compacted, under floor slabs, alternate pricing method, 12" deep_SOG	3.00	ecy	70	165	-		6	-	80.21 /ecy	241

Central Kitsap Treatment Plant Solids Handling

Kitsap County

Detail Report with Contractor Markups

	Item	Description	Takeoff Qty		Labor Amount	Material Amount	Subcontract Amount	Subcontract Name	Equipment Amount	Other Amount	Total Unit Cost	Total Amount
03 11 13.505		*16" Slab on Grade*										
n	1136	Hauling, excavated borrow material, loose cubic yards, 20 mile round trip, 0.4 loads/hour, 16.5 c.y. dump trailer, highway haulers, excludes loading	3.00	lcy	52	-	-		58	-	36.843 /lcy	111
		03 11 13.505 16" Slab on Grade			*1,673*	*2,905*			*134*		*1,178.033/CY*	*4,712*
		4.00 CY										
		13.644 Labor hours										
		2.061 Equipment hours										
		03 11 13.505.15 Foundation Slab, 16" Thick x 79 SF			*1,673*	*2,905*	*0*		*134*	*0*	*1,178.033/CY*	*4,712*
		4.00 CY										
		13.644 Labor hours										
		2.061 Equipment hours										
03 11 13.801.05		*Concrete Wall, 14'-5" High x 8" Wide x 27 LF*										
03 11 13.801		*08" CIP Wall*										
	0500	C.I.P. concrete forms, wall, wood bulkhead with 2 piece keyway, 1 use, includes erecting, bracing, stripping and cleaning	20.00	lf	438	117	-		-	-	27.767 /lf	555
	2550	C.I.P. concrete forms, wall, job built, plywood, over 8' to 16' high, 4 use, includes erecting, bracing, stripping and cleaning	778.518	sfca	11,449	1,325	-		-	-	16.408 /sfca	12,774
	5200	Chamfer strip, wood, 3/4" wide	39.00	lf	73	9	-		-	-	2.123 /lf	83
	1400	Tie cones, plastic, for coil tie system, for CIP wall forms, 1/2" bolt diameter x 1" setback length, includes material only	1.00	c	-	112	-		-	-	111.77 /c	112
n	3010	Waterstop, rubber, center bulb, 1/4" thick x 6" wide_WALLS	47.00	lf	320	606	-		-	-	19.708 /lf	926
	0100	Splice rebar, standard, self-aligning type, taper threaded, #4 bars, includes holding rebar in place while splicing	11.00	ea	201	242	-		-	-	40.247 /ea	443
n	2020	Reinforcing steel, unload and sort, add to base_WALLS	1.00	ton	75	-	-		33	-	108.04 /ton	108
n	2214	Reinforcing steel, crane cost for handling, average, add_WALLS	1.00	ton	82	-	-		36	-	117.47 /ton	117
	0700	Reinforcing steel, in place, walls, #3 to #7, A615, grade 60, incl labor for accessories, excl material for accessories	1.00	ton	1,442	2,494	-		-	-	3,935.28 /ton	3,935
	5100	Structural concrete, placing, walls, pumped, 12" thick, includes leveling (strike off) & consolidation, excludes material	1.00	cy	63	-	-		7	-	69.77 /cy	70
	5100	Structural concrete, placing, walls, pumped, 12" thick, includes leveling (strike off) & consolidation, excludes material	10.00	cy	628	-	-		70	-	69.799 /cy	698
n	0525	Struct WALLS concrete,ready mix,normal wt,4500 psi,includes local aggregate,sand,portland cement and water,delivered, includes all additives	1.00	cy	-	396	-		-	-	395.55 /cy	396

Central Kitsap Treatment Plant Solids Handling

Kitsap County

Detail Report with Contractor Markups

	Item	Description	Takeoff Qty		Labor Amount	Material Amount	Subcontract Amount	Subcontract Name	Equipment Amount	Other Amount	Total Unit Cost	Total Amount
03 11 13.801		*08" CIP Wall*										
n	0525	Struct WALLS concrete,ready mix,normal wt,4500 psi,includes local aggregate,sand,portland cement and water,delivered, includes all additives	10.00	CY	-	3,956	-		-	-	395.552 /CY	3,956
n	0210	Control joint, clean out control joint of debris_WALLS	20.00	lf	3	-	-			-	0.154 /lf	3
n	0366	Control joint, joint sealant, polyurethane, 1/4" x 1/4" (308 LF/Gal)_WALLS	20.00	lf	69	6	-		-	-	3.722 /lf	74
	0020	Concrete finishing, walls, includes breaking ties and patching voids	778.518	sf	1,342	54	-		-	-	1.792 /sf	1,395
	0050	Concrete finishing, walls, burlap rub with grout, includes breaking ties and patching voids	389.259	sf	805	27	-		-	-	2.137 /sf	832
		03 11 13.801 08" CIP Wall			*16,989*	*9,343*			*146*		*2,647.747/CY*	*26,477*
		10.00 CY										
		140.576 Labor hours										
		2.567 Equipment hours										
		03 11 13.801.05 Concrete Wall, 14'-5" High x 8" Wide x 27 LF			*16,989*	*9,343*	*0*		*146*	*0*	*2,647.747/CY*	*26,477*
		10.00 CY										
		140.576 Labor hours										
		2.567 Equipment hours										
03 11 13.803.15		*Vault Concrete Wall, 8' High x 10 Thick x 31 LF*										
03 11 13.803		*10" CIP Wall*										
	0500	C.I.P. concrete forms, wall, wood bulkhead with 2 piece keyway, 1 use, includes erecting, bracing, stripping and cleaning	13.00	lf	285	76	-		-	-	27.766 /lf	361
	2550	C.I.P. concrete forms, wall, job built, plywood, over 8' to 16' high, 4 use, includes erecting, bracing, stripping and cleaning	496.00	sfca	7,294	844	-		-	-	16.408 /sfca	8,139
	5200	Chamfer strip, wood, 3/4" wide	25.00	lf	47	6	-		-	-	2.121 /lf	53
	1400	Tie cones, plastic, for coil tie system, for CIP wall forms, 1/2" bolt diameter x 1" setback length, includes material only	1.00	c	-	112	-		-	-	111.80 /c	112
n	3010	Waterstop, rubber, center bulb, 1/4" thick x 6" wide_WALLS	44.00	lf	300	568	-		-	-	19.708 /lf	867
	0100	Splice rebar, standard, self-aligning type, taper threaded, #4 bars, includes holding rebar in place while splicing	8.80	ea	160	194	-		-	-	40.245 /ea	354
n	2020	Reinforcing steel, unload and sort, add to base_WALLS	0.80	ton	60	-	-		26	-	108.025 /ton	86
n	2214	Reinforcing steel, crane cost for handling, average, add_WALLS	0.80	ton	66	-	-		28	-	117.488 /ton	94
	0700	Reinforcing steel, in place, walls, #3 to #7, A615, grade 60, incl labor for accessories, excl material for accessories	0.80	ton	1,153	1,995	-		-	-	3,935.288 /ton	3,148

Central Kitsap Treatment Plant Solids Handling

Kitsap County

Detail Report with Contractor Markups

	Item	Description	Takeoff Qty		Labor Amount	Material Amount	Subcontract Amount	Subcontract Name	Equipment Amount	Other Amount	Total Unit Cost	Total Amount
03 11 13.803		*10" CIP Wall*										
	5100	Structural concrete, placing, walls, pumped, 12" thick, includes leveling (strike off) & consolidation, excludes material	0.80	cy	50	-	-		6	-	69.80 /cy	56
	5100	Structural concrete, placing, walls, pumped, 12" thick, includes leveling (strike off) & consolidation, excludes material	8.00	cy	502	-	-		56	-	69.798 /cy	558
n	0525	Struct WALLS concrete,ready mix,normal wt,4500 psi,includes local aggregate,sand,portland cement and water,delivered, includes all additives	0.80	cy	-	316	-		-	-	395.563 /cy	316
n	0525	Struct WALLS concrete,ready mix,normal wt,4500 psi,includes local aggregate,sand,portland cement and water,delivered, includes all additives	8.00	CY	-	3,164	-		-	-	395.553 /CY	3,164
n	0210	Control joint, clean out control joint of debris_WALLS	13.00	lf	2	-	-			-	0.155 /lf	2
n	0366	Control joint, joint sealant, polyurethane, 1/4" x 1/4" (308 LF/Gal)_WALLS	13.00	lf	45	4	-		-	-	3.722 /lf	48
	0020	Concrete finishing, walls, includes breaking ties and patching voids	496.00	sf	855	34	-		-	-	1.792 /sf	889
	0050	Concrete finishing, walls, burlap rub with grout, includes breaking ties and patching voids	248.00	sf	513	17	-		-	-	2.137 /sf	530
		03 11 13.803 10" CIP Wall			*11,332*	*7,330*			*117*		*2,347.345/CY*	*18,779*
		8.00 CY										
		93.666 Labor hours										
		2.054 Equipment hours										
		03 11 13.803.15 Vault Concrete Wall, 8' High x 10 Thick x 31 LF			*11,332*	*7,330*	*0*		*117*	*0*	*2,347.345/CY*	*18,779*
		8.00 CY										
		93.666 Labor hours										
		2.054 Equipment hours										
		DIVISION 03 CONCRETE			**34,574**	**27,596**	**0**		**782**	**0**	**1,907.619/CY**	**62,951**
		33.00 CY										
		285.263 Labor hours										
		12.650 Equipment hours										

DIVISION 08 OPENINGS

08 31 00.005.05 *Access Hatch 3' x 3'*

08 31 00.005		*Access Door - Single Leaf - 3' x 3'*										
	0050	Doors, specialty, access, floor, industrial, steel, 300 psf L.L., single leaf, 3' x 3', 300 lb	1.00	EA	440	2,758	-		-	-	3,197.81 /EA	3,198

AACE Classification Accuracy Range

Upper Range +50% **Lower Range -30%**

Central Kitsap Treatment Plant Solids Handling

Kitsap County

Detail Report with Contractor Markups

Item		Description	Takeoff Qty		Labor Amount	Material Amount	Subcontract Amount	Subcontract Name	Equipment Amount	Other Amount	Total Unit Cost	Total Amount
		08 31 00.005 Access Door - Single Leaf - 3' x 3'			*440*	*2,758*					*3,197.81 /EA*	*3,198*
		1.00 EA										
		2.909 Labor hours										
		08 31 00.005.05 Access Hatch 3' x 3'			*440*	*2,758*	*0*		*0*	*0*	*3,197.81 /EA*	*3,198*
		1.00 EA										
		2.909 Labor hours										
08 31 00.015.05		*Access Hatch 5' x 5'*										
08 31 00.015		*Access Door - Single Leaf - 5' x 5'*										
	0350	Doors, specialty, access, floor, industrial, steel, 300 psf L.L., double leaf, 5' x 5', 645 lb	1.00	EA	538	6,205	-		-	-	6,742.73 /EA	6,743
		08 31 00.015 Access Door - Single Leaf - 5' x 5'			*538*	*6,205*					*6,742.73 /EA*	*6,743*
		1.00 EA										
		3.556 Labor hours										
		08 31 00.015.05 Access Hatch 5' x 5'			*538*	*6,205*	*0*		*0*	*0*	*6,742.73 /EA*	*6,743*
		1.00 EA										
		3.556 Labor hours										
		DIVISION 08 OPENINGS			**978**	**8,963**	**0**		**0**	**0**	**4,970.270/EA**	**9,941**
		2.00 EA										
		6.465 Labor hours										
DIVISION 31		**EARTHWORK**										
31.23.10.P005		*Excavation, Backfill, and Haul Off-Site*										
31 23 10.000		*Excavation, Backfill, and Haul Off-Site*										
n	6260	Strt excvt for minor strtr,bank measr,for sprd and mat ftngs,elvtr pits,and small bldng fndtn,sandy clay loam,2 cy bucket,machin excvtn,hydrlc backhoe	500.00	CY	4,649	-	-		3,912	-	17.121 /CY	8,560
	4010	Backfill, structural, sandy clay & loam, 200 H.P. dozer, 50' haul, from existing stockpile, excludes compaction	335.00	CY	211	-	-		368	-	1.726 /CY	578
	4060	Borrow, common earth, 1-1/2 C.Y. bucket, loading and/or spreading, front end loader, wheel-mounted	335.00	CY	529	4,877	-		260	-	16.912 /CY	5,666
n	0560	Hauling,excavated borrow material,loose cubic yards,20 mile round trip,0.4 load/hr,base wide rate,12 cy truck,highway haulers,excludes loading	185.00	CY	4,659	-	-		4,828	-	51.279 /CY	9,487
	0400	Compaction, structural, select fill, 8" lifts, sheepsfoot or wobbly wheel roller	335.00	CY	342	-	-		535	-	2.617 /CY	877

Central Kitsap Treatment Plant Solids Handling

Kitsap County

Detail Report with Contractor Markups

Item		Description	Takeoff Qty		Labor Amount	Material Amount	Subcontract Amount	Subcontract Name	Equipment Amount	Other Amount	Total Unit Cost	Total Amount
		31 23 10.000 Excavation, Backfill, and Haul Off-Site			*10,389*	*4,877*			*9,902*		*14.892/CY*	*25,168*
		1,690.00 CY										
		83.461 Labor hours										
		62.118 Equipment hours										
		31.23.10.P005 Excavation, Backfill, and Haul Off-Site			*10,389*	*4,877*	*0*		*9,902*	*0*	*14.892/CY*	*25,168*
		1,690.00 CY										
		83.461 Labor hours										
		62.118 Equipment hours										
31.23.19.P005		*Well Point Detwatering - 2 Months*										
31 23 19.020		*Dewatering - Wellpoint*										
n	1000	Wellpoints,complete installation,2"wellpoints,5'oc, 200'long header,8"diameter,includes one month operation,equipment rental,fuel and removal system	100.00	hdr	70,169	26,751	-		-	-	969.195 /hdr	96,919
	1100	Wellpoints, each additional month, 2" wellpoints, 5' O.C., 200' long header, 8" diameter, includes operation, equipment rental, and fuel	100.00	hdr	50,180	12,557	-		-	-	627.367 /hdr	62,737
		31 23 19.020 Dewatering - Wellpoint			*120,349*	*39,307*					*79,828.11 /MO*	*159,656*
		2.00 MO										
		914.740 Labor hours										
		31.23.19.P005 Well Point Detwatering - 2 Months			*120,349*	*39,307*	*0*		*0*	*0*	*79,828.11 /MO*	*159,656*
		2.00 MO										
		914.740 Labor hours										
		DIVISION 31 EARTHWORK			**130,738**	**44,184**	**0**		**9,902**	**0**	**109.363/CY**	**184,824**
		1,690.00 CY										
		998.201 Labor hours										
		62.118 Equipment hours										
DIVISION 33		**UTILITIES (BURIED PIPE AND VALVES)**										
33.32.13.005		*Plant wastewater - in plant pumps*										
33 32 13.000		*Package Sewage Pumping Station*										
	2510	Packaged utility lift station, packaged sewage lift station, 500,000 GPD, excludes fencing or external piping	1.00	EA	96,501	468,595	-		26,693	-	591,788.59 /EA	591,789
	2510	Pump Station - Valve vault w/ access hatch	1.00	EA	8,180	29,117	-		3,196	-	40,492.870 /EA	40,493

Central Kitsap Treatment Plant Solids Handling

Kitsap County

Detail Report with Contractor Markups

Item	Description	Takeoff Qty		Labor Amount	Material Amount	Subcontract Amount	Subcontract Name	Equipment Amount	Other Amount	Total Unit Cost	Total Amount
	33 32 13.000 Package Sewage Pumping Station			*104,681*	*497,711*			*29,889*		*316,140.73 /EA*	*632,281*
	2.00 EA										
	742.211 Labor hours										
	321.158 Equipment hours										
	33.32.13.005 Plant wastewater - in plant pumps			*104,681*	*497,711*	*0*		*29,889*	*0*	*316,140.73 /EA*	*632,281*
	2.00 EA										
	742.211 Labor hours										
	321.158 Equipment hours										
	DIVISION 33 UTILITIES (BURIED PIPE AND VALVES)			**104,681**	**497,711**	**0**		**29,889**	**0**	**31,614.073/LF**	**632,281**
	20.00 LF										
	742.211 Labor hours										
	321.158 Equipment hours										
DIVISION 43	**PROCESS GAS & LIQUID HANDLING, PURIFICATION & STORAGE EQUIPMENT**										
32.24.11.P005	*In-Plant Pump Station - Subermible Pumps - 10 HP*										
43 24 11.000	*Pumping Equipment - Submersible Pump*										
9000	Submersible Pump_10 HP	2.00	EA	5,953	120,385	-		1,704	625	64,333.545 /EA	128,667
9950	Stainless Steel Guide Rails	30.00	LF	2,278	619	-				96.566 /LF	2,897
9999	Vendor Testing and Startup	2.00	day	152		7,064				3,607.97 /day	7,216
	43 24 11.000 Pumping Equipment - Submersible Pump			*8,383*	*121,004*	*7,064*		*1,704*	*625*	*69,390.010/EA*	*138,780*
	2.00 EA										
	66.00 Labor hours										
	12.00 Equipment hours										
	32.24.11.P005 In-Plant Pump Station - Subermible Pumps - 10 HP			*8,383*	*121,004*	*7,064*		*1,704*	*625*	*69,390.010/EA*	*138,780*
	2.00 EA										
	66.00 Labor hours										
	12.00 Equipment hours										
	DIVISION 43 PROCESS GAS & LIQUID HANDLING, PURIFICATION & STORAGE EQUIPMENT			**8,383**	**121,004**	**7,064**		**1,704**	**625**	**69,390.010/EA**	**138,780**
	2.00 EA										
	66.00 Labor hours										
	12.00 Equipment hours										

AACE Classification Accuracy Range

Upper Range +50% **Lower Range -30%**

Central Kitsap Treatment Plant Solids Handling

Kitsap County

Detail Report with Contractor Markups

Item	Description	Takeoff Qty		Labor Amount	Material Amount	Subcontract Amount	Name	Equipment Amount	Other Amount	Total Unit Cost	Total Amount
	411 IN-PLANT PUMP STATION			***279,354***	***699,458***	***7,064***		***42,277***	***625***	***1,028,777.31 /LS***	***1,028,777***
	1.00 LS										
	2,098.139 Labor hours										
	407.926 Equipment hours										
	466 O&M BUILDING										
DIVISION 03	**CONCRETE**										
03 41 33.000.05	*Double Tee Roof, 21,040 SF*										
03 41 33.000	*Precast and Prestressed Concrete*										
0300	Precast tees, double, floor, 30' span, prestressed	21,040.00	SF	42,467	515,626	-		16,610	-	27.315 /SF	574,703
	03 41 33.000 Precast and Prestressed Concrete			*42,467*	*515,626*			*16,610*		*27.315/SF*	*574,703*
	21,040.00 SF										
	315.600 Labor hours										
	35.067 Equipment hours										
	03 41 33.000.05 Double Tee Roof, 21,040 SF			*42,467*	*515,626*	*0*		*16,610*	*0*	*27.315/SF*	*574,703*
	21,040.00 SF										
	315.600 Labor hours										
	35.067 Equipment hours										
03.11.13.P005	*O & M Building Base Slab - 12" Thick - 21,040 SF*										
03 11 13.504	*12" Slab on Grade*										
3050	C.I.P. concrete forms, slab on grade, edge, wood, 7" to 12" high, 4 use, includes erecting, bracing, stripping and cleaning	580.200	sfca	5,030	1,217	-		-	-	10.767 /sfca	6,247
n 9015	C.I.P. concrete forms, bulkhead for slab on grade w/ keyway, up to 12", exp metal, includes erecting, bracing, stripping and cleaning	1,051.975	sfca	5,432	814	-		-	-	5.938 /sfca	6,246
n 2050	Reinforcing steel, unload and sort, add to base_SLAB ON GRADE	68.25	ton	5,140	-	-		2,235	-	108.051 /ton	7,374
0600	Reinforcing steel, in place, slab on grade, #3 to #7, A615, grade 60, incl labor for accessories, excl material for accessories	68.25	ton	128,333	170,194	-		-	-	4,374.033 /ton	298,528
2220	Reinforcing steel, crane cost for handling, 90 picks/day, up to 0.5 Ton/day	68.25	ton	14,685	-	-		6,385	-	308.718 /ton	21,070
4650	Structural concrete, placing, slab on grade, pumped, over 6" thick, includes leveling (strike off) & consolidation, excludes material	780.00	cy	29,104	-	-		3,267	-	41.502 /cy	32,371
4650	Structural concrete, placing, slab on grade, pumped, over 6" thick, includes leveling (strike off) & consolidation, excludes material	78.00	cy	2,910	-	-		327	-	41.502 /cy	3,237

Central Kitsap Treatment Plant Solids Handling

Kitsap County

Detail Report with Contractor Markups

	Item	Description	Takeoff Qty		Labor Amount	Material Amount	Subcontract Amount	Subcontract Name	Equipment Amount	Other Amount	Total Unit Cost	Total Amount
03 11 13.504		*12" Slab on Grade*										
n	0725	Struct SLAB ON GRADE concrete,ready mix,normal wt,4500 psi,includes local aggregate,sand,portland cement and water,delivered, includes all additives	78.00	cy	-	30,853	-		-	-	395.551 /cy	30,853
n	0725	Struct SLAB ON GRADE concrete,ready mix,normal wt,4500 psi,includes local aggregate,sand,portland cement and water,delivered, includes all additives	780.00	CY	-	308,530	-		-	-	395.551 /CY	308,530
n	0255	Concrete finishing, floors, manual screed, bull float, machine float & steel trowel (walk-behind)_SOG	21,040.00	BSF	32,746	-	-		1,781	-	1.641 /BSF	34,527
n	0122	Control joint, concrete floor slab, sawcut in green concrete, 1" depth_SOG	1,051.975	lf	979	54	-		98	-	1.075 /lf	1,131
n	0215	Control joint, clean out control joint of debris_SOG	1,051.975	lf	163	-	-			-	0.155 /lf	163
n	0367	Control joint, joint sealant, polyurethane, 1/4" x 1/4" (308 LF/Gal)_SOG	2,103.950	lf	7,253	579	-		-	-	3.722 /lf	7,831
n	0310	Concrete surface treatment, curing, sprayed membrane compound_SOG	210.395	csf	3,581	2,696	-		-	-	29.835 /csf	6,277
	1200	Vapor retarders, building paper, polyethylene vapor barrier, standard, 10 mil (.010" thick)	210.395	sq	5,615	2,949	-		-	-	40.704 /sq	8,564
n	1310	Fill, gravel fill, compacted, under floor slabs, alternate pricing method, 12" deep_SOG	896.00	ecy	20,814	49,310	-		1,739	-	80.204 /ecy	71,863
n	1136	Hauling, excavated borrow material, loose cubic yards, 20 mile round trip, 0.4 loads/hour, 16.5 c.y. dump trailer, highway haulers, excludes loading	896.00	lcy	15,561	-	-		17,456	-	36.849 /lcy	33,017
		03 11 13.504 12" Slab on Grade			*277,346*	*567,196*			*33,288*		*1,125.423/CY*	*877,830*
		780.00 CY										
		2,258.247 Labor hours 532.686 Equipment hours										
		03.11.13.P005 O & M Building Base Slab - 12" Thick - 21,040 SF			*277,346*	*567,196*	*0*		*33,288*	*0*	*1,125.423/CY*	*877,830*
		780.00 CY										
		2,258.247 Labor hours 532.686 Equipment hours										
		DIVISION 03 CONCRETE			**319,813**	**1,082,822**	**0**		**49,898**	**0**	**1,862.222/CY**	**1,452,533**
		780.00 CY										
		2,573.847 Labor hours 567.753 Equipment hours										

DIVISION 04 MASONRY

04.22.00.P005 *O & M Building - Split Face CMU - 18' High x 720' - Exterior Walls*

04 22 00.212 *Concrete Masonry Unit (12" CMU) - Exterior*

AACE Classification Accuracy Range

Upper Range +50% **Lower Range -30%**

Central Kitsap Treatment Plant Solids Handling

Kitsap County

Detail Report with Contractor Markups

Item		Description	Takeoff Qty		Labor Amount	Material Amount	Subcontract Amount	Subcontract Name	Equipment Amount	Other Amount	Total Unit Cost	Total Amount
04 22 00.212		*Concrete Masonry Unit (12" CMU) - Exterior*										
	0090	Scaffolding, steel tubular, regular, labor only to erect & dismantle, building exterior, wall face, 6'-4" x 5' frames, 1 to 5 stories, excludes planks	130.00	csf	53,851	-	-		-	-	414.238 /csf	53,851
	0906	Scaffolding, steel tubular, regular, rent/month only for complete system for face of walls, 6' -4" x 5' frames, excludes planks	130.00	csf	-	21,254	-		-	-	163.492 /csf	21,254
	2850	Scaffolding, steel tubular, regular, accessory, plank, rent/mo, 2" x 10" x 16' long	15.00	ea	-	297	-		-	-	19.796 /ea	297
	0060	Grout, bond beams and lintels, 8" deep, 12" thick, 0.30 CF per LF, pumped, excludes blockwork	720.00	lf	2,765	2,255	-		253	-	7.323 /lf	5,273
	0350	Grout, concrete masonry unit (CMU) cores, 12" thick, 0.422 CF/SF, pumped, excludes blockwork	12,960.00	sf	80,881	57,184	-		7,388	-	11.223 /sf	145,452
	0020	Masonry reinforcing bars, #5 and #6 reinforcing steel bars, placed horizontally, ASTM A615	2,379.168	lb	3,227	3,421	-		-	-	2.794 /lb	6,648
	0060	Masonry reinforcing bars, #5 and #6 reinforcing steel bars, placed vertically, ASTM A615	16,059.384	lb	26,809	23,092	-		-	-	3.107 /lb	49,902
n	0150	Concrete block,bond beam,normal weight,2000 psi,12"x8"x16",includes mortar,excludes scaffolding,horizontal reinforcing,vertical reinforcing and grout	720.00	lf	8,375	8,651	-		-	-	23.648 /lf	17,027
	6250	Concrete block, decorative, split face or scored split face, 2000 psi, 12" x 8" x 16", excludes scaffolding, grout and reinforcing	1,296.00	sf	28,476	16,466	-		-	-	34.678 /sf	44,942
	6250	Concrete block, decorative, split face or scored split face, 2000 psi, 12" x 8" x 16", excludes scaffolding, grout and reinforcing	12,960.00	SF	284,764	164,658	-		-	-	34.678 /SF	449,422
	6550	Concrete block, decorative, split face or scored split face, 12" thick, for special deeper colors, add	12,960.00	sf	-	22,210	-		-	-	1.714 /sf	22,210
	6550	Concrete block, decorative, split face or scored split face, 12" thick, for special deeper colors, add	1,296.00	sf	-	2,221	-		-	-	1.714 /sf	2,221
		04 22 00.212 Concrete Masonry Unit (12" CMU) - Exterior			*489,149*	*321,710*			*7,640*		*63.156/SF*	*818,499*
		12,960.00 SF										
		3,883.765 Labor hours										
		167.538 Equipment hours										
		04.22.00.P005 O & M Building - Split Face CMU - 18' High x 720' - Exterior Walls			*489,149*	*321,710*	*0*		*7,640*	*0*	*63.156/SF*	*818,499*
		12,960.00 SF										
		3,883.765 Labor hours										
		167.538 Equipment hours										
04.22.00.P010		*O & M Building - Split Face CMU - 26' High x 391' LF - Shop Area*										
04 22 00.212		*Concrete Masonry Unit (12" CMU) - Exterior*										
	0090	Scaffolding, steel tubular, regular, labor only to erect & dismantle, building exterior, wall face, 6'-4" x 5' frames, 1 to 5 stories, excludes planks	102.00	csf	42,252	-	-		-	-	414.238 /csf	42,252

AACE Classification Accuracy Range

Upper Range +50% **Lower Range -30%**

Central Kitsap Treatment Plant Solids Handling

Kitsap County

Detail Report with Contractor Markups

Item		Description	Takeoff Qty		Labor Amount	Material Amount	Subcontract Amount	Subcontract Name	Equipment Amount	Other Amount	Total Unit Cost	Total Amount
04 22 00.212		*Concrete Masonry Unit (12" CMU) - Exterior*										
	0906	Scaffolding, steel tubular, regular, rent/month only for complete system for face of walls, 6' -4" x 5' frames, excludes planks	102.00	csf	-	16,676	-		-	-	163.492 /csf	16,676
	2850	Scaffolding, steel tubular, regular, accessory, plank, rent/mo, 2" x 10" x 16' long	15.00	ea	-	297	-		-	-	19.796 /ea	297
	0060	Grout, bond beams and lintels, 8" deep, 12" thick, 0.30 CF per LF, pumped, excludes blockwork	391.00	lf	1,502	1,225	-		137	-	7.323 /lf	2,863
	0350	Grout, concrete masonry unit (CMU) cores, 12" thick, 0.422 CF/SF, pumped, excludes blockwork	10,166.00	sf	63,444	44,856	-		5,795	-	11.223 /sf	114,095
	0020	Masonry reinforcing bars, #5 and #6 reinforcing steel bars, placed horizontally, ASTM A615	1,292.02	lb	1,752	1,858	-		-	-	2.794 /lb	3,610
	0060	Masonry reinforcing bars, #5 and #6 reinforcing steel bars, placed vertically, ASTM A615	12,597.199	lb	21,030	18,114	-		-	-	3.107 /lb	39,144
n	0150	Concrete block,bond beam,normal weight,2000 psi,12"x8"x16",includes mortar,excludes scaffolding,horizontal reinforcing,vertical reinforcing and grout	391.00	lf	4,548	4,698	-		-	-	23.648 /lf	9,246
	6250	Concrete block, decorative, split face or scored split face, 2000 psi, 12" x 8" x 16", excludes scaffolding, grout and reinforcing	10,166.00	SF	223,373	129,160	-		-	-	34.678 /SF	352,533
	6250	Concrete block, decorative, split face or scored split face, 2000 psi, 12" x 8" x 16", excludes scaffolding, grout and reinforcing	1,017.00	sf	22,346	12,921	-		-	-	34.678 /sf	35,267
	6550	Concrete block, decorative, split face or scored split face, 12" thick, for special deeper colors, add	10,166.00	sf	-	17,422	-		-	-	1.714 /sf	17,422
	6550	Concrete block, decorative, split face or scored split face, 12" thick, for special deeper colors, add	1,017.00	sf	-	1,743	-		-	-	1.714 /sf	1,743
		04 22 00.212 Concrete Masonry Unit (12" CMU) - Exterior			*380,247*	*248,969*			*5,932*		*62.478/SF*	*635,149*
		10,166.00 SF										
		3,019.183 Labor hours										
		130.083 Equipment hours										
		04.22.00.P010 O & M Building - Split Face CMU - 26' High x 391' LF - Shop Area			*380,247*	*248,969*	*0*		*5,932*	*0*	*62.478/SF*	*635,149*
		10,166.00 SF										
		3,019.183 Labor hours										
		130.083 Equipment hours										
		DIVISION 04 MASONRY			**869,396**	**570,679**	**0**		**13,573**	**0**		**1,453,647**
		6,902.947 Labor hours										
		297.621 Equipment hours										

DIVISION 05 METALS

05 12 00.000.05 *Structural Frame Allowance*

05 12 00.000 *Structural Steel*

AACE Classification Accuracy Range

Upper Range +50% **Lower Range -30%**

Central Kitsap Treatment Plant Solids Handling

Kitsap County

Detail Report with Contractor Markups

Item		Description	Takeoff Qty		Labor Amount	Material Amount	Subcontract Amount	Subcontract Name	Equipment Amount	Other Amount	Total Unit Cost	Total Amount
05 12 00.000		*Structural Steel*										
n	0310	Structural steel project,apartment,nursing home,etc,100-ton project,3 6 stories,a992 steel,shop fabricated,incl shop primer,bolted connections	112,488.129	lb	67,497	400,834	-		19,870	-	4.340 /lb	488,201
	0400	Sprayed fireproofing, cementitious, normal density, beams, 1 hour rated, 1-3/8" thick, excluding canvas protection	2,040.00	SF	3,798	3,201	-		496	-	3.674 /SF	7,495
		05 12 00.000 Structural Steel			*71,295*	*404,034*			*20,366*			*495,696*
		478.138 Labor hours 99.982 Equipment hours										
		05 12 00.000.05 Structural Frame Allowance			*71,295*	*404,034*	*0*		*20,366*	*0*	*242.988/SF*	*495,696*
		2,040.00 SF										
		478.138 Labor hours 99.982 Equipment hours										
		DIVISION 05 METALS			**71,295**	**404,034**	**0**		**20,366**	**0**		**495,696**
		478.138 Labor hours 99.982 Equipment hours										

DIVISION 07 THERMAL, MOISTURE PROTECTION

07.51.00.P005 O & M Building - PVC Built-Up Roofing

07 51 00.000		*Built-Up Roofing System (BUR)*										
	0800	Aluminum coping, stock units, for 12" wall, excludes scaffolding	667.00	lf	19,785	3,642	-		-	-	35.123 /lf	23,427
	2780	2" x 8" miscellaneous wood blocking, to steel construction, per M.B.F.	2.669	mbf	16,847	6,782	-		-	-	8,853.203 /mbf	23,629
	2700	Elastomeric sheet waterproofing, polyvinyl chloride sheets, plain, 30 mils thick	21,040.00	sf	88,631	11,427	-		-	-	4.756 /sf	100,059
	1725	Polyisocyanurate insulation, for roof decks, 2" thick, 2#/CF density, fastening excluded	21,040.00	SF	17,403	37,367	-		-	-	2.603 /SF	54,770
	1745	Polyisocyanurate insulation, for roof decks, 3" thick, 2#/CF density, fastening excluded	21,040.00	sf	19,147	55,813	-		-	-	3.563 /sf	74,960
	0825	Asphalt shingles, #30 felt underlayment	210.00	sq	4,274	4,318	-		-	-	40.913 /sq	8,592
	0100	Sheet metal flashing, aluminum, flexible, mill finish, .032" thick, including up to 4 bends	2,321.00	sf	18,904	23,268	-		-	-	18.170 /sf	42,173
		07 51 00.000 Built-Up Roofing System (BUR)			*184,991*	*142,618*					*15.571/SF*	*327,609*
		21,040.00 SF										
		1,488.407 Labor hours										
		07.51.00.P005 O & M Building - PVC Built-Up Roofing			*184,991*	*142,618*	*0*		*0*	*0*	*15.571/SF*	*327,609*
		21,040.00 SF										
		1,488.407 Labor hours										

AACE Classification Accuracy Range

Upper Range +50% **Lower Range -30%**

Central Kitsap Treatment Plant Solids Handling

Kitsap County

Detail Report with Contractor Markups

Item	Description	Takeoff Qty		Labor Amount	Material Amount	Subcontract Amount	Subcontract Name	Equipment Amount	Other Amount	Total Unit Cost	Total Amount
	DIVISION 07 THERMAL, MOISTURE PROTECTION			**184,991**	**142,618**	**0**		**0**	**0**	**15.571/SF**	**327,609**
	21,040.00 SF										
	1,488.407 Labor hours										
DIVISION 08	**OPENINGS**										
08.11.16.P005	*O & M Building - Exterior Doors - 6' x 7'*										
08 11 16.060	*Aluminum Doors & Frames (6070)*										
3620	Frames, steel, knock down, hollow metal, 14 gauge, up to 5-3/4" D, 7'-0" H, 6'-0" W, double	3.00	EA	552	1,389	-		-	-	647.013 /EA	1,941
5100	Doors, aluminum, commercial entrance, flush panel doors, pair of, 3'-0" x 7'-0", incl. hinges, push/pull, deadlock, cylinder, threshold, excl. glazing	3.00	pr	3,631	11,523	-		-	-	5,051.377 /pr	15,154
3000	Door hardware, panic device, narrow stile, mortise bar, exit only	6.00	ea	1,657	7,091	-		-	-	1,458.03 /ea	8,748
0011	Thresholds, aluminum, 3' long door saddles	18.00	lf	414	427	-		-	-	46.75 /lf	842
1430	Door hardware, hinges, full mortise, high frequency, brass base, US10, 4-1/2" x 4-1/2"	9.00	pr	-	1,073	-		-	-	119.169 /pr	1,073
1200	Paints & coatings, exterior, door & frame, one side, flush, 1 coat, 3' x 7'	6.00	ea	334	27	-		-	-	60.147 /ea	361
	08 11 16.060 Aluminum Doors & Frames (6070)			*6,588*	*21,530*					*9,372.75 /EA*	*28,118*
	3.00 EA										
	45.824 Labor hours										
	08.11.16.P005 O & M Building - Exterior Doors - 6' x 7'			*6,588*	*21,530*	*0*		*0*	*0*	*9,372.75 /EA*	*28,118*
	3.00 EA										
	45.824 Labor hours										
08.11.16.P010	*O & M Building - Interior Doors - 6' x 7'*										
08 11 16.060	*Aluminum Doors & Frames (6070)*										
3620	Frames, steel, knock down, hollow metal, 14 gauge, up to 5-3/4" D, 7'-0" H, 6'-0" W, double	12.00	EA	2,209	5,555	-		-	-	647.004 /EA	7,764
5100	Doors, aluminum, commercial entrance, flush panel doors, pair of, 3'-0" x 7'-0", incl. hinges, push/pull, deadlock, cylinder, threshold, excl. glazing	12.00	pr	14,524	38,411	-		-	-	4,411.201 /pr	52,934
3000	Door hardware, panic device, narrow stile, mortise bar, exit only	24.00	ea	6,628	28,365	-		-	-	1,458.031 /ea	34,993
0011	Thresholds, aluminum, 3' long door saddles	72.00	lf	1,657	1,709	-		-	-	46.749 /lf	3,366
1430	Door hardware, hinges, full mortise, high frequency, brass base, US10, 4-1/2" x 4-1/2"	36.00	pr	-	4,290	-		-	-	119.173 /pr	4,290

Central Kitsap Treatment Plant Solids Handling

Kitsap County

Detail Report with Contractor Markups

Item	Description	Takeoff Qty		Labor Amount	Material Amount	Subcontract Amount	Subcontract Name	Equipment Amount	Other Amount	Total Unit Cost	Total Amount
08 11 16.060	*Aluminum Doors & Frames (6070)*										
1200	Paints & coatings, exterior, door & frame, one side, flush, 1 coat, 3' x 7'	24.00	ea	1,335	108	-		-	-	60.140 /ea	1,443
	08 11 16.060 Aluminum Doors & Frames (6070)			*26,353*	*78,438*					*8,732.557/EA*	*104,791*
	12.00 EA										
	183.294 Labor hours										
	08.11.16.P010 O & M Building - Interior Doors - 6' x 7'			*26,353*	*78,438*	*0*		*0*	*0*	*8,732.557/EA*	*104,791*
	12.00 EA										
	183.294 Labor hours										
08.11.16.P015	*O & M Building - Interior Doors - 3' x 7'*										
08 11 16.030	*Aluminum Doors & Frames (3070)*										
1000	Frames, steel, knock down, hollow metal, single, 16 ga., up to 4-7/8" deep, 3'-0" x 7'-0"	17.00	EA	2,347	6,530	-		-	-	522.188 /EA	8,877
5050	Doors, aluminum, commercial entrance, flush panel doors, single, 3'-0" x 7'-0", incl. hinges, push/pull, deadlock, cylinder, threshold, excl. glazing	17.00	ea	16,460	28,798	-		-	-	2,662.254 /ea	45,258
3000	Door hardware, panic device, narrow stile, mortise bar, exit only	17.00	ea	4,695	20,092	-		-	-	1,458.032 /ea	24,787
0011	Thresholds, aluminum, 3' long door saddles	51.00	lf	1,174	1,211	-		-	-	46.749 /lf	2,384
1430	Door hardware, hinges, full mortise, high frequency, brass base, US10, 4-1/2" x 4-1/2"	25.50	pr	-	3,039	-		-	-	119.172 /pr	3,039
1200	Paints & coatings, exterior, door & frame, one side, flush, 1 coat, 3' x 7'	17.00	ea	946	77	-		-	-	60.14 /ea	1,022
	08 11 16.030 Aluminum Doors & Frames (3070)			*25,621*	*59,746*					*5,021.618/EA*	*85,368*
	17.00 EA										
	176.300 Labor hours										
	08.11.16.P015 O & M Building - Interior Doors - 3' x 7'			*25,621*	*59,746*	*0*		*0*	*0*	*5,021.618/EA*	*85,368*
	17.00 EA										
	176.300 Labor hours										
08.33.23.P005	*O & M Building - Overhead Doors - 14' x 14'*										
08 33 23.000	*Steel Rolling Overhead Doors*										
2500	Doors, rolling service, steel, manual, fire, class A, 20 gauge, 14' x 14' high, incl. hardware	4.00	EA	16,137	31,320	-		-	-	11,864.225 /EA	47,457
3300	Doors, rolling service, steel, manual, for enamel finish, add	784.00	sf	-	3,397	-		-	-	4.334 /sf	3,397
3700	Doors, rolling service, steel, manual, for safety edge bottom bar, electric, add	56.00	lf	-	4,964	-		-	-	88.641 /lf	4,964
4000	Doors, rolling service, steel, manual, for weatherstripping, extruded rubber, jambs, add	168.00	lf	-	5,196	-		-	-	30.926 /lf	5,196

Central Kitsap Treatment Plant Solids Handling

Kitsap County

Detail Report with Contractor Markups

Item	Description	Takeoff Qty		Labor Amount	Material Amount	Subcontract Amount	Subcontract Name	Equipment Amount	Other Amount	Total Unit Cost	Total Amount
08 33 23.000	*Steel Rolling Overhead Doors*										
4500	Doors, rolling service, steel, manual, motor operators for, to 14' x 14' opening	4.00	ea	1,936	9,455	-		-	-	2,847.863 /ea	11,391
4700	Doors, rolling service, steel, manual, for fire door, additional fusible link, add	16.00	ea	-	977	-		-	-	61.063 /ea	977
	08 33 23.000 Steel Rolling Overhead Doors			*18,074*	*55,308*					*18,345.553/EA*	*73,382*
	4.00 EA										
	119.467 Labor hours										
	08.33.23.P005 O & M Building - Overhead Doors - 14' x 14'			*18,074*	*55,308*	*0*		*0*	*0*	*18,345.553/EA*	*73,382*
	4.00 EA										
	119.467 Labor hours										
	DIVISION 08 OPENINGS			**76,636**	**215,023**	**0**		**0**	**0**	**8,101.629/EA**	**291,659**
	36.00 EA										
	524.884 Labor hours										
DIVISION 09	**FINISHES**										
09 29 00.001.10	*Building Allowance Cost*										
01 21 00.000	*Allowances*										
2100	Interior Finishes Allowance	21,040.00	SF	23,242		191,441		-	-	10.204 /SF	214,683
2100	Tile Allowance	21,040.00	sf	23,242		382,883		-	-	19.303 /sf	406,125
	01 21 00.000 Allowances			*46,483*		*574,324*				*29.506/SF*	*620,808*
	21,040.00 SF										
	336.64 Labor hours										
	09 29 00.001.10 Building Allowance Cost			*46,483*	*0*	*574,324*		*0*	*0*	*29.506/SF*	*620,808*
	21,040.00 SF										
	336.64 Labor hours										
09.29.00.P005	*O & M Building - Interior Walls - 10' HIgh x 1,000 LF*										
09 29 00.001	*2-sided Drywall Partition on 3 5/8" Metal Studs*										
0120	Blanket insulation, for walls or ceilings, kraft faced fiberglass, 3-1/2" thick, R15, 15" wide	10,000.00	sf	8,182	10,046	-		-	-	1.823 /sf	18,228
2300	Metal stud partition, non-load bearing, galvanized, 10' high, 3-5/8" wide,25 gauge, 16" O.C., includes top & bottom track	10,000.00	SF	23,013	7,485	-		-	-	3.050 /SF	30,498
3600	Gypsum board, for taping & finishing joints, add	20,000.00	sf	22,093	1,970	-		-	-	1.203 /sf	24,062
2100	Gypsum wallboard, on walls, fire resistant, 5/8" thick, finish excluded	20,000.00	sf	22,093	14,182	-		-	-	1.814 /sf	36,275

Central Kitsap Treatment Plant Solids Handling

Kitsap County

Detail Report with Contractor Markups

Item	Description	Takeoff Qty	Labor Amount	Material Amount	Subcontract Amount	Subcontract Name	Equipment Amount	Other Amount	Total Unit Cost	Total Amount
	09 29 00.001 2-sided Drywall Partition on 3 5/8" Metal Studs		*75,381*	*33,683*					*10.906/SF*	*109,065*
	10,000.00 SF									
	545.926 Labor hours									
	09.29.00.P005 O & M Building - Interior Walls - 10' HIgh x 1,000 LF		*75,381*	*33,683*	*0*		*0*	*0*	*10.906/SF*	*109,065*
	10,000.00 SF									
	545.926 Labor hours									
	DIVISION 09 FINISHES		**121,864**	**33,683**	**574,324**		**0**	**0**		**729,872**
	882.566 Labor hours									

DIVISION 21 FIRE SUPPRESSION

21.10.00.P005 *O & M Building - Wet Based Fire Protection*

21 10 00.000 *Water Based Fire Suppression Systems*

	6260	Sprinkler system valve alarm, 3" size, includes retard chamber, trim, gauges & alarm line strainer	1.578	ea	1,594	6,897	-		-	-	5,380.894 /ea	8,491
	6520	Sprinkler system components, valves, check, swing, cast iron body, brass fittings, automatic ball drip, 4" size	1.578	ea	1,594	1,846	-		-	-	2,179.987 /ea	3,440
	8840	Sprinkler system components, valves, flow control, 4" size, includes trim & gauges	1.578	ea	3,595	15,056	-		-	-	11,819.42 /ea	18,651
	7160	Standpipe connections, wall, with plugs & chains, single, flush, brass, 2-1/2" x 2-1/2"	1.578	ea	957	688	-		-	-	1,042.07 /ea	1,644
	1220	Sprinkler system components, alarm, water motor, complete with gong	1.578	ea	652	1,418	-		-	-	1,311.635 /ea	2,070
n	3720	Sprinkler system components,sprinkler heads,standard spray,pendent upright,brass,135 286 degrees f,1/2"npt,3/8"orifice,excludes supply piping	88.369	ea	9,123	5,984	-		-	-	170.948 /ea	15,106
	1110	Valves, bronze, angle, rising stem, threaded, 150 lb., 2"	1.578	ea	241	3,691	-		-	-	2,491.831 /ea	3,932
	1910	Valves, bronze, check, swing, regrinding disc, threaded, class 150, 2-1/2"	1.578	ea	325	4,177	-		-	-	2,852.681 /ea	4,502
	3450	Valves, bronze, gate, non-rising stem, threaded, class 150, 1"	1.578	ea	140	692	-		-	-	526.711 /ea	831
	0580	Pipe, steel, black, threaded, 1" diameter, schedule 40, Spec. A-53, includes coupling and clevis hanger assembly sized for covering, 10' OC	361.367	lf	11,452	3,462	-		-	-	41.271 /lf	14,914
	0590	Pipe, steel, black, threaded, 1-1/4" diameter, schedule 40, Spec. A-53, includes coupling and clevis hanger assembly sized for covering, 10' OC	179.895	lf	6,240	2,237	-		-	-	47.124 /lf	8,477
	0600	Pipe, steel, black, threaded, 1-1/2" diameter, schedule 40, Spec. A-53, includes coupling and clevis hanger assembly sized for covering, 10' OC	361.367	lf	13,946	5,250	-		-	-	53.120 /lf	19,196

Central Kitsap Treatment Plant Solids Handling

Kitsap County

Detail Report with Contractor Markups

Item		Description	Takeoff Qty		Labor Amount	Material Amount	Subcontract Amount	Subcontract Name	Equipment Amount	Other Amount	Total Unit Cost	Total Amount
21 10 00.000		*Water Based Fire Suppression Systems*										
	0610	Pipe, steel, black, threaded, 2" diameter, schedule 40, Spec. A-53, includes coupling and clevis hanger assembly sized for covering, 10' OC	310.871	lf	14,995	6,048	-		-	-	67.690 /lf	21,043
	0620	Pipe, steel, black, threaded, 2-1/2" diameter, schedule 40, Spec. A-53, includes coupling and clevis hanger assembly sized for covering, 10' OC	98.626	lf	6,088	3,569	-		-	-	97.920 /lf	9,657
	2110	Pipe, steel, black, welded, 4" diameter, schedule 40, Spec. A-53, includes yoke & roll hanger assembly, sized for covering, 10' OC	15.78	lf	1,316	874	-		110	-	145.775 /lf	2,300
	5100	Elbow, 90 Deg., steel, malleable iron, black, straight, threaded, 150 lb., 1"	15.78	ea	2,039	375	-		-	-	152.949 /ea	2,414
	5130	Elbow, 90 Deg., steel, malleable iron, black, straight, threaded, 150 lb., 2"	3.156	ea	541	280	-		-	-	260.150 /ea	821
	5510	Tee, steel, malleable iron, black, straight, threaded, 150 lb., 1"	12.624	ea	2,650	469	-		-	-	247.10 /ea	3,119
	5520	Tee, steel, malleable iron, black, straight, threaded, 150 lb., 1-1/4"	12.624	ea	2,783	762	-		-	-	280.804 /ea	3,545
	5530	Tee, steel, malleable iron, black, straight, threaded, 150 lb., 1-1/2"	25.248	ea	5,995	1,896	-		-	-	312.550 /ea	7,891
	5540	Tee, steel, malleable iron, black, straight, threaded, 150 lb., 2"	25.248	ea	7,085	3,233	-		-	-	408.647 /ea	10,318
	5550	Tee, steel, malleable iron, black, straight, threaded, 150 lb., 2-1/2"	9.468	ea	3,247	2,611	-		-	-	618.742 /ea	5,858
	5580	Tee, steel, malleable iron, black, straight, threaded, 150 lb., 4"	3.156	ea	2,435	3,108	-		-	-	1,756.61 /ea	5,544
	3680	Valves, iron body, gate, OS&Y, flanged, 125 lb., 4"	1.578	ea	1,624	3,808	-		-	-	3,441.90 /ea	5,431
	5800	Detection system, fire alarm horn, excluding wires & conduits	1.578	ea	371	206	-		-	-	365.56 /ea	577
		21 10 00.000 Water Based Fire Suppression Systems			*101,028*	*78,635*			*110*			*179,773*
		641.463 Labor hours 4.264 Equipment hours										
		21.10.00.P005 O & M Building - Wet Based Fire Protection			*101,028*	*78,635*	*0*		*110*	*0*		*179,773*
		641.463 Labor hours 4.264 Equipment hours										
		DIVISION 21 FIRE SUPPRESSION			**101,028**	**78,635**	**0**		**110**	**0**		**179,773**
		641.463 Labor hours 4.264 Equipment hours										
DIVISION 22		**PLUMBING**										
22 05 03.300.05		*Building Plumbing Allowance*										
22 05 03.300		*Plumbing, Other*										
n	0999	Building Plumbing Allowance	21,040.00	BSF			765,766				36.396 /BSF	765,766
		22 05 03.300 Plumbing, Other					*765,766*				*36.396/BSF*	*765,766*
		21,040.00 BSF										

AACE Classification Accuracy Range

Upper Range +50% **Lower Range -30%**

Central Kitsap Treatment Plant Solids Handling

Kitsap County

Detail Report with Contractor Markups

Item		Description	Takeoff Qty		Labor Amount	Material Amount	Subcontract Amount	Name	Equipment Amount	Other Amount	Total Unit Cost	Total Amount
		22 05 03.300 Plumbing, Other					*765,766*				*36.396/BSF*	*765,766*
		21,040.00 BSF										
		22 05 03.300.05 Building Plumbing Allowance			*0*	*0*	*765,766*		*0*	*0*	*36.396/BSF*	*765,766*
		21,040.00 BSF										
		DIVISION 22 PLUMBING			**0**	**0**	**765,766**		**0**	**0**	**36.396/BSF**	**765,766**
		21,040.00 BSF										
DIVISION 23		**HEATING, VENTILATING & AIR-CONDITIONING (HVAC)**										
23 00 00.000.05		*Building HVAC Allowance*										
23 00 00.000		*HVAC Basic Materials and Methods*										
n	0999	Building HVAC Allowance	21,040.00	BSF			1,148,649				54.594 /BSF	1,148,649
		23 00 00.000 HVAC Basic Materials and Methods					*1,148,649*				*54.594/BSF*	*1,148,649*
		21,040.00 BSF										
		23 00 00.000.05 Building HVAC Allowance			*0*	*0*	*1,148,649*		*0*	*0*	*54.594/BSF*	*1,148,649*
		21,040.00 BSF										
		DIVISION 23 HEATING, VENTILATING & AIR-CONDITIONING (HVAC)			**0**	**0**	**1,148,649**		**0**	**0**	**54.594/BSF**	**1,148,649**
		21,040.00 BSF										
DIVISION 31		**EARTHWORK**										
31.23.10.P005		*Excavation, Backfill, and Haul Off-Site*										
31 23 10.000		*Excavation, Backfill, and Haul Off-Site*										
n	6260	Strt excvt for minor strtr,bank measr,for sprd and mat ftngs,elvtr pits,and small bldng fndtn,sandy clay loam,2 cy bucket,machin excvtn,hydrlc backhoe	2,740.00	CY	25,474	-	-		21,437	-	17.121 /CY	46,911
	4010	Backfill, structural, sandy clay & loam, 200 H.P. dozer, 50' haul, from existing stockpile, excludes compaction	1,550.00	CY	975	-	-		1,701	-	1.726 /CY	2,675
	4060	Borrow, common earth, 1-1/2 C.Y. bucket, loading and/or spreading, front end loader, wheel-mounted	1,550.00	CY	2,447	22,565	-		1,202	-	16.912 /CY	26,214

Central Kitsap Treatment Plant Solids Handling

Kitsap County

Detail Report with Contractor Markups

Item		Description	Takeoff Qty		Labor Amount	Material Amount	Subcontract Amount	Name	Equipment Amount	Other Amount	Total Unit Cost	Total Amount
31 23 10.000		*Excavation, Backfill, and Haul Off-Site*										
n	0560	Hauling,excavated borrow material,loose cubic yards,20 mile round trip,0.4 load/hr,base wide rate,12 cy truck,highway haulers,excludes loading	1,260.00	CY	31,732	-	-		32,880	-	51.279 /CY	64,611
	0400	Compaction, structural, select fill, 8" lifts, sheepsfoot or wobbly wheel roller	1,550.00	CY	1,582	-	-		2,474	-	2.617 /CY	4,057
		31 23 10.000 Excavation, Backfill, and Haul Off-Site			*62,209*	*22,565*			*59,694*		*16.702/CY*	*144,469*
		8,650.00 CY										
		500.641 Labor hours										
		386.088 Equipment hours										
		31.23.10.P005 Excavation, Backfill, and Haul Off-Site			*62,209*	*22,565*	*0*		*59,694*	*0*	*16.702/CY*	*144,469*
		8,650.00 CY										
		500.641 Labor hours										
		386.088 Equipment hours										
		DIVISION 31 EARTHWORK			**62,209**	**22,565**	**0**		**59,694**	**0**	**16.702/CY**	**144,469**
		8,650.00 CY										
		500.641 Labor hours										
		386.088 Equipment hours										

DIVISION 32 EXTERIOR IMPROVEMENTS

32 15 40.0100.05 Pipe Storage Gravel, 6" Thick x 5,165 SF

32 15 40.0100		*Gravel Roadway*										
	0100	Aggregate for earthwork, bank run gravel, spread with 200 H.P. dozer, includes load at pit and haul, 2 miles round trip, excludes compaction	96.00	lcy	559	4,804	-		753	-	63.715 /lcy	6,117
	0012	Fine grading, finish grading, small area, to be paved with grader	573.874	SY	2,804	-	-		2,707	-	9.602 /SY	5,511
	5020	Compaction, riding, vibrating roller, 3 passes, 6" lifts	96.00	ecy	64	-	-		43	-	1.113 /ecy	107
n	0560	Hauling, asphalt material,loose cubic yards,20 mile round trip,0.4 load/hr,base wide rate,12 cy truck,highway haulers,excludes loading	73.00	lcy	1,838	-	-		1,905	-	51.279 /lcy	3,743
		32 15 40.0100 Gravel Roadway			*5,266*	*4,804*			*5,408*		*26.97 /SY*	*15,477*
		573.874 SY										
		42.910 Labor hours										
		30.626 Equipment hours										
		32 15 40.0100.05 Pipe Storage Gravel, 6" Thick x 5,165 SF			*5,266*	*4,804*	*0*		*5,408*	*0*	*26.97 /SY*	*15,477*
		573.874 SY										
		42.910 Labor hours										

AACE Classification Accuracy Range

Upper Range +50% **Lower Range -30%**

Central Kitsap Treatment Plant Solids Handling

Kitsap County

Detail Report with Contractor Markups

Item		Description	Takeoff Qty		Labor Amount	Material Amount	Subcontract Amount	Subcontract Name	Equipment Amount	Other Amount	Total Unit Cost	Total Amount
		32 15 40.0100.05 Pipe Storage Gravel, 6" Thick x 5,165 SF			*5,266*	*4,804*	*0*		*5,408*	*0*	*26.97 /SY*	*15,477*
		573.874 SY										
		42.910 Labor hours										
		30.626 Equipment hours										
32 31 13.000.05		*Chainlink Fence - 6' High x 204 LF*										
32 31 13.000		*Chain Link Fence and Gates*										
n	7820	Chain link fence gates and posts, motor operators for gates, up to 45' sliding, excludes electric wiring & excavation	1.00	ea	4,313	5,323	-		-	-	9,635.65 /ea	9,636
	0200	High-security chain link fences, gates & systems, 3 wire barbed wire fence, 6' high, includes excavation and posts	204.00	LF	1,343	2,023	-		226	-	17.610 /LF	3,592
		32 31 13.000 Chain Link Fence and Gates			*5,655*	*7,346*			*226*		*64.843/LF*	*13,228*
		204.00 LF										
		44.24 Labor hours										
		8.16 Equipment hours										
		32 31 13.000.05 Chainlink Fence - 6' High x 204 LF			*5,655*	*7,346*	*0*		*226*	*0*	*64.843/LF*	*13,228*
		204.00 LF										
		44.24 Labor hours										
		8.16 Equipment hours										
		DIVISION 32 EXTERIOR IMPROVEMENTS			**10,921**	**12,150**	**0**		**5,634**	**0**	**28,705.43 /LS**	**28,705**
		1.00 LS										
		87.150 Labor hours										
		38.786 Equipment hours										
DIVISION 41		**MATERIAL PROCESSING & HANDLING EQUIPMENT**										
41 22 23.000.05		*Monorail, 200 LF*										
41 22 23.000		*Hoists, Trolleys, and Monorails*										
	3900	Conveyors, material handling, monorail, overhead, manual, channel type, 500 lb per LF	200.00	LF	16,858	14,477	-		-	-	156.674 /LF	31,335
	4300	Conveyors, material handling, monorail, overhead, manual, channel type, trolleys for, 8 wheel, 500 lb capacity	3.00	EA	-	8,244	-		-	-	2,747.843 /EA	8,244
		41 22 23.000 Hoists, Trolleys, and Monorails			*16,858*	*22,721*					*197.892/LF*	*39,578*
		200.00 LF										
		114.279 Labor hours										

AACE Classification Accuracy Range

Upper Range +50% **Lower Range -30%**

Central Kitsap Treatment Plant Solids Handling

Kitsap County

Detail Report with Contractor Markups

Item	Description	Takeoff Qty	Labor Amount	Material Amount	Subcontract Amount	Subcontract Name	Equipment Amount	Other Amount	Total Unit Cost	Total Amount
	41 22 23.000.05 Monorail, 200 LF		*16,858*	*22,721*	*0*		*0*	*0*	*197.892/LF*	*39,578*
	200.00 LF									
	114.279 Labor hours									
	DIVISION 41 MATERIAL PROCESSING & HANDLING EQUIPMENT		**16,858**	**22,721**	**0**		**0**	**0**	**197.892/LF**	**39,578**
	200.00 LF									
	114.279 Labor hours									
	466 O&M BUILDING		***1,835,012***	***2,584,931***	***2,488,739***		***149,274***	***0***	***335.454/BSF***	***7,057,957***
	21,040.00 BSF									
	14,194.323 Labor hours									
	1,394.493 Equipment hours									

500 CENTRATE STORAGE - EXISTING GRAV THICKENER

DIVISION 03 CONCRETE

03 09 00.885.15 *Concrete Fill, 10'-10" Deep x 9'-5"Long x 5' Wide*

Item	Description	Takeoff Qty	Labor Amount	Material Amount	Subcontract Amount	Subcontract Name	Equipment Amount	Other Amount	Total Unit Cost	Total Amount
03 09 00.885	*Concrete_Grout/Flowable Fill*									
4350	Structural concrete, placing, slab on grade, pumped, up to 6" thick, includes leveling (strike off) & consolidation, excludes material	18.892 CY	1,003	-	-		113	-	59.060 /CY	1,116
n 4350	Strt concret,ready mix,flowabl fill,strt,1000 psi,includs ash,portlnd cement type i,aggregt,sand and water,delivrd,excluds all additvs and treatments (Flow Fill)	18.892 cy	-	2,729	-		-	-	144.462 /cy	2,729
	03 09 00.885 Concrete_Grout/Flowable Fill		*1,003*	*2,729*			*113*		*203.522/CY*	*3,845*
	18.892 CY									
	9.301 Labor hours									
	3.488 Equipment hours									
	03 09 00.885.15 Concrete Fill, 10'-10" Deep x 9'-5"Long x 5' Wide		*1,003*	*2,729*	*0*		*113*	*0*	*203.522/CY*	*3,845*
	18.892 CY									
	9.301 Labor hours									
	3.488 Equipment hours									

03 11 13.502.05 *Concrete Centre Slab, 8" Thick x 1,510 SF*

03 11 13.502 *08" Slab on Grade*

Central Kitsap Treatment Plant Solids Handling

Kitsap County

Detail Report with Contractor Markups

	Item	Description	Takeoff Qty		Labor Amount	Material Amount	Subcontract Amount	Subcontract Name	Equipment Amount	Other Amount	Total Unit Cost	Total Amount
03 11 13.502		*08" Slab on Grade*										
	3050	C.I.P. concrete forms, slab on grade, edge, wood, 7" to 12" high, 4 use, includes erecting, bracing, stripping and cleaning	103.676	sfca	899	218	-		-	-	10.767 /sfca	1,116
n	9015	C.I.P. concrete forms, bulkhead for slab on grade w/ keyway, up to 12", exp metal, includes erecting, bracing, stripping and cleaning	50.359	sfca	260	39	-		-	-	5.938 /sfca	299
n	2050	Reinforcing steel, unload and sort, add to base_SLAB ON GRADE	3.325	ton	250	-	-		109	-	108.048 /ton	359
	0600	Reinforcing steel, in place, slab on grade, #3 to #7, A615, grade 60, incl labor for accessories, excl material for accessories	3.325	ton	6,252	8,292	-		-	-	4,374.03 /ton	14,544
	2220	Reinforcing steel, crane cost for handling, 90 picks/day, up to 0.5 Ton/day	3.325	ton	715	-	-		311	-	308.722 /ton	1,027
	4650	Structural concrete, placing, slab on grade, pumped, over 6" thick, includes leveling (strike off) & consolidation, excludes material	3.80	cy	142	-	-		16	-	41.495 /cy	158
	4650	Structural concrete, placing, slab on grade, pumped, over 6" thick, includes leveling (strike off) & consolidation, excludes material	38.00	cy	1,418	-	-		159	-	41.501 /cy	1,577
n	0725	Struct SLAB ON GRADE concrete,ready mix,normal wt,4500 psi,includes local aggregate,sand,portland cement and water,delivered, includes all additives	3.80	cy	-	1,503	-		-	-	395.555 /cy	1,503
n	0725	Struct SLAB ON GRADE concrete,ready mix,normal wt,4500 psi,includes local aggregate,sand,portland cement and water,delivered, includes all additives	38.00	CY	-	15,031	-		-	-	395.551 /CY	15,031
n	0255	Concrete finishing, floors, manual screed, bull float, machine float & steel trowel (walk-behind)_SOG	1,510.022	sf	2,350	-	-		128	-	1.641 /sf	2,478
n	0122	Control joint, concrete floor slab, sawcut in green concrete, 1" depth_SOG	75.501	lf	70	4	-		7	-	1.076 /lf	81
n	0215	Control joint, clean out control joint of debris_SOG	75.501	lf	12	-	-			-	0.155 /lf	12
n	0367	Control joint, joint sealant, polyurethane, 1/4" x 1/4" (308 LF/Gal)_SOG	151.002	lf	521	42	-		-	-	3.722 /lf	562
n	0310	Concrete surface treatment, curing, sprayed membrane compound_SOG	15.10	csf	257	193	-		-	-	29.834 /csf	451
	1200	Vapor retarders, building paper, polyethylene vapor barrier, standard, 10 mil (.010" thick)	15.10	sq	403	212	-		-	-	40.705 /sq	615
n	1310	Fill, gravel fill, compacted, under floor slabs, alternate pricing method, 12" deep_SOG	64.00	ecy	1,487	3,522	-		124	-	80.204 /ecy	5,133
n	1136	Hauling, excavated borrow material, loose cubic yards, 20 mile round trip, 0.4 loads/hour, 16.5 c.y. dump trailer, highway haulers, excludes loading	64.00	lcy	1,111	-	-		1,247	-	36.849 /lcy	2,358
		03 11 13.502 08" Slab on Grade			*16,147*	*29,055*			*2,101*		*1,244.814/CY*	*47,303*

38.00 CY

133.294 Labor hours
35.078 Equipment hours

AACE Classification Accuracy Range

Upper Range +50% **Lower Range -30%**

Central Kitsap Treatment Plant Solids Handling

Kitsap County

Detail Report with Contractor Markups

	Item	Description	Takeoff Qty		Labor Amount	Material Amount	Subcontract Amount	Subcontract Name	Equipment Amount	Other Amount	Total Unit Cost	Total Amount
		03 11 13.502.05 Concrete Centre Slab, 8" Thick x 1,510 SF			*16,147*	*29,055*	*0*		*2,101*	*0*	*1,244.814/CY*	*47,303*
		38.00 CY										
		133.294 Labor hours										
		35.078 Equipment hours										
03 11 13.504.50		*Concrete Launder Wall, 4' High x 146 LF*										
03 11 13.804		*12" CIP Wall*										
	0500	C.I.P. concrete forms, wall, wood bulkhead with 2 piece keyway, 1 use, includes erecting, bracing, stripping and cleaning	30.00	lf	658	175	-		-	-	27.767 /lf	833
	2550	C.I.P. concrete forms, wall, job built, plywood, over 8' to 16' high, 4 use, includes erecting, bracing, stripping and cleaning	1,168.00	sfca	17,176	1,989	-		-	-	16.408 /sfca	19,165
	5200	Chamfer strip, wood, 3/4" wide	59.00	lf	111	14	-		-	-	2.121 /lf	125
	1400	Tie cones, plastic, for coil tie system, for CIP wall forms, 1/2" bolt diameter x 1" setback length, includes material only	1.00	c	-	112	-		-	-	111.78 /c	112
n	3010	Waterstop, rubber, center bulb, 1/4" thick x 6" wide_WALLS	176.00	lf	1,199	2,270	-		-	-	19.708 /lf	3,469
	0100	Splice rebar, standard, self-aligning type, taper threaded, #4 bars, includes holding rebar in place while splicing	24.20	ea	441	533	-		-	-	40.247 /ea	974
n	2020	Reinforcing steel, unload and sort, add to base_WALLS	2.20	ton	166	-	-		72	-	108.04 /ton	238
n	2214	Reinforcing steel, crane cost for handling, average, add_WALLS	2.20	ton	180	-	-		78	-	117.455 /ton	258
	0700	Reinforcing steel, in place, walls, #3 to #7, A615, grade 60, incl labor for accessories, excl material for accessories	2.20	ton	3,172	5,486	-		-	-	3,935.277 /ton	8,658
	5100	Structural concrete, placing, walls, pumped, 12" thick, includes leveling (strike off) & consolidation, excludes material	2.20	cy	138	-	-		16	-	69.805 /cy	154
	5100	Structural concrete, placing, walls, pumped, 12" thick, includes leveling (strike off) & consolidation, excludes material	22.00	cy	1,381	-	-		155	-	69.798 /cy	1,536
n	0525	Struct WALLS concrete,ready mix,normal wt,4500 psi,includes local aggregate,sand,portland cement and water,delivered, includes all additives	22.00	CY	-	8,702	-		-	-	395.551 /CY	8,702
n	0525	Struct WALLS concrete,ready mix,normal wt,4500 psi,includes local aggregate,sand,portland cement and water,delivered, includes all additives	2.20	cy	-	870	-		-	-	395.55 /cy	870
n	0210	Control joint, clean out control joint of debris_WALLS	30.00	lf	5	-	-			-	0.155 /lf	5
n	0366	Control joint, joint sealant, polyurethane, 1/4" x 1/4" (308 LF/Gal)_WALLS	30.00	lf	103	8	-		-	-	3.722 /lf	112
	0020	Concrete finishing, walls, includes breaking ties and patching voids	1,168.00	sf	2,013	80	-		-	-	1.792 /sf	2,093

Central Kitsap Treatment Plant Solids Handling

Kitsap County

Detail Report with Contractor Markups

	Item	Description	Takeoff Qty		Labor Amount	Material Amount	Subcontract Amount	Name	Equipment Amount	Other Amount	Total Unit Cost	Total Amount
03 11 13.804		*12" CIP Wall*										
	0050	Concrete finishing, walls, burlap rub with grout, includes breaking ties and patching voids	584.00	sf	1,208	40	-		-	-	2.137 /sf	1,248
		03 11 13.804 12" CIP Wall			*27,950*	*20,280*			*321*		*2,206.836/CY*	*48,550*
		22.00 CY										
		230.785 Labor hours										
		5.647 Equipment hours										
		03 11 13.504.50 Concrete Launder Wall, 4' High x 146 LF			*27,950*	*20,280*	*0*		*321*	*0*	*2,206.836/CY*	*48,550*
		22.00 CY										
		230.785 Labor hours										
		5.647 Equipment hours										
03 11 13.505.20		*Concrete Slab, 16" Thick x 60 SF*										
03 11 13.505		*16" Slab on Grade*										
	3050	C.I.P. concrete forms, slab on grade, edge, wood, 7" to 12" high, 4 use, includes erecting, bracing, stripping and cleaning	41.302	sfca	358	87	-		-	-	10.767 /sfca	445
n	9015	C.I.P. concrete forms, bulkhead for slab on grade w/ keyway, up to 12", exp metal, includes erecting, bracing, stripping and cleaning	3.999	sfca	21	3	-		-	-	5.936 /sfca	24
n	2050	Reinforcing steel, unload and sort, add to base_SLAB ON GRADE	0.263	ton	20	-	-		9	-	108.137 /ton	28
	0600	Reinforcing steel, in place, slab on grade, #3 to #7, A615, grade 60, incl labor for accessories, excl material for accessories	0.263	ton	495	656	-		-	-	4,374.030 /ton	1,150
	2220	Reinforcing steel, crane cost for handling, 90 picks/day, up to 0.5 Ton/day	0.263	ton	57	-	-		25	-	308.70 /ton	81
	4650	Structural concrete, placing, slab on grade, pumped, over 6" thick, includes leveling (strike off) & consolidation, excludes material	3.00	cy	112	-	-		13	-	41.507 /cy	125
	4650	Structural concrete, placing, slab on grade, pumped, over 6" thick, includes leveling (strike off) & consolidation, excludes material	0.30	cy	11	-	-		1	-	41.533 /cy	12
n	0725	Struct SLAB ON GRADE concrete,ready mix,normal wt,4500 psi,includes local aggregate,sand,portland cement and water,delivered, includes all additives	3.00	CY	-	1,187	-		-	-	395.54 /CY	1,187
n	0725	Struct SLAB ON GRADE concrete,ready mix,normal wt,4500 psi,includes local aggregate,sand,portland cement and water,delivered, includes all additives	0.30	cy	-	119	-		-	-	395.60 /cy	119
n	0255	Concrete finishing, floors, manual screed, bull float, machine float & steel trowel (walk-behind)_SOG	60.001	sf	93	-	-		5	-	1.641 /sf	98
n	0122	Control joint, concrete floor slab, sawcut in green concrete, 1" depth_SOG	3.00	lf	3	0	-		0	-	1.08 /lf	3
n	0215	Control joint, clean out control joint of debris_SOG	3.00	lf	0	-	-			-	0.153 /lf	0

AACE Classification Accuracy Range

Upper Range +50% **Lower Range -30%**

Central Kitsap Treatment Plant Solids Handling

Kitsap County

Detail Report with Contractor Markups

	Item	Description	Takeoff Qty		Labor Amount	Material Amount	Subcontract Amount	Subcontract Name	Equipment Amount	Other Amount	Total Unit Cost	Total Amount
03 11 13.505		*16" Slab on Grade*										
n	0367	Control joint, joint sealant, polyurethane, 1/4" x 1/4" (308 LF/Gal)_SOG	6.00	lf	21	2	-		-	-	3.725 /lf	22
n	0310	Concrete surface treatment, curing, sprayed membrane compound_SOG	0.60	csf	10	8	-		-	-	29.833 /csf	18
	1200	Vapor retarders, building paper, polyethylene vapor barrier, standard, 10 mil (.010" thick)	0.60	sq	16	8	-		-	-	40.67 /sq	24
n	1310	Fill, gravel fill, compacted, under floor slabs, alternate pricing method, 12" deep_SOG	3.00	ecy	70	165	-		6	-	80.213 /ecy	241
n	1136	Hauling, excavated borrow material, loose cubic yards, 20 mile round trip, 0.4 loads/hour, 16.5 c.y. dump trailer, highway haulers, excludes loading	3.00	lcy	52	-	-		58	-	36.84 /lcy	111
		03 11 13.505 16" Slab on Grade			*1,338*	*2,234*			*117*		*1,229.56 /CY*	*3,689*
		3.00 CY										
		10.957 Labor hours										
		1.799 Equipment hours										
		03 11 13.505.20 Concrete Slab, 16" Thick x 60 SF			*1,338*	*2,234*	*0*		*117*	*0*	*1,229.56 /CY*	*3,689*
		3.00 CY										
		10.957 Labor hours										
		1.799 Equipment hours										
03 11 13.512.05		*Concrete Centre Center Slab, 36" Thick x 62 SF*										
03 11 13.512		*38" Slab on Grade*										
	3050	C.I.P. concrete forms, slab on grade, edge, wood, 7" to 12" high, 4 use, includes erecting, bracing, stripping and cleaning	94.488	sfca	819	198	-		-	-	10.767 /sfca	1,017
n	9015	C.I.P. concrete forms, bulkhead for slab on grade w/ keyway, up to 12", exp metal, includes erecting, bracing, stripping and cleaning	9.30	sfca	48	7	-		-	-	5.938 /sfca	55
n	2050	Reinforcing steel, unload and sort, add to base_SLAB ON GRADE	0.613	ton	46	-	-		20	-	108.08 /ton	66
	0600	Reinforcing steel, in place, slab on grade, #3 to #7, A615, grade 60, incl labor for accessories, excl material for accessories	0.613	ton	1,153	1,529	-		-	-	4,374.013 /ton	2,681
	2220	Reinforcing steel, crane cost for handling, 90 picks/day, up to 0.5 Ton/day	0.613	ton	132	-	-		57	-	308.70 /ton	189
	4650	Structural concrete, placing, slab on grade, pumped, over 6" thick, includes leveling (strike off) & consolidation, excludes material	0.70	cy	26	-	-		3	-	41.51 /cy	29
	4650	Structural concrete, placing, slab on grade, pumped, over 6" thick, includes leveling (strike off) & consolidation, excludes material	7.00	cy	261	-	-		29	-	41.50 /cy	291
n	0725	Struct SLAB ON GRADE concrete,ready mix,normal wt,4500 psi,includes local aggregate,sand,portland cement and water,delivered, includes all additives	0.70	cy	-	277	-		-	-	395.54 /cy	277

Central Kitsap Treatment Plant Solids Handling

Kitsap County

Detail Report with Contractor Markups

	Item	Description	Takeoff Qty		Labor Amount	Material Amount	Subcontract Amount	Subcontract Name	Equipment Amount	Other Amount	Total Unit Cost	Total Amount
03 11 13.512		*38" Slab on Grade*										
n	0725	Struct SLAB ON GRADE concrete,ready mix,normal wt,4500 psi,includes local aggregate,sand,portland cement and water,delivered, includes all additives	7.00	CY	-	2,769	-		-	-	395.55 /CY	2,769
n	0255	Concrete finishing, floors, manual screed, bull float, machine float & steel trowel (walk-behind)_SOG	62.00	sf	97	-	-		5	-	1.642 /sf	102
n	0122	Control joint, concrete floor slab, sawcut in green concrete, 1" depth_SOG	3.10	lf	3	0	-		0	-	1.065 /lf	3
n	0215	Control joint, clean out control joint of debris_SOG	3.10	lf	1	-	-			-	0.168 /lf	1
n	0367	Control joint, joint sealant, polyurethane, 1/4" x 1/4" (308 LF/Gal)_SOG	6.20	lf	21	2	-		-	-	3.719 /lf	23
n	0310	Concrete surface treatment, curing, sprayed membrane compound_SOG	0.62	csf	11	8	-		-	-	29.823 /csf	18
	1200	Vapor retarders, building paper, polyethylene vapor barrier, standard, 10 mil (.010" thick)	0.62	sq	17	9	-		-	-	40.694 /sq	25
n	1310	Fill, gravel fill, compacted, under floor slabs, alternate pricing method, 12" deep_SOG	3.00	ecy	70	165	-		6	-	80.21 /ecy	241
n	1136	Hauling, excavated borrow material, loose cubic yards, 20 mile round trip, 0.4 loads/hour, 16.5 c.y. dump trailer, highway haulers, excludes loading	3.00	lcy	52	-	-		58	-	36.84 /lcy	111
		03 11 13.512 38" Slab on Grade			*2,755*	*4,963*			*180*		*1,128.304/CY*	*7,898*
		7.00 CY										
		22.292 Labor hours										
		2.487 Equipment hours										
		03 11 13.512.05 Concrete Centre Center Slab, 36" Thick x 62 SF			*2,755*	*4,963*	*0*		*180*	*0*	*1,128.304/CY*	*7,898*
		7.00 CY										
		22.292 Labor hours										
		2.487 Equipment hours										
03 11 13.604.05		*Concrete Centre Center Slab, 74" Thick x 17 SF*										
03 11 13.604		*74" Slab on Grade*										
	3050	C.I.P. concrete forms, slab on grade, edge, wood, 7" to 12" high, 4 use, includes erecting, bracing, stripping and cleaning	101.69	sfca	882	213	-		-	-	10.767 /sfca	1,095
n	9015	C.I.P. concrete forms, bulkhead for slab on grade w/ keyway, up to 12", exp metal, includes erecting, bracing, stripping and cleaning	5.241	sfca	27	4	-		-	-	5.944 /sfca	31
n	2050	Reinforcing steel, unload and sort, add to base_SLAB ON GRADE	0.35	ton	26	-	-		11	-	107.97 /ton	38
	0600	Reinforcing steel, in place, slab on grade, #3 to #7, A615, grade 60, incl labor for accessories, excl material for accessories	0.35	ton	658	873	-		-	-	4,374.029 /ton	1,531
	2220	Reinforcing steel, crane cost for handling, 90 picks/day, up to 0.5 Ton/day	0.35	ton	75	-	-		33	-	308.743 /ton	108

AACE Classification Accuracy Range

Upper Range +50% **Lower Range -30%**

Central Kitsap Treatment Plant Solids Handling

Kitsap County

Detail Report with Contractor Markups

	Item	Description	Takeoff Qty		Labor Amount	Material Amount	Subcontract Amount	Subcontract Name	Equipment Amount	Other Amount	Total Unit Cost	Total Amount
03 11 13.604		*74" Slab on Grade*										
	4650	Structural concrete, placing, slab on grade, pumped, over 6" thick, includes leveling (strike off) & consolidation, excludes material	4.00	cy	149	-	-		17	-	41.495 /cy	166
	4650	Structural concrete, placing, slab on grade, pumped, over 6" thick, includes leveling (strike off) & consolidation, excludes material	0.40	cy	15	-	-		2	-	41.53 /cy	17
n	0725	Struct SLAB ON GRADE concrete,ready mix,normal wt,4500 psi,includes local aggregate,sand,portland cement and water,delivered, includes all additives	0.40	cy	-	158	-		-	-	395.55 /cy	158
n	0725	Struct SLAB ON GRADE concrete,ready mix,normal wt,4500 psi,includes local aggregate,sand,portland cement and water,delivered, includes all additives	4.00	CY	-	1,582	-		-	-	395.553 /CY	1,582
n	0255	Concrete finishing, floors, manual screed, bull float, machine float & steel trowel (walk-behind)_SOG	16.999	sf	26	-	-		1	-	1.642 /sf	28
n	0122	Control joint, concrete floor slab, sawcut in green concrete, 1" depth_SOG	0.85	lf	1	0	-		0	-	1.08 /lf	1
n	0215	Control joint, clean out control joint of debris_SOG	0.85	lf	0	-	-			-	0.14 /lf	0
n	0367	Control joint, joint sealant, polyurethane, 1/4" x 1/4" (308 LF/Gal)_SOG	1.70	lf	6	0	-		-	-	3.729 /lf	6
n	0310	Concrete surface treatment, curing, sprayed membrane compound_SOG	0.17	csf	3	2	-		-	-	29.765 /csf	5
	1200	Vapor retarders, building paper, polyethylene vapor barrier, standard, 10 mil (.010" thick)	0.17	sq	5	2	-		-	-	40.76 /sq	7
n	1310	Fill, gravel fill, compacted, under floor slabs, alternate pricing method, 12" deep_SOG	1.00	ecy	23	55	-		2	-	80.21 /ecy	80
n	1136	Hauling, excavated borrow material, loose cubic yards, 20 mile round trip, 0.4 loads/hour, 16.5 c.y. dump trailer, highway haulers, excludes loading	1.00	lcy	17	-	-		19	-	36.82 /lcy	37
		03 11 13.604 74" Slab on Grade			*1,914*	*2,891*			*86*		*1,222.528/CY*	*4,890*
		4.00 CY										
		15.586 Labor hours										
		1.094 Equipment hours										
		03 11 13.604.05 Concrete Centre Center Slab, 74" Thick x 17 SF			*1,914*	*2,891*	*0*		*86*	*0*	*1,222.528/CY*	*4,890*
		4.00 CY										
		15.586 Labor hours										
		1.094 Equipment hours										
03 11 13.803.20		*Concrete Stariway Tank Wall, 13'-4" High x 18 LF*										
03 11 13.803		*10" CIP Wall*										
	0500	C.I.P. concrete forms, wall, wood bulkhead with 2 piece keyway, 1 use, includes erecting, bracing, stripping and cleaning	12.00	lf	263	70	-		-	-	27.768 /lf	333

AACE Classification Accuracy Range

Upper Range +50% **Lower Range -30%**

Central Kitsap Treatment Plant Solids Handling

Kitsap County

Detail Report with Contractor Markups

	Item	Description	Takeoff Qty		Labor Amount	Material Amount	Subcontract Amount	Subcontract Name	Equipment Amount	Other Amount	Total Unit Cost	Total Amount
03 11 13.803		*10" CIP Wall*										
	2550	C.I.P. concrete forms, wall, job built, plywood, over 8' to 16' high, 4 use, includes erecting, bracing, stripping and cleaning	479.988	sfca	7,059	817	-		-	-	16.408 /sfca	7,876
	5200	Chamfer strip, wood, 3/4" wide	24.00	lf	45	6	-		-	-	2.121 /lf	51
	1400	Tie cones, plastic, for coil tie system, for CIP wall forms, 1/2" bolt diameter x 1" setback length, includes material only	1.00	c	-	112	-		-	-	111.79 /c	112
n	3010	Waterstop, rubber, center bulb, 1/4" thick x 6" wide_WALLS	30.00	lf	204	387	-		-	-	19.708 /lf	591
	0100	Splice rebar, standard, self-aligning type, taper threaded, #4 bars, includes holding rebar in place while splicing	8.80	ea	160	194	-		-	-	40.247 /ea	354
n	2020	Reinforcing steel, unload and sort, add to base_WALLS	0.80	ton	60	-	-		26	-	108.05 /ton	86
n	2214	Reinforcing steel, crane cost for handling, average, add_WALLS	0.80	ton	66	-	-		28	-	117.463 /ton	94
	0700	Reinforcing steel, in place, walls, #3 to #7, A615, grade 60, incl labor for accessories, excl material for accessories	0.80	ton	1,153	1,995	-		-	-	3,935.31 /ton	3,148
	5100	Structural concrete, placing, walls, pumped, 12" thick, includes leveling (strike off) & consolidation, excludes material	0.80	cy	50	-	-		6	-	69.80 /cy	56
	5100	Structural concrete, placing, walls, pumped, 12" thick, includes leveling (strike off) & consolidation, excludes material	8.00	cy	502	-	-		56	-	69.796 /cy	558
n	0525	Struct WALLS concrete,ready mix,normal wt,4500 psi,includes local aggregate,sand,portland cement and water,delivered, includes all additives	0.80	cy	-	316	-		-	-	395.563 /cy	316
n	0525	Struct WALLS concrete,ready mix,normal wt,4500 psi,includes local aggregate,sand,portland cement and water,delivered, includes all additives	8.00	CY	-	3,164	-		-	-	395.551 /CY	3,164
n	0210	Control joint, clean out control joint of debris_WALLS	12.00	lf	2	-	-			-	0.154 /lf	2
n	0366	Control joint, joint sealant, polyurethane, 1/4" x 1/4" (308 LF/Gal)_WALLS	12.00	lf	41	3	-		-	-	3.724 /lf	45
	0020	Concrete finishing, walls, includes breaking ties and patching voids	479.988	sf	827	33	-		-	-	1.792 /sf	860
	0050	Concrete finishing, walls, burlap rub with grout, includes breaking ties and patching voids	239.994	sf	496	17	-		-	-	2.137 /sf	513
		03 11 13.803 10" CIP Wall			*10,930*	*7,114*			*117*		*2,270.074/CY*	*18,161*
		8.00 CY										
		90.341 Labor hours										
		2.054 Equipment hours										
		03 11 13.803.20 Concrete Stariway Tank Wall, 13'-4" High x 18 LF			*10,930*	*7,114*	*0*		*117*	*0*	*2,270.074/CY*	*18,161*
		8.00 CY										
		90.341 Labor hours										

AACE Classification Accuracy Range

Upper Range +50% **Lower Range -30%**

Central Kitsap Treatment Plant Solids Handling

Kitsap County

Detail Report with Contractor Markups

	Item	Description	Takeoff Qty		Labor Amount	Material Amount	Subcontract Amount	Subcontract Name	Equipment Amount	Other Amount	Total Unit Cost	Total Amount
		03 11 13.803.20 Concrete Stariway Tank Wall, 13'-4" High x 18 LF			*10,930*	*7,114*	*0*		*117*	*0*	*2,270.074/CY*	*18,161*
		8.00 CY										
		90.341 Labor hours										
		2.054 Equipment hours										
03 11 13.803.25		*Concrete Stairway Vault Wall, 18' High x 28 LF*										
03 11 13.803		*10" CIP Wall*										
	0500	C.I.P. concrete forms, wall, wood bulkhead with 2 piece keyway, 1 use, includes erecting, bracing, stripping and cleaning	3.00	lf	66	18	-		-	-	27.773 /lf	83
	2550	C.I.P. concrete forms, wall, job built, plywood, over 8' to 16' high, 4 use, includes erecting, bracing, stripping and cleaning	84.00	sfca	1,235	143	-		-	-	16.408 /sfca	1,378
	5200	Chamfer strip, wood, 3/4" wide	5.00	lf	9	1	-		-	-	2.122 /lf	11
	1400	Tie cones, plastic, for coil tie system, for CIP wall forms, 1/2" bolt diameter x 1" setback length, includes material only	1.00	c	-	112	-		-	-	111.79 /c	112
n	3010	Waterstop, rubber, center bulb, 1/4" thick x 6" wide_WALLS	31.00	lf	211	400	-		-	-	19.708 /lf	611
	0100	Splice rebar, standard, self-aligning type, taper threaded, #4 bars, includes holding rebar in place while splicing	2.20	ea	40	48	-		-	-	40.24 /ea	89
n	2020	Reinforcing steel, unload and sort, add to base_WALLS	0.20	ton	15	-	-		7	-	108.00 /ton	22
n	2214	Reinforcing steel, crane cost for handling, average, add_WALLS	0.20	ton	16	-	-		7	-	117.45 /ton	23
	0700	Reinforcing steel, in place, walls, #3 to #7, A615, grade 60, incl labor for accessories, excl material for accessories	0.20	ton	288	499	-		-	-	3,935.35 /ton	787
	5100	Structural concrete, placing, walls, pumped, 12" thick, includes leveling (strike off) & consolidation, excludes material	2.00	cy	126	-	-		14	-	69.805 /cy	140
	5100	Structural concrete, placing, walls, pumped, 12" thick, includes leveling (strike off) & consolidation, excludes material	0.20	cy	13	-	-		1	-	69.85 /cy	14
n	0525	Struct WALLS concrete,ready mix,normal wt,4500 psi,includes local aggregate,sand,portland cement and water,delivered, includes all additives	0.20	cy	-	79	-		-	-	395.45 /cy	79
n	0525	Struct WALLS concrete,ready mix,normal wt,4500 psi,includes local aggregate,sand,portland cement and water,delivered, includes all additives	2.00	CY	-	791	-		-	-	395.555 /CY	791
n	0210	Control joint, clean out control joint of debris_WALLS	3.00	lf	0	-	-			-	0.15 /lf	0
n	0366	Control joint, joint sealant, polyurethane, 1/4" x 1/4" (308 LF/Gal)_WALLS	3.00	lf	10	1	-		-	-	3.73 /lf	11
	0020	Concrete finishing, walls, includes breaking ties and patching voids	84.00	sf	145	6	-		-	-	1.792 /sf	151

Central Kitsap Treatment Plant Solids Handling

Kitsap County

Detail Report with Contractor Markups

Item		Description	Takeoff Qty		Labor Amount	Material Amount	Subcontract Amount	Subcontract Name	Equipment Amount	Other Amount	Total Unit Cost	Total Amount
03 11 13.803		*10" CIP Wall*										
	0050	Concrete finishing, walls, burlap rub with grout, includes breaking ties and patching voids	42.00	sf	87	3	-		-	-	2.137 /sf	90
		03 11 13.803 10" CIP Wall			*2,262*	*2,100*			*29*		*2,195.675/CY*	*4,391*
		2.00 CY										
		18.639 Labor hours										
		0.513 Equipment hours										
		03 11 13.803.25 Concrete Stairway Vault Wall, 18' High x 28 LF			*2,262*	*2,100*	*0*		*29*	*0*	*2,195.675/CY*	*4,391*
		2.00 CY										
		18.639 Labor hours										
		0.513 Equipment hours										
03 11 13.804.60		*Centre BLDG Concrete Interior Wall, 12' High X 144 LF*										
03 11 13.804		*12" CIP Wall*										
	0500	C.I.P. concrete forms, wall, wood bulkhead with 2 piece keyway, 1 use, includes erecting, bracing, stripping and cleaning	87.00	lf	1,907	509	-		-	-	27.767 /lf	2,416
	2550	C.I.P. concrete forms, wall, job built, plywood, over 8' to 16' high, 4 use, includes erecting, bracing, stripping and cleaning	3,456.00	sfca	50,823	5,884	-		-	-	16.408 /sfca	56,707
	5200	Chamfer strip, wood, 3/4" wide	173.00	lf	325	42	-		-	-	2.122 /lf	367
	1400	Tie cones, plastic, for coil tie system, for CIP wall forms, 1/2" bolt diameter x 1" setback length, includes material only	3.00	c	-	335	-		-	-	111.787 /c	335
n	3010	Waterstop, rubber, center bulb, 1/4" thick x 6" wide_WALLS	231.00	lf	1,573	2,980	-		-	-	19.708 /lf	4,553
	0100	Splice rebar, standard, self-aligning type, taper threaded, #4 bars, includes holding rebar in place while splicing	70.40	ea	1,284	1,550	-		-	-	40.247 /ea	2,833
n	2020	Reinforcing steel, unload and sort, add to base_WALLS	6.40	ton	482	-	-		210	-	108.052 /ton	692
n	2214	Reinforcing steel, crane cost for handling, average, add_WALLS	6.40	ton	524	-	-		228	-	117.45 /ton	752
	0700	Reinforcing steel, in place, walls, #3 to #7, A615, grade 60, incl labor for accessories, excl material for accessories	6.40	ton	9,226	15,960	-		-	-	3,935.284 /ton	25,186
	5100	Structural concrete, placing, walls, pumped, 12" thick, includes leveling (strike off) & consolidation, excludes material	6.40	cy	402	-	-		45	-	69.80 /cy	447
	5100	Structural concrete, placing, walls, pumped, 12" thick, includes leveling (strike off) & consolidation, excludes material	64.00	cy	4,016	-	-		451	-	69.798 /cy	4,467
n	0525	Struct WALLS concrete,ready mix,normal wt,4500 psi,includes local aggregate,sand,portland cement and water,delivered, includes all additives	6.40	cy	-	2,532	-		-	-	395.553 /cy	2,532

Central Kitsap Treatment Plant Solids Handling

Kitsap County

Detail Report with Contractor Markups

Item		Description	Takeoff Qty		Labor Amount	Material Amount	Subcontract Amount	Name	Equipment Amount	Other Amount	Total Unit Cost	Total Amount
03 11 13.804		*12" CIP Wall*										
n	0525	Struct WALLS concrete,ready mix,normal wt,4500 psi,includes local aggregate,sand,portland cement and water,delivered, includes all additives	64.00	CY	-	25,315	-		-	-	395.551 /CY	25,315
n	0210	Control joint, clean out control joint of debris_WALLS	87.00	lf	13	-	-			-	0.155 /lf	13
n	0366	Control joint, joint sealant, polyurethane, 1/4" x 1/4" (308 LF/Gal)_WALLS	87.00	lf	300	24	-		-	-	3.722 /lf	324
	0020	Concrete finishing, walls, includes breaking ties and patching voids	3,456.00	sf	5,957	238	-		-	-	1.792 /sf	6,194
	0050	Concrete finishing, walls, burlap rub with grout, includes breaking ties and patching voids	1,728.00	sf	3,574	119	-		-	-	2.137 /sf	3,693
		03 11 13.804 12" CIP Wall			*80,406*	*55,486*			*933*		*2,137.896/CY*	*136,825*
		64.00 CY										
		664.285 Labor hours										
		16.429 Equipment hours										
		03 11 13.804.60 Centre BLDG Concrete Interior Wall, 12' High X 144 LF			*80,406*	*55,486*	*0*		*933*	*0*	*2,137.896/CY*	*136,825*
		64.00 CY										
		664.285 Labor hours										
		16.429 Equipment hours										
		DIVISION 03 CONCRETE			**144,705**	**126,853**	**0**		**3,995**	**0**	**1,651.083/CY**	**275,552**
		166.892 CY										
		1,195.481 Labor hours										
		68.589 Equipment hours										

DIVISION 05 METALS

05 50 00.450.05 Centrate Building - Ladder x 17 LF

05 50 00.450		*Metal Ladders - Aluminum*										
	0020	Ladder, shop fabricated, steel, 20" W, bolted to concrete, incl cage	17.00	LF	1,668	4,085	-		97	-	344.144 /LF	5,850
		05 50 00.450 Metal Ladders - Aluminum			*1,668*	*4,085*			*97*		*344.144/LF*	*5,850*
		17.00 LF										
		10.88 Labor hours										
		2.72 Equipment hours										
		05 50 00.450.05 Centrate Building - Ladder x 17 LF			*1,668*	*4,085*	*0*		*97*	*0*	*344.144/LF*	*5,850*
		17.00 LF										
		10.88 Labor hours										
		2.72 Equipment hours										

Central Kitsap Treatment Plant Solids Handling

Kitsap County

Detail Report with Contractor Markups

Item	Description	Takeoff Qty		Labor Amount	Material Amount	Subcontract Amount	Subcontract Name	Equipment Amount	Other Amount	Total Unit Cost	Total Amount
	DIVISION 05 METALS			**1,668**	**4,085**	**0**		**97**	**0**	**5,850.45 /LS**	**5,850**
	1.00 LS										
	10.88 Labor hours										
	2.72 Equipment hours										
DIVISION 07	**THERMAL, MOISTURE PROTECTION**										
07 61 13.000.05	*Steel Roof Cover - Centre Tank x 2,219 SF*										
07 61 13.000	*Metal Roofing*										
0800	Aluminum coping, stock units, for 12" wall, excludes scaffolding	217.00	lf	5,364	987	-		-	-	29.269 /lf	6,351
0600	Open web bar joist, K Series, 40-ton job lots, 24K10, 13.1 plf, 30' to 50' spans, shop fabricated, incl shop primer, horizontal bridging	659.54	lf	3,635	15,330	-		1,155	-	30.507 /lf	20,120
2600	Metal roof decking, steel, open type B wide rib, galvanized, under 50 Sq, 1-1/2" D, 20 gauge	2,219.00	SF	2,817	12,326	-		163	-	6.898 /SF	15,307
2780	2" x 8" miscellaneous wood blocking, to steel construction, per M.B.F.	0.217	mbf	1,141	460	-		-	-	7,377.74 /mbf	1,601
0030	Underlayment, plywood, underlayment grade, 3/8" thick	2,219.00	sf	3,268	9,004	-		-	-	5.531 /sf	12,272
1725	Polyisocyanurate insulation, for roof decks, 2" thick, 2#/CF density, fastening excluded	2,219.00	sf	1,527	3,278	-		-	-	2.165 /sf	4,805
1745	Polyisocyanurate insulation, for roof decks, 3" thick, 2#/CF density, fastening excluded	2,219.00	sf	1,679	4,896	-		-	-	2.963 /sf	6,575
0825	Asphalt shingles, #30 felt underlayment	22.00	sq	373	377	-		-	-	34.101 /sq	750
4800	Ethylene-propylene-diene-monomer roofing, (EPDM), 0.40 psf, fully adhered with adhesive, 60 mils	22.00	sq	3,785	5,287	-		316	-	426.737 /sq	9,388
0100	Sheet metal flashing, aluminum, flexible, mill finish, .032" thick, including up to 4 bends	377.00	sf	2,558	3,149	-		-	-	15.137 /sf	5,707
	07 61 13.000 Metal Roofing			*26,149*	*55,094*			*1,634*		*37.349/SF*	*82,877*
	2,219.00 SF										
	201.441 Labor hours										
	18.557 Equipment hours										
	07 61 13.000.05 Steel Roof Cover - Centre Tank x 2,219 SF			*26,149*	*55,094*	*0*		*1,634*	*0*	*37.349/SF*	*82,877*
	2,219.00 SF										
	201.441 Labor hours										
	18.557 Equipment hours										
07 72 33.000.15	*Roof Hatch, 4' x 4'*										
07 72 33.000	*Roof Hatches*										

Central Kitsap Treatment Plant Solids Handling

Kitsap County

Detail Report with Contractor Markups

Item		Description	Takeoff Qty		Labor Amount	Material Amount	Subcontract Amount	Subcontract Name	Equipment Amount	Other Amount	Total Unit Cost	Total Amount
07 72 33.000		*Roof Hatches*										
n	1120	Roof Hatches, with curb, 1" fiberglass insulation, galvanized steel curb and aluminum cover, 4' x 4'	1.00	EA	553	3,546	-		-	-	4,098.82 /EA	4,099
		07 72 33.000 Roof Hatches			*553*	*3,546*					*4,098.82 /EA*	*4,099*
		1.00 EA										
		4.00 Labor hours										
		07 72 33.000.15 Roof Hatch, 4' x 4'			*553*	*3,546*	*0*		*0*	*0*	*4,098.82 /EA*	*4,099*
		1.00 EA										
		4.00 Labor hours										
		DIVISION 07 THERMAL, MOISTURE PROTECTION			**26,702**	**58,639**	**0**		**1,634**	**0**	**39.196/SF**	**86,976**
		2,219.00 SF										
		205.441 Labor hours										
		18.557 Equipment hours										
DIVISION 31		**EARTHWORK**										
31.23.10.P005		*Excavation, Backfill, and Haul Off-Site*										
31 23 10.000		*Excavation, Backfill, and Haul Off-Site*										
n	6260	Strt excvt for minor strtr,bank measr,for sprd and mat ftngs,elvtr pits,and small bldng fndtn,sandy clay loam,2 cy bucket,machin excvtn,hydrlc backhoe	1,755.00	CY	16,317	-	-		13,730	-	17.121 /CY	30,047
	4010	Backfill, structural, sandy clay & loam, 200 H.P. dozer, 50' haul, from existing stockpile, excludes compaction	335.00	CY	211	-	-		368	-	1.726 /CY	578
	4060	Borrow, common earth, 1-1/2 C.Y. bucket, loading and/or spreading, front end loader, wheel-mounted	335.00	CY	529	4,877	-		260	-	16.912 /CY	5,666
n	0560	Hauling,excavated borrow material,loose cubic yards,20 mile round trip,0.4 load/hr,base wide rate,12 cy truck,highway haulers,excludes loading	1,770.00	CY	44,575	-	-		46,188	-	51.279 /CY	90,764
	0400	Compaction, structural, select fill, 8" lifts, sheepsfoot or wobbly wheel roller	335.00	CY	342	-	-		535	-	2.617 /CY	877
		31 23 10.000 Excavation, Backfill, and Haul Off-Site			*61,973*	*4,877*			*61,081*		*28.241/CY*	*127,931*
		4,530.00 CY										
		501.555 Labor hours										
		433.730 Equipment hours										
		31.23.10.P005 Excavation, Backfill, and Haul Off-Site			*61,973*	*4,877*	*0*		*61,081*	*0*	*28.241/CY*	*127,931*
		4,530.00 CY										
		501.555 Labor hours										

AACE Classification Accuracy Range

Upper Range +50% **Lower Range -30%**

Central Kitsap Treatment Plant Solids Handling

Kitsap County

Detail Report with Contractor Markups

Item		Description	Takeoff Qty		Labor Amount	Material Amount	Subcontract Amount	Name	Equipment Amount	Other Amount	Total Unit Cost	Total Amount
		31.23.10.P005 Excavation, Backfill, and Haul Off-Site			*61,973*	*4,877*	*0*		*61,081*	*0*	*28.241/CY*	*127,931*
		4,530.00 CY										
		501.555 Labor hours										
		433.730 Equipment hours										
31.23.19.P030		*Well Point Detwatering - 8 Months*										
31 23 19.020		*Dewatering - Wellpoint*										
n	1300	Wellpoints,complete installation,2"wellpoints,5'oc, 500'long header,8"diameter,includes one month operation,equipment rental,fuel and removal system	500.00	hdr	198,030	49,134	-		-	-	494.329 /hdr	247,164
	1400	Wellpoints, each additional month, 2" wellpoints, 5' O.C., 500' long header, 8" diameter, includes operation, equipment rental, and fuel	3,500.00	hdr	704,707	245,216	-		-	-	271.407 /hdr	949,923
		31 23 19.020 Dewatering - Wellpoint			*902,737*	*294,350*					*149,635.899/MO*	*1,197,087*
		8.00 MO										
		6,861.463 Labor hours										
		31.23.19.P030 Well Point Detwatering - 8 Months			*902,737*	*294,350*	*0*		*0*	*0*	*149,635.899/MO*	*1,197,087*
		8.00 MO										
		6,861.463 Labor hours										
		DIVISION 31 EARTHWORK			**964,710**	**299,227**	**0**		**61,081**	**0**	**292.499/CY**	**1,325,018**
		4,530.00 CY										
		7,363.018 Labor hours										
		433.730 Equipment hours										
DIVISION 46		**WATER AND WASTEWATER EQUIPMENT**										
46 13 01.005.05		*Fabricated Aluminum Tank Covers, 2,219 SF*										
46 13 01.005		*Aluminum Covers: Flat*										
	0105	Aluminum Tank Covers	2,219.00	SF			522,503			-	235.468 /SF	522,503
		46 13 01.005 Aluminum Covers: Flat					*522,503*				*235.468/SF*	*522,503*
		2,219.00 SF										
		46 13 01.005.05 Fabricated Aluminum Tank Covers, 2,219 SF			*0*	*0*	*522,503*		*0*	*0*	*235.468/SF*	*522,503*
		2,219.00 SF										

AACE Classification Accuracy Range

Upper Range +50% **Lower Range -30%**

Central Kitsap Treatment Plant Solids Handling

Kitsap County

Detail Report with Contractor Markups

Item	Description	Takeoff Qty	Labor Amount	Material Amount	Subcontract Amount	Subcontract Name	Equipment Amount	Other Amount	Total Unit Cost	Total Amount
	DIVISION 46 WATER AND WASTEWATER EQUIPMENT		**0**	**0**	**522,503**		**0**	**0**	**522,503.31 /EA**	**522,503**
	1.00 EA									
	500 CENTRATE STORAGE - EXISTING GRAV THICKENER		***1,137,785***	***488,805***	***522,503***		***66,807***	***0***	***2,215,900.27 /LS***	***2,215,900***
	1.00 LS									
	8,774.821 Labor hours									
	523.596 Equipment hours									

546 EXISTING SOLIDS PROCESSING BUILDING

DIVISION 46 — WATER AND WASTEWATER EQUIPMENT

43.23.50.010 — Centrate pumps 1, 2

Item	Description	Takeoff Qty	Labor Amount	Material Amount	Subcontract Amount	Subcontract Name	Equipment Amount	Other Amount	Total Unit Cost	Total Amount
43 23 50.000	*Pumping Equipment - Centrate*									
n 00160037007	Centrifugal pump 250 gpm	2.00 EA	5,715	75,671	-		2,727	-	42,056.24 /EA	84,112
	43 23 50.000 Pumping Equipment - Centrate		*5,715*	*75,671*			*2,727*		*42,056.24 /EA*	*84,112*
	2.00 EA									
	48.00 Labor hours									
	16.00 Equipment hours									
	43.23.50.010 Centrate pumps 1, 2		*5,715*	*75,671*	*0*		*2,727*	*0*	*42,056.24 /EA*	*84,112*
	2.00 EA									
	48.00 Labor hours									
	16.00 Equipment hours									

43.23.50.012 — Centrate overflow pumps 1, 2

Item	Description	Takeoff Qty	Labor Amount	Material Amount	Subcontract Amount	Subcontract Name	Equipment Amount	Other Amount	Total Unit Cost	Total Amount
43 23 50.000	*Pumping Equipment - Centrate*									
n 00160037007	Centrifugal pump 150 gpm	2.00 EA	5,715	51,594	-		2,727	-	30,017.715 /EA	60,035
	43 23 50.000 Pumping Equipment - Centrate		*5,715*	*51,594*			*2,727*		*30,017.715/EA*	*60,035*
	2.00 EA									
	48.00 Labor hours									
	16.00 Equipment hours									
	43.23.50.012 Centrate overflow pumps 1, 2		*5,715*	*51,594*	*0*		*2,727*	*0*	*30,017.715/EA*	*60,035*
	2.00 EA									
	48.00 Labor hours									

AACE Classification Accuracy Range

Upper Range +50% **Lower Range -30%**

Central Kitsap Treatment Plant Solids Handling

Kitsap County

Detail Report with Contractor Markups

Item	Description	Takeoff Qty	Labor Amount	Material Amount	Subcontract Amount	Subcontract Name	Equipment Amount	Other Amount	Total Unit Cost	Total Amount
	43.23.50.012 Centrate overflow pumps 1, 2		*5,715*	*51,594*	*0*		*2,727*	*0*	*30,017.715/EA*	*60,035*
	2.00 EA									
	48.00 Labor hours									
	16.00 Equipment hours									
	DIVISION 46 WATER AND WASTEWATER EQUIPMENT		**11,429**	**127,264**	**0**		**5,454**	**0**	**36,036.978/EA**	**144,148**
	4.00 EA									
	96.00 Labor hours									
	32.00 Equipment hours									
	546 EXISTING SOLIDS PROCESSING BUILDING		***11,429***	***127,264***	***0***		***5,454***	***0***	***144,147.91 /LS***	***144,148***
	1.00 LS									
	96.00 Labor hours									
	32.00 Equipment hours									

547 PRIMARY SLUDGE & SEPTAGE BUILDING

DIVISION 03 CONCRETE

03 11 13.303.15 Elevated Roof Slab, 12" Thick x 5,258 SF

03 11 13.303		*12" Elevated Slab*									
	3050	C.I.P. concrete forms, slab on grade, edge, wood, 7" to 12" high, 4 use, includes erecting, bracing, stripping and cleaning	290.048	sfca	2,514	609	-	-	-	10.767 /sfca	3,123
n	9015	C.I.P. concrete forms, bulkhead for slab on grade w/ keyway, up to 12", exp metal, includes erecting, bracing, stripping and cleaning	262.900	sfca	1,358	203	-	-	-	5.938 /sfca	1,561
n	2050	Reinforcing steel, unload and sort, add to base_SLAB ON GRADE	17.063	ton	1,285	-	-	559	-	108.053 /ton	1,844
	0600	Reinforcing steel, in place, slab on grade, #3 to #7, A615, grade 60, incl labor for accessories, excl material for accessories	17.063	ton	32,084	42,550	-	-	-	4,374.032 /ton	74,634
	2220	Reinforcing steel, crane cost for handling, 90 picks/day, up to 0.5 Ton/day	17.063	ton	3,671	-	-	1,596	-	308.717 /ton	5,268
	4650	Structural concrete, placing, slab on grade, pumped, over 6" thick, includes leveling (strike off) & consolidation, excludes material	19.50	cy	728	-	-	82	-	41.502 /cy	809
	4650	Structural concrete, placing, slab on grade, pumped, over 6" thick, includes leveling (strike off) & consolidation, excludes material	195.00	cy	7,276	-	-	817	-	41.502 /cy	8,093

Central Kitsap Treatment Plant Solids Handling

Kitsap County

Detail Report with Contractor Markups

Item		Description	Takeoff Qty		Labor Amount	Material Amount	Subcontract Amount	Subcontract Name	Equipment Amount	Other Amount	Total Unit Cost	Total Amount
03 11 13.303		*12" Elevated Slab*										
n	0725	Struct SLAB ON GRADE concrete,ready mix,normal wt,4500 psi,includes local aggregate,sand,portland cement and water,delivered, includes all additives	195.00	CY	-	77,132	-		-	-	395.551 /CY	77,132
n	0725	Struct SLAB ON GRADE concrete,ready mix,normal wt,4500 psi,includes local aggregate,sand,portland cement and water,delivered, includes all additives	19.50	cy	-	7,713	-		-	-	395.55 /cy	7,713
n	0255	Concrete finishing, floors, manual screed, bull float, machine float & steel trowel (walk-behind)_SOG	5,257.99	sf	8,183	-	-		445	-	1.641 /sf	8,628
n	0122	Control joint, concrete floor slab, sawcut in green concrete, 1" depth_SOG	262.900	lf	245	14	-		24	-	1.076 /lf	283
n	0215	Control joint, clean out control joint of debris_SOG	262.900	lf	41	-	-			-	0.155 /lf	41
n	0367	Control joint, joint sealant, polyurethane, 1/4" x 1/4" (308 LF/Gal)_SOG	525.799	lf	1,813	145	-		-	-	3.722 /lf	1,957
n	0310	Concrete surface treatment, curing, sprayed membrane compound_SOG	52.58	csf	895	674	-		-	-	29.835 /csf	1,569
	1200	Vapor retarders, building paper, polyethylene vapor barrier, standard, 10 mil (.010" thick)	52.58	sq	1,403	737	-		-	-	40.704 /sq	2,140
n	1310	Fill, gravel fill, compacted, under floor slabs, alternate pricing method, 12" deep_SOG	224.00	ecy	5,204	12,327	-		435	-	80.204 /ecy	17,966
n	1136	Hauling, excavated borrow material, loose cubic yards, 20 mile round trip, 0.4 loads/hour, 16.5 c.y. dump trailer, highway haulers, excludes loading	224.00	lcy	3,890	-	-		4,364	-	36.849 /lcy	8,254
		03 11 13.303 12" Elevated Slab			*70,589*	*142,104*			*8,322*		*1,133.411/CY*	*221,015*
		195.00 CY										
		575.191 Labor hours										
		133.162 Equipment hours										
		03 11 13.303.15 Elevated Roof Slab, 12" Thick x 5,258 SF			*70,589*	*142,104*	*0*		*8,322*	*0*	*1,133.411/CY*	*221,015*
		195.00 CY										
		575.191 Labor hours										
		133.162 Equipment hours										
03 11 13.504.05		*1st Floor Slab, 12" Thick x 5,258 SF*										
03 11 13.504		*12" Slab on Grade*										
	3050	C.I.P. concrete forms, slab on grade, edge, wood, 7" to 12" high, 4 use, includes erecting, bracing, stripping and cleaning	290.048	sfca	2,514	609	-		-	-	10.767 /sfca	3,123
n	9015	C.I.P. concrete forms, bulkhead for slab on grade w/ keyway, up to 12", exp metal, includes erecting, bracing, stripping and cleaning	262.900	sfca	1,358	203	-		-	-	5.938 /sfca	1,561
n	2050	Reinforcing steel, unload and sort, add to base_SLAB ON GRADE	17.063	ton	1,285	-	-		559	-	108.052 /ton	1,844

Central Kitsap Treatment Plant Solids Handling

Kitsap County

Detail Report with Contractor Markups

	Item	Description	Takeoff Qty		Labor Amount	Material Amount	Subcontract Amount	Subcontract Name	Equipment Amount	Other Amount	Total Unit Cost	Total Amount
03 11 13.504		*12" Slab on Grade*										
	0600	Reinforcing steel, in place, slab on grade, #3 to #7, A615, grade 60, incl labor for accessories, excl material for accessories	17.063	ton	32,084	42,550	-		-	-	4,374.033 /ton	74,634
	2220	Reinforcing steel, crane cost for handling, 90 picks/day, up to 0.5 Ton/day	17.063	ton	3,671	-	-		1,596	-	308.717 /ton	5,268
	4650	Structural concrete, placing, slab on grade, pumped, over 6" thick, includes leveling (strike off) & consolidation, excludes material	19.50	cy	728	-	-		82	-	41.503 /cy	809
	4650	Structural concrete, placing, slab on grade, pumped, over 6" thick, includes leveling (strike off) & consolidation, excludes material	195.00	cy	7,276	-	-		817	-	41.502 /cy	8,093
n	0725	Struct SLAB ON GRADE concrete,ready mix,normal wt,4500 psi,includes local aggregate,sand,portland cement and water,delivered, includes all additives	19.50	cy	-	7,713	-		-	-	395.551 /cy	7,713
n	0725	Struct SLAB ON GRADE concrete,ready mix,normal wt,4500 psi,includes local aggregate,sand,portland cement and water,delivered, includes all additives	195.00	CY	-	77,132	-		-	-	395.551 /CY	77,132
n	0255	Concrete finishing, floors, manual screed, bull float, machine float & steel trowel (walk-behind)_SOG	5,257.99	sf	8,184	-	-		445	-	1.641 /sf	8,628
n	0122	Control joint, concrete floor slab, sawcut in green concrete, 1" depth_SOG	262.900	lf	245	14	-		24	-	1.076 /lf	283
n	0215	Control joint, clean out control joint of debris_SOG	262.900	lf	41	-	-			-	0.155 /lf	41
n	0367	Control joint, joint sealant, polyurethane, 1/4" x 1/4" (308 LF/Gal)_SOG	525.799	lf	1,813	145	-		-	-	3.722 /lf	1,957
n	0310	Concrete surface treatment, curing, sprayed membrane compound_SOG	52.58	csf	895	674	-		-	-	29.834 /csf	1,569
	1200	Vapor retarders, building paper, polyethylene vapor barrier, standard, 10 mil (.010" thick)	52.58	sq	1,403	737	-		-	-	40.704 /sq	2,140
n	1310	Fill, gravel fill, compacted, under floor slabs, alternate pricing method, 12" deep_SOG	224.00	ecy	5,204	12,327	-		435	-	80.204 /ecy	17,966
n	1136	Hauling, excavated borrow material, loose cubic yards, 20 mile round trip, 0.4 loads/hour, 16.5 c.y. dump trailer, highway haulers, excludes loading	224.00	lcy	3,890	-	-		4,364	-	36.849 /lcy	8,254
		03 11 13.504 12" Slab on Grade			*70,589*	*142,104*			*8,322*		*1,133.411/CY*	*221,015*
		195.00 CY										
		575.191 Labor hours										
		133.162 Equipment hours										
		03 11 13.504.05 1st Floor Slab, 12" Thick x 5,258 SF			*70,589*	*142,104*	*0*		*8,322*	*0*	*1,133.411/CY*	*221,015*
		195.00 CY										
		575.191 Labor hours										
		133.162 Equipment hours										
03 11 13.504.10		*Buried Slab, 12" Thick x 1,589 SF*										

Central Kitsap Treatment Plant Solids Handling

Kitsap County

Detail Report with Contractor Markups

	Item	Description	Takeoff Qty		Labor Amount	Material Amount	Subcontract Amount	Subcontract Name	Equipment Amount	Other Amount	Total Unit Cost	Total Amount
03 11 13.504		*12" Slab on Grade*										
	3050	C.I.P. concrete forms, slab on grade, edge, wood, 7" to 12" high, 4 use, includes erecting, bracing, stripping and cleaning	157.448	sfca	1,365	330	-		-	-	10.767 /sfca	1,695
n	9015	C.I.P. concrete forms, bulkhead for slab on grade w/ keyway, up to 12", exp metal, includes erecting, bracing, stripping and cleaning	77.456	sfca	400	60	-		-	-	5.938 /sfca	460
n	2050	Reinforcing steel, unload and sort, add to base_SLAB ON GRADE	5.075	ton	382	-	-		166	-	108.055 /ton	548
	0600	Reinforcing steel, in place, slab on grade, #3 to #7, A615, grade 60, incl labor for accessories, excl material for accessories	5.075	ton	9,543	12,655	-		-	-	4,374.034 /ton	22,198
	2220	Reinforcing steel, crane cost for handling, 90 picks/day, up to 0.5 Ton/day	5.075	ton	1,092	-	-		475	-	308.715 /ton	1,567
	4650	Structural concrete, placing, slab on grade, pumped, over 6" thick, includes leveling (strike off) & consolidation, excludes material	5.80	cy	216	-	-		24	-	41.502 /cy	241
	4650	Structural concrete, placing, slab on grade, pumped, over 6" thick, includes leveling (strike off) & consolidation, excludes material	58.00	cy	2,164	-	-		243	-	41.502 /cy	2,407
n	0725	Struct SLAB ON GRADE concrete,ready mix,normal wt,4500 psi,includes local aggregate,sand,portland cement and water,delivered, includes all additives	5.80	cy	-	2,294	-		-	-	395.553 /cy	2,294
n	0725	Struct SLAB ON GRADE concrete,ready mix,normal wt,4500 psi,includes local aggregate,sand,portland cement and water,delivered, includes all additives	58.00	CY	-	22,942	-		-	-	395.551 /CY	22,942
n	0255	Concrete finishing, floors, manual screed, bull float, machine float & steel trowel (walk-behind)_SOG	1,549.117	sf	2,411	-	-		131	-	1.641 /sf	2,542
n	0122	Control joint, concrete floor slab, sawcut in green concrete, 1" depth_SOG	77.456	lf	72	4	-		7	-	1.075 /lf	83
n	0215	Control joint, clean out control joint of debris_SOG	77.456	lf	12	-	-			-	0.155 /lf	12
n	0367	Control joint, joint sealant, polyurethane, 1/4" x 1/4" (308 LF/Gal)_SOG	154.912	lf	534	43	-		-	-	3.722 /lf	577
n	0310	Concrete surface treatment, curing, sprayed membrane compound_SOG	15.491	csf	264	198	-		-	-	29.833 /csf	462
	1200	Vapor retarders, building paper, polyethylene vapor barrier, standard, 10 mil (.010" thick)	15.491	sq	413	217	-		-	-	40.706 /sq	631
n	1310	Fill, gravel fill, compacted, under floor slabs, alternate pricing method, 12" deep_SOG	66.00	ecy	1,533	3,632	-		128	-	80.203 /ecy	5,293
n	1136	Hauling, excavated borrow material, loose cubic yards, 20 mile round trip, 0.4 loads/hour, 16.5 c.y. dump trailer, highway haulers, excludes loading	66.00	lcy	1,146	-	-		1,286	-	36.849 /lcy	2,432
		03 11 13.504 12" Slab on Grade			*21,548*	*42,376*			*2,460*		*1,144.563/CY*	*66,385*

58.00 CY

175.740 Labor hours
39.327 Equipment hours

AACE Classification Accuracy Range

Upper Range +50% **Lower Range -30%**

Central Kitsap Treatment Plant Solids Handling

Kitsap County

Detail Report with Contractor Markups

Item		Description	Takeoff Qty		Labor Amount	Material Amount	Subcontract Amount	Subcontract Name	Equipment Amount	Other Amount	Total Unit Cost	Total Amount
		03 11 13.504.10 Buried Slab, 12" Thick x 1,589 SF			*21,548*	*42,376*	*0*		*2,460*	*0*	*1,144.563/CY*	*66,385*
		58.00 CY										
		175.740 Labor hours										
		39.327 Equipment hours										
03 11 13.804.20		*Concrete Wall, 16' High x 12" Thick x 397 LF*										
03 11 13.804		*12" CIP Wall*										
	0500	C.I.P. concrete forms, wall, wood bulkhead with 2 piece keyway, 1 use, includes erecting, bracing, stripping and cleaning	318.00	lf	6,971	1,859	-		-	-	27.767 /lf	8,830
	2550	C.I.P. concrete forms, wall, job built, plywood, over 8' to 16' high, 4 use, includes erecting, bracing, stripping and cleaning	12,704.00	sfca	186,823	21,630	-		-	-	16.408 /sfca	208,452
	5200	Chamfer strip, wood, 3/4" wide	636.00	lf	1,196	153	-		-	-	2.122 /lf	1,349
	1400	Tie cones, plastic, for coil tie system, for CIP wall forms, 1/2" bolt diameter x 1" setback length, includes material only	11.00	c	-	1,230	-		-	-	111.785 /c	1,230
n	3010	Waterstop, rubber, center bulb, 1/4" thick x 6" wide_WALLS	715.00	lf	4,869	9,222	-		-	-	19.708 /lf	14,091
	0100	Splice rebar, standard, self-aligning type, taper threaded, #4 bars, includes holding rebar in place while splicing	259.600	ea	4,733	5,715	-		-	-	40.247 /ea	10,448
n	2020	Reinforcing steel, unload and sort, add to base_WALLS	23.60	ton	1,777	-	-		773	-	108.051 /ton	2,550
n	2214	Reinforcing steel, crane cost for handling, average, add_WALLS	23.60	ton	1,932	-	-		840	-	117.449 /ton	2,772
	0700	Reinforcing steel, in place, walls, #3 to #7, A615, grade 60, incl labor for accessories, excl material for accessories	23.60	ton	34,022	58,851	-		-	-	3,935.287 /ton	92,873
	5100	Structural concrete, placing, walls, pumped, 12" thick, includes leveling (strike off) & consolidation, excludes material	23.60	cy	1,481	-	-		166	-	69.798 /cy	1,647
	5100	Structural concrete, placing, walls, pumped, 12" thick, includes leveling (strike off) & consolidation, excludes material	236.00	cy	14,810	-	-		1,663	-	69.798 /cy	16,472
n	0525	Struct WALLS concrete,ready mix,normal wt,4500 psi,includes local aggregate,sand,portland cement and water,delivered, includes all additives	23.60	cy	-	9,335	-		-	-	395.551 /cy	9,335
n	0525	Struct WALLS concrete,ready mix,normal wt,4500 psi,includes local aggregate,sand,portland cement and water,delivered, includes all additives	236.00	CY	-	93,350	-		-	-	395.551 /CY	93,350
n	0210	Control joint, clean out control joint of debris_WALLS	318.00	lf	49	-	-			-	0.155 /lf	49
n	0366	Control joint, joint sealant, polyurethane, 1/4" x 1/4" (308 LF/Gal)_WALLS	318.00	lf	1,096	87	-		-	-	3.722 /lf	1,184
	0020	Concrete finishing, walls, includes breaking ties and patching voids	12,704.00	sf	21,896	874	-		-	-	1.792 /sf	22,770

Central Kitsap Treatment Plant Solids Handling

Kitsap County

Detail Report with Contractor Markups

	Item	Description	Takeoff Qty		Labor Amount	Material Amount	Subcontract Amount	Subcontract Name	Equipment Amount	Other Amount	Total Unit Cost	Total Amount
03 11 13.804		*12" CIP Wall*										
	0050	Concrete finishing, walls, burlap rub with grout, includes breaking ties and patching voids	6,352.00	sf	13,137	437	-		-	-	2.137 /sf	13,574
		03 11 13.804 12" CIP Wall			*294,791*	*202,743*			*3,442*		*2,122.782/CY*	*500,977*
		236.00 CY										
		2,435.569 Labor hours										
		60.580 Equipment hours										
		03 11 13.804.20 Concrete Wall, 16' High x 12" Thick x 397 LF			*294,791*	*202,743*	*0*		*3,442*	*0*	*2,122.782/CY*	*500,977*
		236.00 CY										
		2,435.569 Labor hours										
		60.580 Equipment hours										
03 11 13.804.25		*Grade Wall, 1' High x 12" Thick x 397 LF*										
03 11 13.804		*12" CIP Wall*										
	0500	C.I.P. concrete forms, wall, wood bulkhead with 2 piece keyway, 1 use, includes erecting, bracing, stripping and cleaning	20.00	lf	438	117	-		-	-	27.768 /lf	555
	2550	C.I.P. concrete forms, wall, job built, plywood, over 8' to 16' high, 4 use, includes erecting, bracing, stripping and cleaning	794.00	sfca	11,676	1,352	-		-	-	16.408 /sfca	13,028
	5200	Chamfer strip, wood, 3/4" wide	40.00	lf	75	10	-		-	-	2.122 /lf	85
	1400	Tie cones, plastic, for coil tie system, for CIP wall forms, 1/2" bolt diameter x 1" setback length, includes material only	1.00	c	-	112	-		-	-	111.79 /c	112
n	3010	Waterstop, rubber, center bulb, 1/4" thick x 6" wide_WALLS	417.00	lf	2,840	5,379	-		-	-	19.708 /lf	8,218
	0100	Splice rebar, standard, self-aligning type, taper threaded, #4 bars, includes holding rebar in place while splicing	16.50	ea	301	363	-		-	-	40.248 /ea	664
n	2020	Reinforcing steel, unload and sort, add to base_WALLS	1.50	ton	113	-	-		49	-	108.04 /ton	162
n	2214	Reinforcing steel, crane cost for handling, average, add_WALLS	1.50	ton	123	-	-		53	-	117.433 /ton	176
	0700	Reinforcing steel, in place, walls, #3 to #7, A615, grade 60, incl labor for accessories, excl material for accessories	1.50	ton	2,162	3,741	-		-	-	3,935.30 /ton	5,903
	5100	Structural concrete, placing, walls, pumped, 12" thick, includes leveling (strike off) & consolidation, excludes material	1.50	cy	94	-	-		11	-	69.78 /cy	105
	5100	Structural concrete, placing, walls, pumped, 12" thick, includes leveling (strike off) & consolidation, excludes material	15.00	cy	941	-	-		106	-	69.799 /cy	1,047
n	0525	Struct WALLS concrete,ready mix,normal wt,4500 psi,includes local aggregate,sand,portland cement and water,delivered, includes all additives	1.50	cy	-	593	-		-	-	395.553 /cy	593

Central Kitsap Treatment Plant Solids Handling

Kitsap County

Detail Report with Contractor Markups

Item		Description	Takeoff Qty		Labor Amount	Material Amount	Subcontract Amount	Subcontract Name	Equipment Amount	Other Amount	Total Unit Cost	Total Amount
03 11 13.804		*12" CIP Wall*										
n	0525	Struct WALLS concrete,ready mix,normal wt,4500 psi,includes local aggregate,sand,portland cement and water,delivered, includes all additives	15.00	CY	-	5,933	-		-	-	395.551 /CY	5,933
n	0210	Control joint, clean out control joint of debris_WALLS	20.00	lf	3	-	-			-	0.155 /lf	3
n	0366	Control joint, joint sealant, polyurethane, 1/4" x 1/4" (308 LF/Gal)_WALLS	20.00	lf	69	5	-		-	-	3.721 /lf	74
	0020	Concrete finishing, walls, includes breaking ties and patching voids	794.00	sf	1,368	55	-		-	-	1.792 /sf	1,423
	0050	Concrete finishing, walls, burlap rub with grout, includes breaking ties and patching voids	397.00	sf	821	27	-		-	-	2.137 /sf	848
		03 11 13.804 12" CIP Wall			*21,026*	*17,687*			*219*		*2,595.401/CY*	*38,931*
		15.00 CY										
		173.296 Labor hours										
		3.850 Equipment hours										
		03 11 13.804.25 Grade Wall, 1' High x 12" Thick x 397 LF			*21,026*	*17,687*	*0*		*219*	*0*	*2,595.401/CY*	*38,931*
		15.00 CY										
		173.296 Labor hours										
		3.850 Equipment hours										
03 41 33.000.25		*Double Tee Roof x 5,258 SF*										
03 41 33.000		*Precast and Prestressed Concrete*										
	0300	Precast tees, double, floor, 30' span, prestressed	5,257.99	SF	10,613	128,857	-		4,151	-	27.315 /SF	143,621
		03 41 33.000 Precast and Prestressed Concrete			*10,613*	*128,857*			*4,151*		*27.315/SF*	*143,621*
		5,257.99 SF										
		78.870 Labor hours										
		8.763 Equipment hours										
		03 41 33.000.25 Double Tee Roof x 5,258 SF			*10,613*	*128,857*	*0*		*4,151*	*0*	*27.315/SF*	*143,621*
		5,257.99 SF										
		78.870 Labor hours										
		8.763 Equipment hours										
		DIVISION 03 CONCRETE			**489,156**	**675,871**	**0**		**26,916**	**0**	**1,705.212/CY**	**1,191,943**
		699.00 CY										
		4,013.856 Labor hours										
		378.845 Equipment hours										
DIVISION 07		**THERMAL, MOISTURE PROTECTION**										

Central Kitsap Treatment Plant Solids Handling

Kitsap County

Detail Report with Contractor Markups

Item	Description	Takeoff Qty		Labor Amount	Material Amount	Subcontract Amount	Subcontract Name	Equipment Amount	Other Amount	Total Unit Cost	Total Amount
07 51 00.000.25	*Built Up Roofing System PVC x 5,258 SF*										
07 51 00.000	*Built-Up Roofing System (BUR)*										
0800	Aluminum coping, stock units, for 12" wall, excludes scaffolding	334.00	lf	11,147	2,052	-		-	-	39.516 /lf	13,199
2780	2" x 8" miscellaneous wood blocking, to steel construction, per M.B.F.	1.334	mbf	9,473	3,813	-		-	-	9,959.925 /mbf	13,287
2780	2" x 8" miscellaneous wood blocking, to steel construction, per M.B.F.	0.334	mbf	2,372	955	-		-	-	9,959.880 /mbf	3,327
2700	Elastomeric sheet waterproofing, polyvinyl chloride sheets, plain, 30 mils thick	5,258.00	SF	24,959	3,218	-		-	-	5.359 /SF	28,177
1725	Polyisocyanurate insulation, for roof decks, 2" thick, 2#/CF density, fastening excluded	5,258.00	sf	4,871	10,459	-		-	-	2.916 /sf	15,330
1745	Polyisocyanurate insulation, for roof decks, 3" thick, 2#/CF density, fastening excluded	5,258.00	sf	5,366	15,641	-		-	-	3.995 /sf	21,007
0825	Asphalt shingles, #30 felt underlayment	53.00	sq	1,214	1,226	-		-	-	46.034 /sq	2,440
0100	Sheet metal flashing, aluminum, flexible, mill finish, .032" thick, including up to 4 bends	580.00	sf	5,312	6,538	-		-	-	20.431 /sf	11,850
	07 51 00.000 Built-Up Roofing System (BUR)			*64,712*	*43,902*					*20.657/SF*	*108,614*
	5,258.00 SF										
	515.203 Labor hours										
	07 51 00.000.25 Built Up Roofing System PVC x 5,258 SF			*64,712*	*43,902*	*0*		*0*	*0*	*20.657/SF*	*108,614*
	5,258.00 SF										
	515.203 Labor hours										
	DIVISION 07 THERMAL, MOISTURE PROTECTION			**64,712**	**43,902**	**0**		**0**	**0**	**20.657/SF**	**108,614**
	5,258.00 SF										
	515.203 Labor hours										
DIVISION 08	**OPENINGS**										
08 11 00.030.20	*(PRIMARY SEP) - Exterior Door, 3' x 7'*										
08 11 00.030	*Metal Doors & Frames (3070)*										
1000	Frames, steel, knock down, hollow metal, single, 16 ga., up to 4-7/8" deep, 3'-0" x 7'-0"	2.00	EA	276	768	-		-	-	522.180 /EA	1,044
5050	Doors, aluminum, commercial entrance, flush panel doors, single, 3'-0" x 7'-0", incl. hinges, push/pull, deadlock, cylinder, threshold, excl. glazing	2.00	ea	1,936	3,388	-		-	-	2,662.265 /ea	5,325
3000	Door hardware, panic device, narrow stile, mortise bar, exit only	2.00	ea	552	2,364	-		-	-	1,458.03 /ea	2,916
0011	Thresholds, aluminum, 3' long door saddles	6.00	lf	138	142	-		-	-	46.748 /lf	280

Central Kitsap Treatment Plant Solids Handling

Kitsap County

Detail Report with Contractor Markups

Item	Description	Takeoff Qty		Labor Amount	Material Amount	Subcontract Amount	Subcontract Name	Equipment Amount	Other Amount	Total Unit Cost	Total Amount
08 11 00.030	*Metal Doors & Frames (3070)*										
1430	Door hardware, hinges, full mortise, high frequency, brass base, US10, 4-1/2" x 4-1/2"	3.00	pr	-	358	-		-	-	119.167 /pr	358
1200	Paints & coatings, exterior, door & frame, one side, flush, 1 coat, 3' x 7'	2.00	ea	111	9	-		-	-	60.15 /ea	120
	08 11 00.030 Metal Doors & Frames (3070)			*3,014*	*7,029*					*5,021.62 /EA*	*10,043*
	2.00 EA										
	20.741 Labor hours										
	08 11 00.030.20 (PRIMARY SEP) - Exterior Door, 3' x 7'			*3,014*	*7,029*	*0*		*0*	*0*	*5,021.62 /EA*	*10,043*
	2.00 EA										
	20.741 Labor hours										
08 11 00.060.20	*(PRIMARY SEP) - Exterior Door, 6' x 7'*										
08 11 00.060	*Metal Doors & Frames (6070)*										
3620	Frames, steel, knock down, hollow metal, 14 gauge, up to 5-3/4" D, 7'-0" H, 6'-0" W, double	2.00	EA	368	926	-		-	-	647.01 /EA	1,294
5100	Doors, aluminum, commercial entrance, flush panel doors, pair of, 3'-0" x 7'-0", incl. hinges, push/pull, deadlock, cylinder, threshold, excl. glazing	2.00	pr	2,421	6,402	-		-	-	4,411.190 /pr	8,822
3000	Door hardware, panic device, narrow stile, mortise bar, exit only	4.00	ea	1,105	4,727	-		-	-	1,458.035 /ea	5,832
0011	Thresholds, aluminum, 3' long door saddles	12.00	lf	276	285	-		-	-	46.748 /lf	561
1430	Door hardware, hinges, full mortise, high frequency, brass base, US10, 4-1/2" x 4-1/2"	6.00	pr	-	715	-		-	-	119.175 /pr	715
1200	Paints & coatings, exterior, door & frame, one side, flush, 1 coat, 3' x 7'	4.00	ea	223	18	-		-	-	60.145 /ea	241
	08 11 00.060 Metal Doors & Frames (6070)			*4,392*	*13,073*					*8,732.57 /EA*	*17,465*
	2.00 EA										
	30.549 Labor hours										
	08 11 00.060.20 (PRIMARY SEP) - Exterior Door, 6' x 7'			*4,392*	*13,073*	*0*		*0*	*0*	*8,732.57 /EA*	*17,465*
	2.00 EA										
	30.549 Labor hours										
08 36 13.000.20	*Overhead Door, 14' x 14'*										
08 36 13.000	*Overhead Door - Sectional Aluminum*										
0500	Doors, rolling service, steel, manual, 20 gauge, 14' x 14' high, incl. hardware	2.00	EA	6,051	12,705	-		-	-	9,378.300 /EA	18,757
3300	Doors, rolling service, steel, manual, for enamel finish, add	392.00	sf	-	1,699	-		-	-	4.334 /sf	1,699
3700	Doors, rolling service, steel, manual, for safety edge bottom bar, electric, add	28.00	lf	-	2,482	-		-	-	88.64 /lf	2,482

Central Kitsap Treatment Plant Solids Handling

Kitsap County

Detail Report with Contractor Markups

Item		Description	Takeoff Qty		Labor Amount	Material Amount	Subcontract Amount	Subcontract Name	Equipment Amount	Other Amount	Total Unit Cost	Total Amount
08 36 13.000		*Overhead Door - Sectional Aluminum*										
	4000	Doors, rolling service, steel, manual, for weatherstripping, extruded rubber, jambs, add	84.00	lf	-	2,598	-		-	-	30.926 /lf	2,598
	4500	Doors, rolling service, steel, manual, motor operators for, to 14' x 14' opening	2.00	ea	968	4,727	-		-	-	2,847.855 /ea	5,696
	4700	Doors, rolling service, steel, manual, for fire door, additional fusible link, add	4.00	ea	-	244	-		-	-	61.065 /ea	244
		08 36 13.000 Overhead Door - Sectional Aluminum			*7,020*	*24,455*					*15,737.495/EA*	*31,475*
		2.00 EA										
		46.40 Labor hours										
		08 36 13.000.20 Overhead Door, 14' x 14'			*7,020*	*24,455*	*0*		*0*	*0*	*15,737.495/EA*	*31,475*
		2.00 EA										
		46.40 Labor hours										
		DIVISION 08 OPENINGS			**14,426**	**44,557**	**0**		**0**	**0**	**9,830.562/EA**	**58,983**
		6.00 EA										
		97.690 Labor hours										

DIVISION 31 EARTHWORK

31.23.10.P005 *Excavation, Backfill, and Haul Off-Site*

31 23 10.000		*Excavation, Backfill, and Haul Off-Site*										
n	6260	Strt excvt for minor strtr,bank measr,for sprd and mat ftngs,elvtr pits,and small bldng fndtn,sandy clay loam,2 cy bucket,machin excvtn,hydrlc backhoe	1,270.00	CY	11,807	-	-		9,936	-	17.121 /CY	21,743
	4010	Backfill, structural, sandy clay & loam, 200 H.P. dozer, 50' haul, from existing stockpile, excludes compaction	565.00	CY	355	-	-		620	-	1.726 /CY	975
	4060	Borrow, common earth, 1-1/2 C.Y. bucket, loading and/or spreading, front end loader, wheel-mounted	565.00	CY	892	8,225	-		438	-	16.912 /CY	9,555
n	0560	Hauling,excavated borrow material,loose cubic yards,20 mile round trip,0.4 load/hr,base wide rate,12 cy truck,highway haulers,excludes loading	885.00	CY	22,288	-	-		23,094	-	51.279 /CY	45,382
	0400	Compaction, structural, select fill, 8" lifts, sheepsfoot or wobbly wheel roller	565.00	CY	577	-	-		902	-	2.617 /CY	1,479
		31 23 10.000 Excavation, Backfill, and Haul Off-Site			*35,919*	*8,225*			*34,990*		*20.554/CY*	*79,135*
		3,850.00 CY										
		289.908 Labor hours										
		238.106 Equipment hours										

Central Kitsap Treatment Plant Solids Handling

Kitsap County

Detail Report with Contractor Markups

Item	Description	Takeoff Qty		Labor Amount	Material Amount	Subcontract Amount	Subcontract Name	Equipment Amount	Other Amount	Total Unit Cost	Total Amount
	31.23.10.P005 Excavation, Backfill, and Haul Off-Site			*35,919*	*8,225*	*0*		*34,990*	*0*	*20.554/CY*	*79,135*
	3,850.00 CY										
	289.908 Labor hours										
	238.106 Equipment hours										
	DIVISION 31 EARTHWORK			**35,919**	**8,225**	**0**		**34,990**	**0**	**20.554/CY**	**79,135**
	3,850.00 CY										
	289.908 Labor hours										
	238.106 Equipment hours										
DIVISION 46	**WATER AND WASTEWATER EQUIPMENT**										
43.23.57.015	*Thickened Stream Pumps and Diversion Header*										
43 23 57.000	*Progressive Cavity Pumps*										
n 0010	Allowance - diversion system	1.00	EA	18,109	103,187	-		4,898		126,193.86 /EA	126,194
n 0010	Progressive cavity feed pumps pump 40 hp	4.00	EA	48,291	343,957	-		13,061		101,327.103 /EA	405,308
	43 23 57.000 Progressive Cavity Pumps			*66,400*	*447,144*			*17,958*		*106,300.454/EA*	*531,502*
	5.00 EA										
	440.00 Labor hours										
	88.00 Equipment hours										
	43.23.57.015 Thickened Stream Pumps and Diversion Header			*66,400*	*447,144*	*0*		*17,958*	*0*	*106,300.454/EA*	*531,502*
	5.00 EA										
	440.00 Labor hours										
	88.00 Equipment hours										
43.23.57.023	*Solids stream*										
43 23 57.010	*Pumps NOC*										
n 0010	Solids Stream Feed System - allowacne	2.00	EA	24,145	120,385	-		6,530		75,530.30 /EA	151,061
	43 23 57.010 Pumps NOC			*24,145*	*120,385*			*6,530*			*151,061*
	160.00 Labor hours										
	32.00 Equipment hours										
	43.23.57.023 Solids stream			*24,145*	*120,385*	*0*		*6,530*	*0*		*151,061*
	160.00 Labor hours										
	32.00 Equipment hours										
43.25.53.005	*Polymer Activation System*										
43 25 53.000	*Pumping Equipment - Chemical Feed/Metering*										
0020	Poly tank, high density polyethylene, 1,250 gallon	3.00	ea	1,224	8,900	-		118	-	3,414.067 /ea	10,242

AACE Classification Accuracy Range

Upper Range +50% **Lower Range -30%**

Central Kitsap Treatment Plant Solids Handling

Kitsap County

Detail Report with Contractor Markups

Item		Description	Takeoff Qty		Labor Amount	Material Amount	Subcontract Amount	Subcontract Name	Equipment Amount	Other Amount	Total Unit Cost	Total Amount
43 25 53.000		*Pumping Equipment - Chemical Feed/Metering*										
	0010	Polymer mixing and feed skid, 10gph, skid mounted w/ control	2.00	EA	17,620	257,968	-			706	138,146.950 /EA	276,294
	0010	Polymer feed pumps	3.00	EA	10,936	103,187	-			848	38,323.707 /EA	114,971
		43 25 53.000 Pumping Equipment - Chemical Feed/Metering			*29,780*	*370,055*			*118*	*1,554*	*80,301.444/EA*	*401,507*
		5.00 EA										
		198.50 Labor hours										
		1.50 Equipment hours										
		43.25.53.005 Polymer Activation System			*29,780*	*370,055*	*0*		*118*	*1,554*		*401,507*
		198.50 Labor hours										
		1.50 Equipment hours										
43.41.43.005		*Tote mixer*										
43 41 43.000		*Tanks - Polyethylene Chemical Tanks*										
	9900	Tote mixer w/ scale	2.00	EA	2,430	17,198	-			251	9,939.665 /EA	19,879
		43 41 43.000 Tanks - Polyethylene Chemical Tanks			*2,430*	*17,198*				*251*		*19,879*
		16.00 Labor hours										
		43.41.43.005 Tote mixer			*2,430*	*17,198*	*0*		*0*	*251*	*9,939.665/EA*	*19,879*
		2.00 EA										
		16.00 Labor hours										
46.24.23.005		*Inline Sludge Grinder*										
46 24 23.000		*Sludge Grinders*										
	0001	Inline Grinders	1.00	EA	3,398	23,217	-		361	-	26,976.04 /EA	26,976
		46 24 23.000 Sludge Grinders			*3,398*	*23,217*			*361*		*26,976.04 /EA*	*26,976*
		1.00 EA										
		46.24.23.005 Inline Sludge Grinder			*3,398*	*23,217*	*0*		*361*	*0*	*26,976.04 /EA*	*26,976*
		1.00 EA										
46.41.00.010		*Flocculation Tank Mixer*										
46 41 00.000		*Submersible Mixers*										
	0010	Tank Mixer, submersible compact unit	3.00	EA	29,163	196,056	-			1,691	75,636.570 /EA	226,910
		46 41 00.000 Submersible Mixers			*29,163*	*196,056*				*1,691*	*75,636.570/EA*	*226,910*
		3.00 EA										
		192.00 Labor hours										
		46.41.00.010 Flocculation Tank Mixer			*29,163*	*196,056*	*0*		*0*	*1,691*	*75,636.570/EA*	*226,910*
		3.00 EA										

AACE Classification Accuracy Range

Upper Range +50% **Lower Range -30%**

Central Kitsap Treatment Plant Solids Handling

Kitsap County

Detail Report with Contractor Markups

Item	Description	Takeoff Qty		Labor Amount	Material Amount	Subcontract Amount	Subcontract Name	Equipment Amount	Other Amount	Total Unit Cost	Total Amount
	46.41.00.010 Flocculation Tank Mixer			*29,163*	*196,056*	*0*		*0*	*1,691*	*75,636.570/EA*	*226,910*
	3.00 EA										
	192.00 Labor hours										
46.71.33.005	*Rotary Drum Thickener*										
46 71 33.000	*Rotary Drum Sludge Thickening System*										
n 0010	Rotary drum thickener, FDC RST-775X3600L	3.00	EA	68,266	1,160,856	-		25,431	2,821	419,124.197 /EA	1,257,373
	46 71 33.000 Rotary Drum Sludge Thickening System			*68,266*	*1,160,856*			*25,431*	*2,821*	*419,124.197/EA*	*1,257,373*
	3.00 EA										
	540.00 Labor hours										
	540.00 Equipment hours										
	46.71.33.005 Rotary Drum Thickener			*68,266*	*1,160,856*	*0*		*25,431*	*2,821*	*419,124.197/EA*	*1,257,373*
	3.00 EA										
	540.00 Labor hours										
	540.00 Equipment hours										
	DIVISION 46 WATER AND WASTEWATER EQUIPMENT			**223,582**	**2,334,911**	**0**		**50,399**	**6,317**	**124,533.703/EA**	**2,615,208**
	21.00 EA										
	1,546.50 Labor hours										
	661.50 Equipment hours										
	547 PRIMARY SLUDGE & SEPTAGE BUILDING			***827,795***	***3,107,467***	***0***		***112,304***	***6,317***	***770.993/BSF***	***4,053,883***
	5,258.00 BSF										
	6,463.158 Labor hours										
	1,278.451 Equipment hours										

599 DIGESTERS 1&2 - EXISTING

DIVISION 03 CONCRETE

03 11 13.803.10	*Concrete Tank Wall, Add Tanks Wall Height - Allowance*										
03 11 13.803	*10" CIP Wall*										
0500	C.I.P. concrete forms, wall, wood bulkhead with 2 piece keyway, 1 use, includes erecting, bracing, stripping and cleaning	630.00	lf	13,810	3,684	-		-	-	27.767 /lf	17,493

AACE Classification Accuracy Range

Upper Range +50% **Lower Range -30%**

Central Kitsap Treatment Plant Solids Handling

Kitsap County

Detail Report with Contractor Markups

	Item	Description	Takeoff Qty		Labor Amount	Material Amount	Subcontract Amount	Subcontract Name	Equipment Amount	Other Amount	Total Unit Cost	Total Amount
03 11 13.803		*10" CIP Wall*										
	2550	C.I.P. concrete forms, wall, job built, plywood, over 8' to 16' high, 4 use, includes erecting, bracing, stripping and cleaning	25,200.00	sfca	370,586	42,905	-		-	-	16.408 /sfca	413,491
	5200	Chamfer strip, wood, 3/4" wide	1,260.00	lf	2,370	303	-		-	-	2.122 /lf	2,673
	1400	Tie cones, plastic, for coil tie system, for CIP wall forms, 1/2" bolt diameter x 1" setback length, includes material only	21.00	c	-	2,347	-		-	-	111.785 /c	2,347
n	3010	Waterstop, rubber, center bulb, 1/4" thick x 6" wide_WALLS	1,050.00	lf	7,150	13,543	-		-	-	19.708 /lf	20,693
	0100	Splice rebar, standard, self-aligning type, taper threaded, #4 bars, includes holding rebar in place while splicing	855.80	ea	15,604	18,839	-		-	-	40.247 /ea	34,443
n	2020	Reinforcing steel, unload and sort, add to base_WALLS	77.80	ton	5,859	-	-		2,548	-	108.051 /ton	8,406
n	2214	Reinforcing steel, crane cost for handling, average, add_WALLS	77.80	ton	6,368	-	-		2,769	-	117.449 /ton	9,138
	0700	Reinforcing steel, in place, walls, #3 to #7, A615, grade 60, incl labor for accessories, excl material for accessories	77.80	ton	112,156	194,009	-		-	-	3,935.286 /ton	306,165
	5100	Structural concrete, placing, walls, pumped, 12" thick, includes leveling (strike off) & consolidation, excludes material	778.00	cy	48,822	-	-		5,481	-	69.798 /cy	54,303
	5100	Structural concrete, placing, walls, pumped, 12" thick, includes leveling (strike off) & consolidation, excludes material	77.80	cy	4,882	-	-		548	-	69.798 /cy	5,430
n	0525	Struct WALLS concrete,ready mix,normal wt,4500 psi,includes local aggregate,sand,portland cement and water,delivered, includes all additives	778.00	CY	-	307,739	-		-	-	395.551 /CY	307,739
n	0525	Struct WALLS concrete,ready mix,normal wt,4500 psi,includes local aggregate,sand,portland cement and water,delivered, includes all additives	77.80	cy	-	30,774	-		-	-	395.551 /cy	30,774
n	0210	Control joint, clean out control joint of debris_WALLS	630.00	lf	97	-	-			-	0.155 /lf	97
n	0366	Control joint, joint sealant, polyurethane, 1/4" x 1/4" (308 LF/Gal)_WALLS	630.00	lf	2,172	173	-		-	-	3.722 /lf	2,345
	0020	Concrete finishing, walls, includes breaking ties and patching voids	25,200.00	sf	43,433	1,734	-		-	-	1.792 /sf	45,166
	0050	Concrete finishing, walls, burlap rub with grout, includes breaking ties and patching voids	12,600.00	sf	26,060	867	-		-	-	2.137 /sf	26,927
		03 11 13.803 10" CIP Wall			*659,369*	*616,917*			*11,346*		*1,655.054/CY*	*1,287,632*
		778.00 CY										
		5,433.205 Labor hours										
		199.709 Equipment hours										
		03 11 13.803.10 Concrete Tank Wall, Add Tanks Wall Height - Allowance			*659,369*	*616,917*	*0*		*11,346*	*0*	*1,655.054/CY*	*1,287,632*
		778.00 CY										
		5,433.205 Labor hours										

AACE Classification Accuracy Range

Upper Range +50% **Lower Range -30%**

Central Kitsap Treatment Plant Solids Handling

Kitsap County

Detail Report with Contractor Markups

Item	Description	Takeoff Qty		Labor Amount	Material Amount	Subcontract Amount	Name	Equipment Amount	Other Amount	Total Unit Cost	Total Amount
	03 11 13.803.10 Concrete Tank Wall, Add Tanks Wall Height - Allowance			*659,369*	*616,917*	*0*		*11,346*	*0*	*1,655.054/CY*	*1,287,632*
	778.00 CY										
	5,433.205 Labor hours										
	199.709 Equipment hours										
	DIVISION 03 CONCRETE			**659,369**	**616,917**	**0**		**11,346**	**0**	**1,655.054/CY**	**1,287,632**
	778.00 CY										
	5,433.205 Labor hours										
	199.709 Equipment hours										
DIVISION 13	**SPECIAL CONSTRUCTION**										
13.61.02.010	*Fixed Steel Cover*										
13 61 02.000	*Digester Cover*										
9103	Remove existing digester cover for replacement	1.00	ea	85,217				32,756	-	117,973.13 /ea	117,973
9103	Structural framing, roof cover, flat, fixed roof, gas tight	2.00	ea			2,038,160			-	1,019,080.21 /ea	2,038,160
9103	Install digester fixed cover	2.00	ea	90,543		54,594		50,954	-	98,045.33 /ea	196,091
	13 61 02.000 Digester Cover			*175,760*		*2,092,754*		*83,710*			*2,352,224*
	1,320.00 Labor hours										
	240.00 Equipment hours										
	13.61.02.010 Fixed Steel Cover			*175,760*	*0*	*2,092,754*		*83,710*	*0*		*2,352,224*
	1,320.00 Labor hours										
	240.00 Equipment hours										
	DIVISION 13 SPECIAL CONSTRUCTION			**175,760**	**0**	**2,092,754**		**83,710**	**0**		**2,352,224**
	1,320.00 Labor hours										
	240.00 Equipment hours										
DIVISION 46	**WATER AND WASTEWATER EQUIPMENT**										
43.23.57.010	*Septage Equalization Pumps*										
43 23 57.000	*Progressive Cavity Pumps*										
n 0010	Progressive cavity transfer pump	2.00	EA	24,145	120,385	-		6,530		75,530.305 /EA	151,061
n 0010	Feed flow control valve system	1.00	LS	7,244	137,583	-		1,381		146,207.88 /LS	146,208
	43 23 57.000 Progressive Cavity Pumps			*31,389*	*257,968*			*7,912*		*148,634.245/EA*	*297,268*
	2.00 EA										
	208.00 Labor hours										
	48.00 Equipment hours										

Central Kitsap Treatment Plant Solids Handling

Kitsap County

Detail Report with Contractor Markups

Item		Description	Takeoff Qty		Labor Amount	Material Amount	Subcontract Amount	Subcontract Name	Equipment Amount	Other Amount	Total Unit Cost	Total Amount
		43.23.57.010 Septage Equalization Pumps			*31,389*	*257,968*	*0*		*7,912*	*0*	*148,634.245/EA*	*297,268*
		2.00 EA										
		208.00 Labor hours										
		48.00 Equipment hours										
43.23.57.037		*Centrifuge feed and transfer pumps*										
43 23 57.000		*Progressive Cavity Pumps*										
n	0010	Progressive cavity feed pumps pump 40 hp	4.00	EA	48,291	343,957	-		13,061		101,327.098 /EA	405,308
		43 23 57.000 Progressive Cavity Pumps			*48,291*	*343,957*			*13,061*		*101,327.098/EA*	*405,308*
		4.00 EA										
		320.00 Labor hours										
		64.00 Equipment hours										
		43.23.57.037 Centrifuge feed and transfer pumps			*48,291*	*343,957*	*0*		*13,061*	*0*	*101,327.098/EA*	*405,308*
		4.00 EA										
		320.00 Labor hours										
		64.00 Equipment hours										
43.23.58.010		*Sludge Recirc Pumps*										
43 23 58.000		*Rotary Lobe Pumps*										
	1000	Rotary Lobe pumps	2.00	ea	7,460	87,203	-		1,263	-	47,963.19 /ea	95,926
	1000	rem: all the other costs	0.00	ea	0	0	-		0	-		
		43 23 58.000 Rotary Lobe Pumps			*7,460*	*87,203*			*1,263*			*95,926*
		64.00 Labor hours										
		16.00 Equipment hours										
		43.23.58.010 Sludge Recirc Pumps			*7,460*	*87,203*	*0*		*1,263*	*0*		*95,926*
		64.00 Labor hours										
		16.00 Equipment hours										
46.73.33.010		*Rotamix Mix System*										
46 73 33.010		*Digester Mixing System*										
	0008	Mixing Assembly w/ Chopper pumps	3.00	ea	57,147	474,661	-		23,973		185,260.487 /ea	555,781
	0008	Rotamix Spare parts	2.00	ea		61,912	-				30,956.145 /ea	61,912
	0008	Rotating sub-assembly	1.00	ea		29,236	-				29,236.38 /ea	29,236
		46 73 33.010 Digester Mixing System			*57,147*	*565,810*			*23,973*			*646,930*
		480.00 Labor hours										
		180.00 Equipment hours										
		46.73.33.010 Rotamix Mix System			*57,147*	*565,810*	*0*		*23,973*	*0*		*646,930*
		480.00 Labor hours										
		180.00 Equipment hours										

Central Kitsap Treatment Plant Solids Handling

Kitsap County

Detail Report with Contractor Markups

Item		Description	Takeoff Qty		Labor Amount	Material Amount	Subcontract Amount	Subcontract Name	Equipment Amount	Other Amount	Total Unit Cost	Total Amount
46.73.41.010		*Heat Exchanger - Recirc Digested Sludge*										
46 73 41.020		*Digester - Heat Exchanger*										
	0100	Digester, Heat Exchangers	2.00	EA	19,589	120,385			9,042		74,508.095 /EA	149,016
		46 73 41.020 Digester - Heat Exchanger			*19,589*	*120,385*			*9,042*			*149,016*
		144.00 Labor hours										
		144.00 Equipment hours										
		46.73.41.010 Heat Exchanger - Recirc Digested Sludge			*19,589*	*120,385*	*0*		*9,042*	*0*	*74,508.095/EA*	*149,016*
		2.00 EA										
		144.00 Labor hours										
		144.00 Equipment hours										
		DIVISION 46 WATER AND WASTEWATER EQUIPMENT			**163,876**	**1,375,323**	**0**		**55,251**	**0**	**199,306.198/EA**	**1,594,450**
		8.00 EA										
		1,216.00 Labor hours										
		452.00 Equipment hours										
		599 DIGESTERS 1&2 - EXISTING			***999,005***	***1,992,241***	***2,092,754***		***150,307***	***0***	***4,026,389.37 /MG***	***5,234,306***
		1.30 MG										
		7,969.205 Labor hours										
		891.709 Equipment hours										

600 DIGESTERS 3&4 - NEW W/ CONTROL BUILDING

DIVISION 03 CONCRETE

Item		Description	Takeoff Qty		Labor Amount	Material Amount	Subcontract Amount	Subcontract Name	Equipment Amount	Other Amount	Total Unit Cost	Total Amount
03 11 13.154.25		*Concrete Tank Footing, 30" High x 67" Thick x 422 LF*										
03 11 13.154		*Cont. Footing 60" x 18"*										
	3050	C.I.P. concrete forms, slab on grade, edge, wood, 7" to 12" high, 4 use, includes erecting, bracing, stripping and cleaning	2,137.915	sfca	18,533	4,486	-		-	-	10.767 /sfca	23,019
n	9015	C.I.P. concrete forms, bulkhead for slab on grade w/ keyway, up to 12", exp metal, includes erecting, bracing, stripping and cleaning	294.503	sfca	1,521	228	-		-	-	5.938 /sfca	1,749
n	2050	Reinforcing steel, unload and sort, add to base_SLAB ON GRADE	19.163	ton	1,443	-	-		628	-	108.049 /ton	2,071
	0600	Reinforcing steel, in place, slab on grade, #3 to #7, A615, grade 60, incl labor for accessories, excl material for accessories	19.163	ton	36,033	47,787	-		-	-	4,374.033 /ton	83,820

Central Kitsap Treatment Plant Solids Handling

Kitsap County

Detail Report with Contractor Markups

	Item	Description	Takeoff Qty		Labor Amount	Material Amount	Subcontract Amount	Subcontract Name	Equipment Amount	Other Amount	Total Unit Cost	Total Amount
03 11 13.154		*Cont. Footing 60" x 18"*										
	2220	Reinforcing steel, crane cost for handling, 90 picks/day, up to 0.5 Ton/day	19.163	ton	4,123	-	-		1,793	-	308.719 /ton	5,916
	4650	Structural concrete, placing, slab on grade, pumped, over 6" thick, includes leveling (strike off) & consolidation, excludes material	21.90	cy	817	-	-		92	-	41.500 /cy	909
	4650	Structural concrete, placing, slab on grade, pumped, over 6" thick, includes leveling (strike off) & consolidation, excludes material	219.00	cy	8,171	-	-		917	-	41.502 /cy	9,089
n	0725	Struct SLAB ON GRADE concrete,ready mix,normal wt,4500 psi,includes local aggregate,sand,portland cement and water,delivered, includes all additives	21.90	cy	-	8,663	-		-	-	395.551 /cy	8,663
n	0725	Struct SLAB ON GRADE concrete,ready mix,normal wt,4500 psi,includes local aggregate,sand,portland cement and water,delivered, includes all additives	219.00	CY	-	86,626	-		-	-	395.551 /CY	86,626
n	0255	Concrete finishing, floors, manual screed, bull float, machine float & steel trowel (walk-behind)_SOG	2,356.026	sf	3,667	-	-		199	-	1.641 /sf	3,866
n	0122	Control joint, concrete floor slab, sawcut in green concrete, 1" depth_SOG	117.801	lf	110	6	-		11	-	1.075 /lf	127
n	0215	Control joint, clean out control joint of debris_SOG	117.801	lf	18	-	-			-	0.155 /lf	18
n	0367	Control joint, joint sealant, polyurethane, 1/4" x 1/4" (308 LF/Gal)_SOG	235.603	lf	812	65	-		-	-	3.722 /lf	877
n	0310	Concrete surface treatment, curing, sprayed membrane compound_SOG	23.56	csf	401	302	-		-	-	29.835 /csf	703
	1200	Vapor retarders, building paper, polyethylene vapor barrier, standard, 10 mil (.010" thick)	23.56	sq	629	330	-		-	-	40.703 /sq	959
n	1310	Fill, gravel fill, compacted, under floor slabs, alternate pricing method, 12" deep_SOG	100.00	ecy	2,323	5,503	-		194	-	80.204 /ecy	8,020
n	1136	Hauling, excavated borrow material, loose cubic yards, 20 mile round trip, 0.4 loads/hour, 16.5 c.y. dump trailer, highway haulers, excludes loading	100.00	lcy	1,737	-	-		1,948	-	36.849 /lcy	3,685
		03 11 13.154 Cont. Footing 60" x 18"			*80,338*	*153,995*			*5,782*		*1,096.415/CY*	*240,115*
		219.00 CY										
		648.259 Labor hours										
		81.881 Equipment hours										
		03 11 13.154.25 Concrete Tank Footing, 30" High x 67" Thick x 422 LF			*80,338*	*153,995*	*0*		*5,782*	*0*	*1,096.415/CY*	*240,115*
		219.00 CY										
		648.259 Labor hours										
		81.881 Equipment hours										

03 11 13.154.30 *Concrete Stairway Footing, 36" High x 10" Wide x 54 LF*

03 11 13.154 *Cont. Footing 60" x 18"*

Central Kitsap Treatment Plant Solids Handling

Kitsap County

Detail Report with Contractor Markups

	Item	Description	Takeoff Qty		Labor Amount	Material Amount	Subcontract Amount	Subcontract Name	Equipment Amount	Other Amount	Total Unit Cost	Total Amount
03 11 13.154		*Cont. Footing 60" x 18"*										
	3050	C.I.P. concrete forms, slab on grade, edge, wood, 7" to 12" high, 4 use, includes erecting, bracing, stripping and cleaning	328.998	sfca	2,852	690	-		-	-	10.767 /sfca	3,542
n	9015	C.I.P. concrete forms, bulkhead for slab on grade w/ keyway, up to 12", exp metal, includes erecting, bracing, stripping and cleaning	6.747	sfca	35	5	-		-	-	5.94 /sfca	40
n	2050	Reinforcing steel, unload and sort, add to base_SLAB ON GRADE	0.438	ton	33	-	-		14	-	108.08 /ton	47
	0600	Reinforcing steel, in place, slab on grade, #3 to #7, A615, grade 60, incl labor for accessories, excl material for accessories	0.438	ton	824	1,092	-		-	-	4,374.018 /ton	1,916
	2220	Reinforcing steel, crane cost for handling, 90 picks/day, up to 0.5 Ton/day	0.438	ton	94	-	-		41	-	308.699 /ton	135
	4650	Structural concrete, placing, slab on grade, pumped, over 6" thick, includes leveling (strike off) & consolidation, excludes material	0.50	cy	19	-	-		2	-	41.48 /cy	21
	4650	Structural concrete, placing, slab on grade, pumped, over 6" thick, includes leveling (strike off) & consolidation, excludes material	5.00	cy	187	-	-		21	-	41.504 /cy	208
n	0725	Struct SLAB ON GRADE concrete,ready mix,normal wt,4500 psi,includes local aggregate,sand,portland cement and water,delivered, includes all additives	0.50	cy	-	198	-		-	-	395.60 /cy	198
n	0725	Struct SLAB ON GRADE concrete,ready mix,normal wt,4500 psi,includes local aggregate,sand,portland cement and water,delivered, includes all additives	5.00	CY	-	1,978	-		-	-	395.55 /CY	1,978
n	0255	Concrete finishing, floors, manual screed, bull float, machine float & steel trowel (walk-behind)_SOG	44.982	sf	70	-	-		4	-	1.641 /sf	74
n	0122	Control joint, concrete floor slab, sawcut in green concrete, 1" depth_SOG	2.249	lf	2	0	-		0	-	1.076 /lf	2
n	0215	Control joint, clean out control joint of debris_SOG	2.249	lf	0	-	-			-	0.15 /lf	0
n	0367	Control joint, joint sealant, polyurethane, 1/4" x 1/4" (308 LF/Gal)_SOG	4.498	lf	16	1	-		-	-	3.722 /lf	17
n	0310	Concrete surface treatment, curing, sprayed membrane compound_SOG	0.45	csf	8	6	-		-	-	29.80 /csf	13
	1200	Vapor retarders, building paper, polyethylene vapor barrier, standard, 10 mil (.010" thick)	0.45	sq	12	6	-		-	-	40.70 /sq	18
n	1310	Fill, gravel fill, compacted, under floor slabs, alternate pricing method, 12" deep_SOG	2.00	ecy	46	110	-		4	-	80.20 /ecy	160
n	1136	Hauling, excavated borrow material, loose cubic yards, 20 mile round trip, 0.4 loads/hour, 16.5 c.y. dump trailer, highway haulers, excludes loading	2.00	lcy	35	-	-		39	-	36.845 /lcy	74
		03 11 13.154 Cont. Footing 60" x 18"			*4,232*	*4,087*			*125*		*1,688.738/CY*	*8,444*

5.00 CY

35.130 Labor hours
1.733 Equipment hours

AACE Classification Accuracy Range

Upper Range +50% **Lower Range -30%**

Central Kitsap Treatment Plant Solids Handling

Kitsap County

Detail Report with Contractor Markups

Item		Description	Takeoff Qty		Labor Amount	Material Amount	Subcontract Amount	Name	Equipment Amount	Other Amount	Total Unit Cost	Total Amount
		03 11 13.154.30 Concrete Stairway Footing, 36" High x 10" Wide x 54 LF			*4,232*	*4,087*	*0*		*125*	*0*	*1,688.738/CY*	*8,444*
		5.00 CY										
		35.130 Labor hours										
		1.733 Equipment hours										
03 11 13.154.35		*Concrete Footing, 36" High x 24' Wide x 144 LF*										
03 11 13.154		*Cont. Footing 60" x 18"*										
	3050	C.I.P. concrete forms, slab on grade, edge, wood, 7" to 12" high, 4 use, includes erecting, bracing, stripping and cleaning	876.00	sfca	7,594	1,838	-		-	-	10.767 /sfca	9,432
n	9015	C.I.P. concrete forms, bulkhead for slab on grade w/ keyway, up to 12", exp metal, includes erecting, bracing, stripping and cleaning	43.20	sfca	223	33	-		-	-	5.938 /sfca	257
n	2050	Reinforcing steel, unload and sort, add to base_SLAB ON GRADE	2.80	ton	211	-	-		92	-	108.057 /ton	303
	0600	Reinforcing steel, in place, slab on grade, #3 to #7, A615, grade 60, incl labor for accessories, excl material for accessories	2.80	ton	5,265	6,982	-		-	-	4,374.032 /ton	12,247
	2220	Reinforcing steel, crane cost for handling, 90 picks/day, up to 0.5 Ton/day	2.80	ton	602	-	-		262	-	308.721 /ton	864
	4650	Structural concrete, placing, slab on grade, pumped, over 6" thick, includes leveling (strike off) & consolidation, excludes material	3.20	cy	119	-	-		13	-	41.50 /cy	133
	4650	Structural concrete, placing, slab on grade, pumped, over 6" thick, includes leveling (strike off) & consolidation, excludes material	32.00	cy	1,194	-	-		134	-	41.502 /cy	1,328
n	0725	Struct SLAB ON GRADE concrete,ready mix,normal wt,4500 psi,includes local aggregate,sand,portland cement and water,delivered, includes all additives	32.00	CY	-	12,658	-		-	-	395.551 /CY	12,658
n	0725	Struct SLAB ON GRADE concrete,ready mix,normal wt,4500 psi,includes local aggregate,sand,portland cement and water,delivered, includes all additives	3.20	cy	-	1,266	-		-	-	395.55 /cy	1,266
n	0255	Concrete finishing, floors, manual screed, bull float, machine float & steel trowel (walk-behind)_SOG	288.00	sf	448	-	-		24	-	1.641 /sf	473
n	0122	Control joint, concrete floor slab, sawcut in green concrete, 1" depth_SOG	14.40	lf	13	1	-		1	-	1.076 /lf	15
n	0215	Control joint, clean out control joint of debris_SOG	14.40	lf	2	-	-			-	0.156 /lf	2
n	0367	Control joint, joint sealant, polyurethane, 1/4" x 1/4" (308 LF/Gal)_SOG	28.80	lf	99	8	-		-	-	3.721 /lf	107
n	0310	Concrete surface treatment, curing, sprayed membrane compound_SOG	2.88	csf	49	37	-		-	-	29.844 /csf	86
	1200	Vapor retarders, building paper, polyethylene vapor barrier, standard, 10 mil (.010" thick)	2.88	sq	77	40	-		-	-	40.698 /sq	117
n	1310	Fill, gravel fill, compacted, under floor slabs, alternate pricing method, 12" deep_SOG	12.00	ecy	279	660	-		23	-	80.203 /ecy	962

Central Kitsap Treatment Plant Solids Handling

Kitsap County

Detail Report with Contractor Markups

	Item	Description	Takeoff Qty		Labor Amount	Material Amount	Subcontract Amount	Name	Equipment Amount	Other Amount	Total Unit Cost	Total Amount
03 11 13.154		*Cont. Footing 60" x 18"*										
n	1136	Hauling, excavated borrow material, loose cubic yards, 20 mile round trip, 0.4 loads/hour, 16.5 c.y. dump trailer, highway haulers, excludes loading	12.00	lcy	208	-	-		234	-	36.852 /lcy	442
		03 11 13.154 Cont. Footing 60" x 18"			*16,385*	*23,523*			*784*		*1,271.629/CY*	*40,692*
		32.00 CY										
		134.037 Labor hours										
		10.822 Equipment hours										
		03 11 13.154.35 Concrete Footing, 36" High x 24' Wide x 144 LF			*16,385*	*23,523*	*0*		*784*	*0*	*1,271.629/CY*	*40,692*
		32.00 CY										
		134.037 Labor hours										
		10.822 Equipment hours										
03 11 13.300.10		*Concrete Stairway Elevated Slab, 12" Thick x 2,341 SF*										
03 11 13.303		*12" Elevated Slab*										
	3050	C.I.P. concrete forms, slab on grade, edge, wood, 7" to 12" high, 4 use, includes erecting, bracing, stripping and cleaning	193.536	sfca	1,678	406	-		-	-	10.767 /sfca	2,084
n	9015	C.I.P. concrete forms, bulkhead for slab on grade w/ keyway, up to 12", exp metal, includes erecting, bracing, stripping and cleaning	117.051	sfca	604	91	-		-	-	5.938 /sfca	695
n	2050	Reinforcing steel, unload and sort, add to base_SLAB ON GRADE	7.613	ton	573	-	-		249	-	108.051 /ton	823
	0600	Reinforcing steel, in place, slab on grade, #3 to #7, A615, grade 60, incl labor for accessories, excl material for accessories	7.613	ton	14,315	18,984	-		-	-	4,374.035 /ton	33,300
	2220	Reinforcing steel, crane cost for handling, 90 picks/day, up to 0.5 Ton/day	7.613	ton	1,638	-	-		712	-	308.714 /ton	2,350
	4650	Structural concrete, placing, slab on grade, pumped, over 6" thick, includes leveling (strike off) & consolidation, excludes material	8.70	cy	325	-	-		36	-	41.502 /cy	361
	4650	Structural concrete, placing, slab on grade, pumped, over 6" thick, includes leveling (strike off) & consolidation, excludes material	87.00	cy	3,246	-	-		364	-	41.502 /cy	3,611
n	0725	Struct SLAB ON GRADE concrete,ready mix,normal wt,4500 psi,includes local aggregate,sand,portland cement and water,delivered, includes all additives	8.70	cy	-	3,441	-		-	-	395.551 /cy	3,441
n	0725	Struct SLAB ON GRADE concrete,ready mix,normal wt,4500 psi,includes local aggregate,sand,portland cement and water,delivered, includes all additives	87.00	CY	-	34,413	-		-	-	395.551 /CY	34,413
n	0255	Concrete finishing, floors, manual screed, bull float, machine float & steel trowel (walk-behind)_SOG	2,341.011	sf	3,644	-	-		198	-	1.641 /sf	3,842
n	0122	Control joint, concrete floor slab, sawcut in green concrete, 1" depth_SOG	117.051	lf	109	6	-		11	-	1.075 /lf	126

Central Kitsap Treatment Plant Solids Handling

Kitsap County

Detail Report with Contractor Markups

	Item	Description	Takeoff Qty		Labor Amount	Material Amount	Subcontract Amount	Subcontract Name	Equipment Amount	Other Amount	Total Unit Cost	Total Amount
03 11 13.303		*12" Elevated Slab*										
n	0215	Control joint, clean out control joint of debris_SOG	117.051	lf	18	-	-			-	0.155 /lf	18
n	0367	Control joint, joint sealant, polyurethane, 1/4" x 1/4" (308 LF/Gal)_SOG	234.101	lf	807	64	-		-	-	3.722 /lf	871
n	0310	Concrete surface treatment, curing, sprayed membrane compound_SOG	23.41	csf	399	300	-		-	-	29.835 /csf	698
	1200	Vapor retarders, building paper, polyethylene vapor barrier, standard, 10 mil (.010" thick)	23.41	sq	625	328	-		-	-	40.703 /sq	953
n	1310	Fill, gravel fill, compacted, under floor slabs, alternate pricing method, 12" deep_SOG	100.00	ecy	2,323	5,503	-		194	-	80.204 /ecy	8,020
n	1136	Hauling, excavated borrow material, loose cubic yards, 20 mile round trip, 0.4 loads/hour, 16.5 c.y. dump trailer, highway haulers, excludes loading	100.00	lcy	1,737	-	-		1,948	-	36.849 /lcy	3,685
		03 11 13.303 12" Elevated Slab			*32,040*	*63,537*			*3,714*		*1,141.272/CY*	*99,291*
		87.00 CY										
		261.254 Labor hours										
		59.408 Equipment hours										
		03 11 13.300.10 Concrete Stairway Elevated Slab, 12" Thick x 2,341 SF			*32,040*	*63,537*	*0*		*3,714*	*0*	*1,141.272/CY*	*99,291*
		87.00 CY										
		261.254 Labor hours										
		59.408 Equipment hours										
03 11 13.504.20		*Stairway Concrete Slab, 24" Thick x 1,326 SF*										
03 11 13.504		*12" Slab on Grade*										
	3050	C.I.P. concrete forms, slab on grade, edge, wood, 7" to 12" high, 4 use, includes erecting, bracing, stripping and cleaning	291.312	sfca	2,525	611	-		-	-	10.767 /sfca	3,137
n	9015	C.I.P. concrete forms, bulkhead for slab on grade w/ keyway, up to 12", exp metal, includes erecting, bracing, stripping and cleaning	132.598	sfca	685	103	-		-	-	5.938 /sfca	787
n	2050	Reinforcing steel, unload and sort, add to base_SLAB ON GRADE	8.663	ton	652	-	-		284	-	108.054 /ton	936
	0600	Reinforcing steel, in place, slab on grade, #3 to #7, A615, grade 60, incl labor for accessories, excl material for accessories	8.663	ton	16,289	21,603	-		-	-	4,374.036 /ton	37,892
	2220	Reinforcing steel, crane cost for handling, 90 picks/day, up to 0.5 Ton/day	8.663	ton	1,864	-	-		811	-	308.715 /ton	2,674
	4650	Structural concrete, placing, slab on grade, pumped, over 6" thick, includes leveling (strike off) & consolidation, excludes material	9.90	cy	369	-	-		42	-	41.503 /cy	411
	4650	Structural concrete, placing, slab on grade, pumped, over 6" thick, includes leveling (strike off) & consolidation, excludes material	99.00	cy	3,694	-	-		415	-	41.501 /cy	4,109
n	0725	Struct SLAB ON GRADE concrete,ready mix,normal wt,4500 psi,includes local aggregate,sand,portland cement and water,delivered, includes all additives	9.90	cy	-	3,916	-		-	-	395.548 /cy	3,916

AACE Classification Accuracy Range

Upper Range +50% **Lower Range -30%**

Central Kitsap Treatment Plant Solids Handling

Kitsap County

Detail Report with Contractor Markups

	Item	Description	Takeoff Qty		Labor Amount	Material Amount	Subcontract Amount	Subcontract Name	Equipment Amount	Other Amount	Total Unit Cost	Total Amount
03 11 13.504		*12" Slab on Grade*										
n	0725	Struct SLAB ON GRADE concrete,ready mix,normal wt,4500 psi,includes local aggregate,sand,portland cement and water,delivered, includes all additives	99.00	CY	-	39,160	-		-	-	395.551 /CY	39,160
n	0255	Concrete finishing, floors, manual screed, bull float, machine float & steel trowel (walk-behind)_SOG	1,325.979	sf	2,064	-	-		112	-	1.641 /sf	2,176
n	0122	Control joint, concrete floor slab, sawcut in green concrete, 1" depth_SOG	66.299	lf	62	3	-		6	-	1.075 /lf	71
n	0215	Control joint, clean out control joint of debris_SOG	66.299	lf	10	-	-			-	0.155 /lf	10
n	0367	Control joint, joint sealant, polyurethane, 1/4" x 1/4" (308 LF/Gal)_SOG	132.598	lf	457	36	-		-	-	3.722 /lf	494
n	0310	Concrete surface treatment, curing, sprayed membrane compound_SOG	13.26	csf	226	170	-		-	-	29.836 /csf	396
	1200	Vapor retarders, building paper, polyethylene vapor barrier, standard, 10 mil (.010" thick)	13.26	sq	354	186	-		-	-	40.704 /sq	540
n	1310	Fill, gravel fill, compacted, under floor slabs, alternate pricing method, 12" deep_SOG	56.00	ecy	1,301	3,082	-		109	-	80.204 /ecy	4,491
n	1136	Hauling, excavated borrow material, loose cubic yards, 20 mile round trip, 0.4 loads/hour, 16.5 c.y. dump trailer, highway haulers, excludes loading	56.00	lcy	973	-	-		1,091	-	36.849 /lcy	2,064
		03 11 13.504 12" Slab on Grade			*31,525*	*68,870*			*2,868*		*1,043.061/CY*	*103,263*
		99.00 CY										
		252.867 Labor hours										
		41.874 Equipment hours										
		03 11 13.504.20 Stairway Concrete Slab, 24" Thick x 1,326 SF			*31,525*	*68,870*	*0*		*2,868*	*0*	*1,043.061/CY*	*103,263*
		99.00 CY										
		252.867 Labor hours										
		41.874 Equipment hours										
03 11 13.505.10		*Tank Concrete Slab, 30" Thick x 6,658 SF*										
03 11 13.505		*16" Slab on Grade*										
	3050	C.I.P. concrete forms, slab on grade, edge, wood, 7" to 12" high, 4 use, includes erecting, bracing, stripping and cleaning	815.97	sfca	7,073	1,712	-		-	-	10.767 /sfca	8,785
n	9015	C.I.P. concrete forms, bulkhead for slab on grade w/ keyway, up to 12", exp metal, includes erecting, bracing, stripping and cleaning	832.259	sfca	4,298	644	-		-	-	5.938 /sfca	4,942
n	2050	Reinforcing steel, unload and sort, add to base_SLAB ON GRADE	53.988	ton	4,066	-	-		1,768	-	108.051 /ton	5,833
	0600	Reinforcing steel, in place, slab on grade, #3 to #7, A615, grade 60, incl labor for accessories, excl material for accessories	53.988	ton	101,516	134,629	-		-	-	4,374.034 /ton	236,145
	2220	Reinforcing steel, crane cost for handling, 90 picks/day, up to 0.5 Ton/day	53.988	ton	11,616	-	-		5,051	-	308.718 /ton	16,667

Central Kitsap Treatment Plant Solids Handling

Kitsap County

Detail Report with Contractor Markups

	Item	Description	Takeoff Qty		Labor Amount	Material Amount	Subcontract Amount	Subcontract Name	Equipment Amount	Other Amount	Total Unit Cost	Total Amount
03 11 13.505		*16" Slab on Grade*										
	4650	Structural concrete, placing, slab on grade, pumped, over 6" thick, includes leveling (strike off) & consolidation, excludes material	61.70	cy	2,302	-	-		258	-	41.502 /cy	2,561
	4650	Structural concrete, placing, slab on grade, pumped, over 6" thick, includes leveling (strike off) & consolidation, excludes material	617.00	cy	23,022	-	-		2,585	-	41.501 /cy	25,606
n	0725	Struct SLAB ON GRADE concrete,ready mix,normal wt,4500 psi,includes local aggregate,sand,portland cement and water,delivered, includes all additives	61.70	cy	-	24,405	-		-	-	395.551 /cy	24,405
n	0725	Struct SLAB ON GRADE concrete,ready mix,normal wt,4500 psi,includes local aggregate,sand,portland cement and water,delivered, includes all additives	617.00	CY	-	244,055	-		-	-	395.551 /CY	244,055
n	0255	Concrete finishing, floors, manual screed, bull float, machine float & steel trowel (walk-behind)_SOG	6,658.07	sf	10,363	-	-		563	-	1.641 /sf	10,926
n	0122	Control joint, concrete floor slab, sawcut in green concrete, 1" depth_SOG	332.904	lf	310	17	-		31	-	1.075 /lf	358
n	0215	Control joint, clean out control joint of debris_SOG	332.904	lf	52	-	-			-	0.155 /lf	52
n	0367	Control joint, joint sealant, polyurethane, 1/4" x 1/4" (308 LF/Gal)_SOG	665.807	lf	2,295	183	-		-	-	3.722 /lf	2,478
n	0310	Concrete surface treatment, curing, sprayed membrane compound_SOG	66.581	csf	1,133	853	-		-	-	29.835 /csf	1,986
	1200	Vapor retarders, building paper, polyethylene vapor barrier, standard, 10 mil (.010" thick)	66.581	sq	1,777	933	-		-	-	40.704 /sq	2,710
n	1310	Fill, gravel fill, compacted, under floor slabs, alternate pricing method, 12" deep_SOG	284.00	ecy	6,597	15,629	-		551	-	80.204 /ecy	22,778
n	1136	Hauling, excavated borrow material, loose cubic yards, 20 mile round trip, 0.4 loads/hour, 16.5 c.y. dump trailer, highway haulers, excludes loading	284.00	lcy	4,932	-	-		5,533	-	36.849 /lcy	10,465
		03 11 13.505 16" Slab on Grade			*181,351*	*423,062*			*16,341*		*1,006.084/CY*	*620,754*
		617.00 CY										
		1,444.667 Labor hours										
		231.540 Equipment hours										
		03 11 13.505.10 Tank Concrete Slab, 30" Thick x 6,658 SF			*181,351*	*423,062*	*0*		*16,341*	*0*	*1,006.084/CY*	*620,754*
		617.00 CY										
		1,444.667 Labor hours										
		231.540 Equipment hours										
03 11 13.800.10		*Exterior Concrete Stair Wall, 29' High x 156 LF*										
03 11 13.800		*06" CIP Wall*										
	0500	C.I.P. concrete forms, wall, wood bulkhead with 2 piece keyway, 1 use, includes erecting, bracing, stripping and cleaning	227.00	lf	4,976	1,327	-		-	-	27.767 /lf	6,303

AACE Classification Accuracy Range

Upper Range +50% **Lower Range -30%**

Central Kitsap Treatment Plant Solids Handling

Kitsap County

Detail Report with Contractor Markups

	Item	Description	Takeoff Qty		Labor Amount	Material Amount	Subcontract Amount	Subcontract Name	Equipment Amount	Other Amount	Total Unit Cost	Total Amount
03 11 13.800		*06" CIP Wall*										
	2550	C.I.P. concrete forms, wall, job built, plywood, over 8' to 16' high, 4 use, includes erecting, bracing, stripping and cleaning	9,048.00	sfca	133,058	15,405	-		-	-	16.408 /sfca	148,463
	5200	Chamfer strip, wood, 3/4" wide	453.00	lf	852	109	-		-	-	2.122 /lf	961
	1400	Tie cones, plastic, for coil tie system, for CIP wall forms, 1/2" bolt diameter x 1" setback length, includes material only	8.00	c	-	894	-		-	-	111.786 /c	894
n	3010	Waterstop, rubber, center bulb, 1/4" thick x 6" wide_WALLS	383.00	lf	2,608	4,940	-		-	-	19.708 /lf	7,548
	0100	Splice rebar, standard, self-aligning type, taper threaded, #4 bars, includes holding rebar in place while splicing	184.80	ea	3,370	4,068	-		-	-	40.247 /ea	7,438
n	2020	Reinforcing steel, unload and sort, add to base_WALLS	16.80	ton	1,265	-	-		550	-	108.052 /ton	1,815
n	2214	Reinforcing steel, crane cost for handling, average, add_WALLS	16.80	ton	1,375	-	-		598	-	117.449 /ton	1,973
	0700	Reinforcing steel, in place, walls, #3 to #7, A615, grade 60, incl labor for accessories, excl material for accessories	16.80	ton	24,219	41,894	-		-	-	3,935.287 /ton	66,113
	5100	Structural concrete, placing, walls, pumped, 12" thick, includes leveling (strike off) & consolidation, excludes material	168.00	cy	10,542	-	-		1,184	-	69.798 /cy	11,726
	5100	Structural concrete, placing, walls, pumped, 12" thick, includes leveling (strike off) & consolidation, excludes material	16.80	cy	1,054	-	-		118	-	69.797 /cy	1,173
n	0525	Struct WALLS concrete,ready mix,normal wt,4500 psi,includes local aggregate,sand,portland cement and water,delivered, includes all additives	16.80	cy	-	6,645	-		-	-	395.55 /cy	6,645
n	0525	Struct WALLS concrete,ready mix,normal wt,4500 psi,includes local aggregate,sand,portland cement and water,delivered, includes all additives	168.00	CY	-	66,453	-		-	-	395.551 /CY	66,453
n	0210	Control joint, clean out control joint of debris_WALLS	227.00	lf	35	-	-			-	0.155 /lf	35
n	0366	Control joint, joint sealant, polyurethane, 1/4" x 1/4" (308 LF/Gal)_WALLS	227.00	lf	783	62	-		-	-	3.722 /lf	845
	0020	Concrete finishing, walls, includes breaking ties and patching voids	9,048.00	sf	15,594	622	-		-	-	1.792 /sf	16,217
	0050	Concrete finishing, walls, burlap rub with grout, includes breaking ties and patching voids	4,524.00	sf	9,357	311	-		-	-	2.137 /sf	9,668
		03 11 13.800 06" CIP Wall			*209,088*	*142,732*			*2,450*		*2,108.750/CY*	*354,270*
		168.00 CY										
		1,727.631 Labor hours										
		43.125 Equipment hours										
		03 11 13.800.10 Exterior Concrete Stair Wall, 29' High x 156 LF			*209,088*	*142,732*	*0*		*2,450*	*0*	*2,108.750/CY*	*354,270*
		168.00 CY										
		1,727.631 Labor hours										

AACE Classification Accuracy Range

Upper Range +50% **Lower Range -30%**

Central Kitsap Treatment Plant Solids Handling

Kitsap County

Detail Report with Contractor Markups

Item		Description	Takeoff Qty		Labor Amount	Material Amount	Subcontract Amount	Subcontract Name	Equipment Amount	Other Amount	Total Unit Cost	Total Amount
		03 11 13.800.10 Exterior Concrete Stair Wall, 29' High x 156 LF			*209,088*	*142,732*	*0*		*2,450*	*0*	*2,108.750/CY*	*354,270*
		168.00 CY										
		1,727.631 Labor hours										
		43.125 Equipment hours										
03 11 13.803.10		*Concrete Tank Wall, Add Tanks Wall Height - Allowance*										
03 11 13.803		*10" CIP Wall*										
	0500	C.I.P. concrete forms, wall, wood bulkhead with 2 piece keyway, 1 use, includes erecting, bracing, stripping and cleaning	630.00	lf	13,810	3,684	-		-	-	27.767 /lf	17,493
	2550	C.I.P. concrete forms, wall, job built, plywood, over 8' to 16' high, 4 use, includes erecting, bracing, stripping and cleaning	25,200.00	sfca	370,586	42,905	-		-	-	16.408 /sfca	413,491
	5200	Chamfer strip, wood, 3/4" wide	1,260.00	lf	2,370	303	-		-	-	2.122 /lf	2,673
	1400	Tie cones, plastic, for coil tie system, for CIP wall forms, 1/2" bolt diameter x 1" setback length, includes material only	21.00	c	-	2,348	-		-	-	111.786 /c	2,348
n	3010	Waterstop, rubber, center bulb, 1/4" thick x 6" wide_WALLS	1,050.00	lf	7,150	13,543	-		-	-	19.708 /lf	20,693
	0100	Splice rebar, standard, self-aligning type, taper threaded, #4 bars, includes holding rebar in place while splicing	855.80	ea	15,604	18,839	-		-	-	40.247 /ea	34,443
n	2020	Reinforcing steel, unload and sort, add to base_WALLS	77.80	ton	5,859	-	-		2,548	-	108.051 /ton	8,406
n	2214	Reinforcing steel, crane cost for handling, average, add_WALLS	77.80	ton	6,368	-	-		2,769	-	117.449 /ton	9,138
	0700	Reinforcing steel, in place, walls, #3 to #7, A615, grade 60, incl labor for accessories, excl material for accessories	77.80	ton	112,156	194,009	-		-	-	3,935.286 /ton	306,165
	5100	Structural concrete, placing, walls, pumped, 12" thick, includes leveling (strike off) & consolidation, excludes material	77.80	cy	4,882	-	-		548	-	69.798 /cy	5,430
	5100	Structural concrete, placing, walls, pumped, 12" thick, includes leveling (strike off) & consolidation, excludes material	778.00	cy	48,822	-	-		5,481	-	69.798 /cy	54,303
n	0525	Struct WALLS concrete,ready mix,normal wt,4500 psi,includes local aggregate,sand,portland cement and water,delivered, includes all additives	77.80	cy	-	30,774	-		-	-	395.551 /cy	30,774
n	0525	Struct WALLS concrete,ready mix,normal wt,4500 psi,includes local aggregate,sand,portland cement and water,delivered, includes all additives	778.00	CY	-	307,739	-		-	-	395.551 /CY	307,739
n	0210	Control joint, clean out control joint of debris_WALLS	630.00	lf	97	-	-			-	0.155 /lf	97
n	0366	Control joint, joint sealant, polyurethane, 1/4" x 1/4" (308 LF/Gal)_WALLS	630.00	lf	2,172	173	-		-	-	3.722 /lf	2,345
	0020	Concrete finishing, walls, includes breaking ties and patching voids	25,200.00	sf	43,433	1,734	-		-	-	1.792 /sf	45,166

Central Kitsap Treatment Plant Solids Handling

Kitsap County

Detail Report with Contractor Markups

Item		Description	Takeoff Qty		Labor Amount	Material Amount	Subcontract Amount	Subcontract Name	Equipment Amount	Other Amount	Total Unit Cost	Total Amount
03 11 13.803		*10" CIP Wall*										
	0050	Concrete finishing, walls, burlap rub with grout, includes breaking ties and patching voids	12,600.00	sf	26,060	867	-		-	-	2.137 /sf	26,927
		03 11 13.803 10" CIP Wall			*659,369*	*616,917*			*11,346*		*1,655.055/CY*	*1,287,632*
		778.00 CY										
		5,433.205 Labor hours										
		199.709 Equipment hours										
		03 11 13.803.10 Concrete Tank Wall, Add Tanks Wall Height - Allowance			*659,369*	*616,917*	*0*		*11,346*	*0*	*1,655.055/CY*	*1,287,632*
		778.00 CY										
		5,433.205 Labor hours										
		199.709 Equipment hours										
03 41 33.000.10		*Double Tee Roof, 243 SF*										
03 41 33.000		*Precast and Prestressed Concrete*										
	0300	Precast tees, double, floor, 30' span, prestressed	243.00	SF	490	5,955	-		192	-	27.315 /SF	6,638
		03 41 33.000 Precast and Prestressed Concrete			*490*	*5,955*			*192*		*27.315/SF*	*6,638*
		243.00 SF										
		3.645 Labor hours										
		0.405 Equipment hours										
		03 41 33.000.10 Double Tee Roof, 243 SF			*490*	*5,955*	*0*		*192*	*0*	*27.315/SF*	*6,638*
		243.00 SF										
		3.645 Labor hours										
		0.405 Equipment hours										
		DIVISION 03 CONCRETE			**1,214,818**	**1,502,678**	**0**		**43,602**	**0**	**1,377.106/CY**	**2,761,098**
		2,005.00 CY										
		9,940.695 Labor hours										
		670.497 Equipment hours										
DIVISION 04		**MASONRY**										
04 22 00.212.10		*CMU Block Split-Face, 12" Thick x 10' High x 65 LF*										
04 22 00.212		*Concrete Masonry Unit (12" CMU) - Exterior*										
	0090	Scaffolding, steel tubular, regular, labor only to erect & dismantle, building exterior, wall face, 6'-4" x 5' frames, 1 to 5 stories, excludes planks	7.00	csf	2,900	-	-		-	-	414.239 /csf	2,900
	0906	Scaffolding, steel tubular, regular, rent/month only for complete system for face of walls, 6' -4" x 5' frames, excludes planks	7.00	csf	-	1,144	-		-	-	163.491 /csf	1,144

Central Kitsap Treatment Plant Solids Handling

Kitsap County

Detail Report with Contractor Markups

Item		Description	Takeoff Qty		Labor Amount	Material Amount	Subcontract Amount	Subcontract Name	Equipment Amount	Other Amount	Total Unit Cost	Total Amount
04 22 00.212		*Concrete Masonry Unit (12" CMU) - Exterior*										
	2850	Scaffolding, steel tubular, regular, accessory, plank, rent/mo, 2" x 10" x 16' long	15.00	ea	-	297	-		-	-	19.797 /ea	297
	0060	Grout, bond beams and lintels, 8" deep, 12" thick, 0.30 CF per LF, pumped, excludes blockwork	65.00	lf	250	204	-		23	-	7.323 /lf	476
	0350	Grout, concrete masonry unit (CMU) cores, 12" thick, 0.422 CF/SF, pumped, excludes blockwork	650.00	SF	4,057	2,868	-		371	-	11.223 /SF	7,295
	0020	Masonry reinforcing bars, #5 and #6 reinforcing steel bars, placed horizontally, ASTM A615	214.786	lb	291	309	-		-	-	2.794 /lb	600
	0060	Masonry reinforcing bars, #5 and #6 reinforcing steel bars, placed vertically, ASTM A615	805.448	lb	1,345	1,158	-		-	-	3.107 /lb	2,503
n	0150	Concrete block,bond beam,normal weight,2000 psi,12"x8"x16",includes mortar,excludes scaffolding,horizontal reinforcing,vertical reinforcing and grout	65.00	lf	756	781	-		-	-	23.648 /lf	1,537
	6250	Concrete block, decorative, split face or scored split face, 2000 psi, 12" x 8" x 16", excludes scaffolding, grout and reinforcing	65.00	sf	1,428	826	-		-	-	34.678 /sf	2,254
	6250	Concrete block, decorative, split face or scored split face, 2000 psi, 12" x 8" x 16", excludes scaffolding, grout and reinforcing	650.00	sf	14,282	8,258	-		-	-	34.678 /sf	22,540
	6550	Concrete block, decorative, split face or scored split face, 12" thick, for special deeper colors, add	65.00	sf	-	111	-		-	-	1.714 /sf	111
	6550	Concrete block, decorative, split face or scored split face, 12" thick, for special deeper colors, add	650.00	sf	-	1,114	-		-	-	1.714 /sf	1,114
		04 22 00.212 Concrete Masonry Unit (12" CMU) - Exterior			*25,308*	*17,071*			*393*		*65.803/SF*	*42,772*
		650.00 SF										
		200.790 Labor hours										
		8.625 Equipment hours										
		04 22 00.212.10 CMU Block Split-Face, 12" Thick x 10' High x 65 LF			*25,308*	*17,071*	*0*		*393*	*0*	*65.803/SF*	*42,772*
		650.00 SF										
		200.790 Labor hours										
		8.625 Equipment hours										
		DIVISION 04 MASONRY			**25,308**	**17,071**	**0**		**393**	**0**		**42,772**
		200.790 Labor hours										
		8.625 Equipment hours										

DIVISION 05 METALS

05 50 00.315.05 Stairs

05 50 00.315		*Metal Stairs - Aluminum*										
	0050	Stair, shop fabricated, steel, 4'-0" W, incl pipe railing, stringers, grating treads w/ safety nosing, per riser	84.00	RISR	13,739	85,213	-		797	-	1,187.490 /RISR	99,749

AACE Classification Accuracy Range

Upper Range +50% **Lower Range -30%**

Central Kitsap Treatment Plant Solids Handling

Kitsap County

Detail Report with Contractor Markups

Item		Description	Takeoff Qty		Labor Amount	Material Amount	Subcontract Amount	Subcontract Name	Equipment Amount	Other Amount	Total Unit Cost	Total Amount
05 50 00.315		*Metal Stairs - Aluminum*										
	0132	Floor grating, aluminum, 1-1/2" x 3/16" bearing bars @ 1-3/16" O.C., cross bars @ 4" O.C., up to 300 S.F., field fabricated from panels	168.00	sf	1,178	15,223	-		68	-	98.027 /sf	16,468
		05 50 00.315 Metal Stairs - Aluminum			*14,917*	*100,435*			*865*		*1,383.543/RISR*	*116,218*
		84.00 RISR										
		97.280 Labor hours										
		24.320 Equipment hours										
		05 50 00.315.05 Stairs			*14,917*	*100,435*	*0*		*865*	*0*	*1,383.543/RISR*	*116,218*
		84.00 RISR										
		97.280 Labor hours										
		24.320 Equipment hours										
05 52 02.002.05		*Hand Railing, 241 LF*										
05 52 02.002		*Aluminum Railings - 3 Rail*										
	0210	Railing, pipe, aluminum, clear finish, 3 rails, 3'-6" high, posts @ 5' O.C., 1-1/2" dia, shop fabricated	241.00	LF	8,632	44,149	-		501	-	221.084 /LF	53,281
		05 52 02.002 Aluminum Railings - 3 Rail			*8,632*	*44,149*			*501*		*221.084/LF*	*53,281*
		241.00 LF										
		56.292 Labor hours										
		14.073 Equipment hours										
		05 52 02.002.05 Hand Railing, 241 LF			*8,632*	*44,149*	*0*		*501*	*0*	*221.084/LF*	*53,281*
		241.00 LF										
		56.292 Labor hours										
		14.073 Equipment hours										
		DIVISION 05 METALS			**23,549**	**144,584**	**0**		**1,366**	**0**		**169,499**
		153.572 Labor hours										
		38.393 Equipment hours										
DIVISION 07		**THERMAL, MOISTURE PROTECTION**										
07 51 00.000.10		*Built Up Roofing System PVC, 243 SF*										
07 51 00.000		*Built-Up Roofing System (BUR)*										
	0800	Aluminum coping, stock units, for 12" wall, excludes scaffolding	72.00	lf	2,403	442	-		-	-	39.515 /lf	2,845
	2780	2" x 8" miscellaneous wood blocking, to steel construction, per M.B.F.	0.072	mbf	511	206	-		-	-	9,960.139 /mbf	717
	2780	2" x 8" miscellaneous wood blocking, to steel construction, per M.B.F.	0.287	mbf	2,038	820	-		-	-	9,960.14 /mbf	2,859
	2700	Elastomeric sheet waterproofing, polyvinyl chloride sheets, plain, 30 mils thick	243.00	SF	1,153	149	-		-	-	5.359 /SF	1,302

Central Kitsap Treatment Plant Solids Handling

Kitsap County

Detail Report with Contractor Markups

Item	Description	Takeoff Qty		Labor Amount	Material Amount	Subcontract Amount	Subcontract Name	Equipment Amount	Other Amount	Total Unit Cost	Total Amount
07 51 00.000	*Built-Up Roofing System (BUR)*										
1725	Polyisocyanurate insulation, for roof decks, 2" thick, 2#/CF density, fastening excluded	243.00	sf	225	483	-		-	-	2.915 /sf	708
1745	Polyisocyanurate insulation, for roof decks, 3" thick, 2#/CF density, fastening excluded	243.00	sf	248	723	-		-	-	3.995 /sf	971
0825	Asphalt shingles, #30 felt underlayment	2.00	sq	46	46	-		-	-	46.005 /sq	92
0100	Sheet metal flashing, aluminum, flexible, mill finish, .032" thick, including up to 4 bends	125.00	sf	1,145	1,409	-		-	-	20.43 /sf	2,554
	07 51 00.000 Built-Up Roofing System (BUR)			*7,769*	*4,279*					*49.580/SF*	*12,048*
	243.00 SF										
	60.808 Labor hours										
	07 51 00.000.10 Built Up Roofing System PVC, 243 SF			*7,769*	*4,279*	*0*		*0*	*0*	*49.580/SF*	*12,048*
	243.00 SF										
	60.808 Labor hours										
	DIVISION 07 THERMAL, MOISTURE PROTECTION			**7,769**	**4,279**	**0**		**0**	**0**	**49.580/SF**	**12,048**
	243.00 SF										
	60.808 Labor hours										

DIVISION 08 OPENINGS

08 11 00.060.35 *Exterior Door, 6' x 7'*

Item	Description	Takeoff Qty		Labor Amount	Material Amount	Subcontract Amount	Subcontract Name	Equipment Amount	Other Amount	Total Unit Cost	Total Amount
08 11 00.060	*Metal Doors & Frames (6070)*										
3620	Frames, steel, knock down, hollow metal, 14 gauge, up to 5-3/4" D, 7'-0" H, 6'-0" W, double	3.00	EA	552	1,389	-		-	-	647.00 /EA	1,941
5100	Doors, aluminum, commercial entrance, flush panel doors, pair of, 3'-0" x 7'-0", incl. hinges, push/pull, deadlock, cylinder, threshold, excl. glazing	3.00	pr	3,631	9,603	-		-	-	4,411.20 /pr	13,234
3000	Door hardware, panic device, narrow stile, mortise bar, exit only	6.00	ea	1,657	7,091	-		-	-	1,458.033 /ea	8,748
0011	Thresholds, aluminum, 3' long door saddles	18.00	lf	414	427	-		-	-	46.749 /lf	841
1430	Door hardware, hinges, full mortise, high frequency, brass base, US10, 4-1/2" x 4-1/2"	9.00	pr	-	1,073	-		-	-	119.173 /pr	1,073
1200	Paints & coatings, exterior, door & frame, one side, flush, 1 coat, 3' x 7'	6.00	ea	334	27	-		-	-	60.137 /ea	361
	08 11 00.060 Metal Doors & Frames (6070)			*6,588*	*19,609*					*8,732.557/EA*	*26,198*
	3.00 EA										
	45.824 Labor hours										

Central Kitsap Treatment Plant Solids Handling

Kitsap County

Detail Report with Contractor Markups

Item	Description	Takeoff Qty		Labor Amount	Material Amount	Subcontract Amount	Subcontract Name	Equipment Amount	Other Amount	Total Unit Cost	Total Amount
	08 11 00.060.35 Exterior Door, 6' x 7'			*6,588*	*19,609*	*0*		*0*	*0*	*8,732.557/EA*	*26,198*
	3.00 EA										
	45.824 Labor hours										
	DIVISION 08 OPENINGS			**6,588**	**19,609**	**0**		**0**	**0**	**8,732.557/EA**	**26,198**
	3.00 EA										
	45.824 Labor hours										
DIVISION 13	**SPECIAL CONSTRUCTION**										
13.61.04.010	*Gas holding membrane cover*										
13 61 04.000	*Digester Membrane Cover*										
9103	Specialty biogas membrane cover - digester gas containment	2.00	ea		2,379,502				-	1,189,750.805 /ea	2,379,502
9103	Install digester membrane cover	2.00	ea	106,521		54,594		63,693	-	112,403.67 /ea	224,807
	13 61 04.000 Digester Membrane Cover			*106,521*	*2,379,502*	*54,594*		*63,693*			*2,604,309*
	800.00 Labor hours										
	200.00 Equipment hours										
	13.61.04.010 Gas holding membrane cover			*106,521*	*2,379,502*	*54,594*		*63,693*	*0*		*2,604,309*
	800.00 Labor hours										
	200.00 Equipment hours										
13.61.04.015	*Cover Blowers*										
13 61 04.000	*Digester Membrane Cover*										
0140	Air and gas handling equipment, blowers and system components, rotary lobe blowers	2.00	EA	6,990	29,547	-		2,802	-	19,669.815 /EA	39,340
	13 61 04.000 Digester Membrane Cover			*6,990*	*29,547*			*2,802*			*39,340*
	44.00 Labor hours										
	44.00 Equipment hours										
	13.61.04.015 Cover Blowers			*6,990*	*29,547*	*0*		*2,802*	*0*	*19,669.815/EA*	*39,340*
	2.00 EA										
	44.00 Labor hours										
	44.00 Equipment hours										
	DIVISION 13 SPECIAL CONSTRUCTION			**113,512**	**2,409,048**	**54,594**		**66,495**	**0**		**2,643,649**
	844.00 Labor hours										
	244.00 Equipment hours										
DIVISION 31	**EARTHWORK**										

Central Kitsap Treatment Plant Solids Handling

Kitsap County

Detail Report with Contractor Markups

Item		Description	Takeoff Qty		Labor Amount	Material Amount	Subcontract Amount	Subcontract Name	Equipment Amount	Other Amount	Total Unit Cost	Total Amount
31.23.10.P005		*Excavation, Backfill, and Haul Off-Site*										
31 23 10.000		*Excavation, Backfill, and Haul Off-Site*										
n	6260	Strt excvt for minor strtr,bank measr,for sprd and mat ftngs,elvtr pits,and small bldng fndtn,sandy clay loam,2 cy bucket,machin excvtn,hydrlc backhoe	8,950.00	CY	83,210	-	-		70,021	-	17.121 /CY	153,231
	4010	Backfill, structural, sandy clay & loam, 200 H.P. dozer, 50' haul, from existing stockpile, excludes compaction	4,110.00	CY	2,584	-	-		4,510	-	1.726 /CY	7,094
	4060	Borrow, common earth, 1-1/2 C.Y. bucket, loading and/or spreading, front end loader, wheel-mounted	4,110.00	CY	6,488	59,835	-		3,188	-	16.912 /CY	69,510
n	0560	Hauling,excavated borrow material,loose cubic yards,20 mile round trip,0.4 load/hr,base wide rate,12 cy truck,highway haulers,excludes loading	6,025.00	CY	151,732	-	-		157,223	-	51.279 /CY	308,955
	0400	Compaction, structural, select fill, 8" lifts, sheepsfoot or wobbly wheel roller	4,110.00	CY	4,195	-	-		6,561	-	2.617 /CY	10,757
		31 23 10.000 Excavation, Backfill, and Haul Off-Site			*248,210*	*59,835*			*241,503*		*20.126/CY*	*549,547*
		27,305.00 CY										
		2,002.851 Labor hours										
		1,636.709 Equipment hours										
		31.23.10.P005 Excavation, Backfill, and Haul Off-Site			*248,210*	*59,835*	*0*		*241,503*	*0*	*20.126/CY*	*549,547*
		27,305.00 CY										
		2,002.851 Labor hours										
		1,636.709 Equipment hours										
31.23.19.P025		*Well Point Detwatering - 12 Months*										
31 23 19.020		*Dewatering - Wellpoint*										
n	1300	Wellpoints,complete installation,2"wellpoints,5'oc, 500'long header,8"diameter,includes one month operation,equipment rental,fuel and removal system	600.00	hdr	237,636	58,961	-		-	-	494.329 /hdr	296,597
	1400	Wellpoints, each additional month, 2" wellpoints, 5' O.C., 500' long header, 8" diameter, includes operation, equipment rental, and fuel	6,600.00	hdr	1,328,876	462,408	-		-	-	271.407 /hdr	1,791,283
		31 23 19.020 Dewatering - Wellpoint			*1,566,512*	*521,369*					*173,990.027/MO*	*2,087,880*
		12.00 MO										
		11,906.639 Labor hours										
		31.23.19.P025 Well Point Detwatering - 12 Months			*1,566,512*	*521,369*	*0*		*0*	*0*	*173,990.027/MO*	*2,087,880*
		12.00 MO										
		11,906.639 Labor hours										

AACE Classification Accuracy Range

Upper Range +50% **Lower Range -30%**

Central Kitsap Treatment Plant Solids Handling

Kitsap County

Detail Report with Contractor Markups

Item		Description	Takeoff Qty		Labor Amount	Material Amount	Subcontract Amount	Subcontract Name	Equipment Amount	Other Amount	Total Unit Cost	Total Amount
		DIVISION 31 EARTHWORK			**1,814,721**	**581,203**	**0**		**241,503**	**0**	**96.591/CY**	**2,637,427**
		27,305.00 CY										
		13,909.490 Labor hours										
		1,636.709 Equipment hours										
DIVISION 46		**WATER AND WASTEWATER EQUIPMENT**										
43.23.57.010		*Septage Equalization Pumps*										
43 23 57.000		*Progressive Cavity Pumps*										
n	0010	Progressive cavity transfer pump	2.00	EA	24,145	120,385	-		6,530		75,530.315 /EA	151,061
n	0010	Feed flow control valve system	1.00	LS	7,244	137,583	-		1,381		146,207.87 /LS	146,208
		43 23 57.000 Progressive Cavity Pumps			*31,389*	*257,968*			*7,912*		*148,634.25 /EA*	*297,269*
		2.00 EA										
		208.00 Labor hours										
		48.00 Equipment hours										
		43.23.57.010 Septage Equalization Pumps			*31,389*	*257,968*	*0*		*7,912*	*0*	*148,634.25 /EA*	*297,269*
		2.00 EA										
		208.00 Labor hours										
		48.00 Equipment hours										
43.23.57.037		*Centrifuge feed and transfer pumps*										
43 23 57.000		*Progressive Cavity Pumps*										
n	0010	Progressive cavity feed pumps pump 40 hp	4.00	EA	48,291	343,957	-		13,061		101,327.098 /EA	405,308
		43 23 57.000 Progressive Cavity Pumps			*48,291*	*343,957*			*13,061*		*101,327.098/EA*	*405,308*
		4.00 EA										
		320.00 Labor hours										
		64.00 Equipment hours										
		43.23.57.037 Centrifuge feed and transfer pumps			*48,291*	*343,957*	*0*		*13,061*	*0*	*101,327.098/EA*	*405,308*
		4.00 EA										
		320.00 Labor hours										
		64.00 Equipment hours										
43.23.58.010		*Sludge Recirc Pumps*										
43 23 58.000		*Rotary Lobe Pumps*										
	1000	Rotary Lobe pumps	2.00	ea	7,460	87,203	-		1,263	-	47,963.185 /ea	95,926

Central Kitsap Treatment Plant Solids Handling

Kitsap County

Detail Report with Contractor Markups

Item	Description	Takeoff Qty		Labor Amount	Material Amount	Subcontract Amount	Subcontract Name	Equipment Amount	Other Amount	Total Unit Cost	Total Amount
	43 23 58.000 Rotary Lobe Pumps			*7,460*	*87,203*			*1,263*			*95,926*
	64.00 Labor hours										
	16.00 Equipment hours										
	43.23.58.010 Sludge Recirc Pumps			*7,460*	*87,203*	*0*		*1,263*	*0*		*95,926*
	64.00 Labor hours										
	16.00 Equipment hours										
46.73.33.010	*Rotamix Mix System*										
46 73 33.010	*Digester Mixing System*										
0008	Mixing Assembly w/ Chopper pumps	3.00	ea	57,147	474,661	-		23,973		185,260.487 /ea	555,781
0008	Rotamix Spare parts	2.00	ea		61,912	-				30,956.145 /ea	61,912
0008	Rotating sub-assembly	1.00	ea		29,236	-				29,236.39 /ea	29,236
	46 73 33.010 Digester Mixing System			*57,147*	*565,810*			*23,973*			*646,930*
	480.00 Labor hours										
	180.00 Equipment hours										
	46.73.33.010 Rotamix Mix System			*57,147*	*565,810*	*0*		*23,973*	*0*		*646,930*
	480.00 Labor hours										
	180.00 Equipment hours										
46.73.41.010	*Heat Exchanger - Recirc Digested Sludge*										
46 73 41.020	*Digester - Heat Exchanger*										
0100	Digester, Heat Exchangers	2.00	EA	19,589	120,385			9,042		74,508.095 /EA	149,016
	46 73 41.020 Digester - Heat Exchanger			*19,589*	*120,385*			*9,042*			*149,016*
	144.00 Labor hours										
	144.00 Equipment hours										
	46.73.41.010 Heat Exchanger - Recirc Digested Sludge			*19,589*	*120,385*	*0*		*9,042*	*0*	*74,508.095/EA*	*149,016*
	2.00 EA										
	144.00 Labor hours										
	144.00 Equipment hours										
	DIVISION 46 WATER AND WASTEWATER EQUIPMENT			**163,876**	**1,375,323**	**0**		**55,251**	**0**	**199,306.199/EA**	**1,594,450**
	8.00 EA										
	1,216.00 Labor hours										
	452.00 Equipment hours										
	600 DIGESTERS 3&4 - NEW W/ CONTROL BUILDING			***3,370,141***	***6,053,796***	***54,594***		***408,610***	***0***	***7,062,243.164/MGD***	***9,887,140***
	1.40 MGD										
	26,371.179 Labor hours										

AACE Classification Accuracy Range

Upper Range +50% **Lower Range -30%**

Central Kitsap Treatment Plant Solids Handling

Kitsap County

Detail Report with Contractor Markups

Item	Description	Takeoff Qty	Labor Amount	Material Amount	Subcontract Amount	Subcontract Name	Equipment Amount	Other Amount	Total Unit Cost	Total Amount
	600 DIGESTERS 3&4 - NEW W/ CONTROL BUILDING		***3,370,141***	***6,053,796***	***54,594***		***408,610***	***0***	***7,062,243.164/MGD***	***9,887,140***
	1.40 MGD									
	26,371.179 Labor hours									
	3,050.224 Equipment hours									

630 DIGESTER CONTROL BUILDING

DIVISION 03 **CONCRETE**

03 11 13.155.05 *Concrete Footing, 12" High x 2' Wide x 226 LF*

03 11 13.155		*Cont. Footing 62" x 24"*									
n	3001	C.I.P. concrete forms, SIDEWALK, edge, wood, to 6" high, 4 use, includes erecting, bracing, stripping and cleaning	456.00	lf	2,866	227	-	-	-	6.783 /lf	3,093
n	0301	Welded wire fabric, sheets, 6 x 6 - W2.9 x W2.9 (6 x 6) 42 lb. per C.S.F., A185_SIDEWALK	5.00	csf	373	206	-	-	-	115.84 /csf	579
n	4301	Structural concrete, placing, sidewalk, direct chute, up to 6" thick, includes vibrating, excludes material	1.70	cy	78	-	-	1	-	46.594 /cy	79
n	4301	Structural concrete, placing, sidewalk, direct chute, up to 6" thick, includes vibrating, excludes material	17.00	cy	778	-	-	14	-	46.602 /cy	792
n	1120	Struct SIDEWALK concrete,ready mix,normal wt,4000 psi,includes local aggregate,sand,portland cement and water,delivered, includes all additives	1.70	cy	-	629	-	-	-	369.76 /cy	629
n	1120	Struct SIDEWALK concrete,ready mix,normal wt,4000 psi,includes local aggregate,sand,portland cement and water,delivered, includes all additives	17.00	CY	-	6,286	-	-	-	369.754 /CY	6,286
n	0152	Concrete finishing, floors, manual screed, bull float, manual float, broom finish_SIDEWALKS	452.00	sf	652	-	-	-	-	1.443 /sf	652
n	0123	Control joint, concrete floor slab, sawcut in green concrete, 1" depth_SIDEWALKS	113.00	lf	105	6	-	11	-	1.075 /lf	122
n	0216	Control joint, clean out control joint of debris_SIDEWALKS	113.00	lf	17	-	-		-	0.155 /lf	17
n	0312	Concrete surface treatment, curing, sprayed membrane compound_SIDEWALKS	5.00	csf	85	64	-	-	-	29.834 /csf	149
n	1111	Fill, gravel fill, compacted, under floor slabs, alternate pricing method, 6" deep_SIDEWALK	10.00	ecy	319	550	-	27	-	89.644 /ecy	896
	03 11 13.155 Cont. Footing 62" x 24"				*5,274*	*7,968*		*52*		*782.059/CY*	*13,295*
	17.00 CY										
	45.996 Labor hours										
	3.672 Equipment hours										

AACE Classification Accuracy Range

Upper Range +50% **Lower Range -30%**

Central Kitsap Treatment Plant Solids Handling

Kitsap County

Detail Report with Contractor Markups

Item		Description	Takeoff Qty		Labor Amount	Material Amount	Subcontract Amount	Name	Equipment Amount	Other Amount	Total Unit Cost	Total Amount
		03 11 13.155.05 Concrete Footing, 12" High x 2' Wide x 226 LF			*5,274*	*7,968*	*0*		*52*	*0*	*782.059/CY*	*13,295*
		17.00 CY										
		45.996 Labor hours										
		3.672 Equipment hours										
03 11 13.303.20		*Roof Slab, 12" Thick x 3,190 SF*										
03 11 13.303		*12" Elevated Slab*										
	3050	C.I.P. concrete forms, slab on grade, edge, wood, 7" to 12" high, 4 use, includes erecting, bracing, stripping and cleaning	225.92	sfca	1,958	474	-		-	-	10.767 /sfca	2,432
n	9015	C.I.P. concrete forms, bulkhead for slab on grade w/ keyway, up to 12", exp metal, includes erecting, bracing, stripping and cleaning	159.50	sfca	824	123	-		-	-	5.938 /sfca	947
n	2050	Reinforcing steel, unload and sort, add to base_SLAB ON GRADE	10.413	ton	784	-	-		341	-	108.050 /ton	1,125
	0600	Reinforcing steel, in place, slab on grade, #3 to #7, A615, grade 60, incl labor for accessories, excl material for accessories	10.413	ton	19,580	25,967	-		-	-	4,374.034 /ton	45,547
	2220	Reinforcing steel, crane cost for handling, 90 picks/day, up to 0.5 Ton/day	10.413	ton	2,240	-	-		974	-	308.717 /ton	3,215
	4650	Structural concrete, placing, slab on grade, pumped, over 6" thick, includes leveling (strike off) & consolidation, excludes material	11.90	cy	444	-	-		50	-	41.501 /cy	494
	4650	Structural concrete, placing, slab on grade, pumped, over 6" thick, includes leveling (strike off) & consolidation, excludes material	119.00	cy	4,440	-	-		499	-	41.502 /cy	4,939
n	0725	Struct SLAB ON GRADE concrete,ready mix,normal wt,4500 psi,includes local aggregate,sand,portland cement and water,delivered, includes all additives	11.90	cy	-	4,707	-		-	-	395.550 /cy	4,707
n	0725	Struct SLAB ON GRADE concrete,ready mix,normal wt,4500 psi,includes local aggregate,sand,portland cement and water,delivered, includes all additives	119.00	CY	-	47,071	-		-	-	395.551 /CY	47,071
n	0255	Concrete finishing, floors, manual screed, bull float, machine float & steel trowel (walk-behind)_SOG	3,189.99	sf	4,965	-	-		270	-	1.641 /sf	5,235
n	0122	Control joint, concrete floor slab, sawcut in green concrete, 1" depth_SOG	159.50	lf	148	8	-		15	-	1.075 /lf	172
n	0215	Control joint, clean out control joint of debris_SOG	159.50	lf	25	-	-			-	0.155 /lf	25
n	0367	Control joint, joint sealant, polyurethane, 1/4" x 1/4" (308 LF/Gal)_SOG	318.999	lf	1,100	88	-		-	-	3.722 /lf	1,187
n	0310	Concrete surface treatment, curing, sprayed membrane compound_SOG	31.90	csf	543	409	-		-	-	29.836 /csf	952
	1200	Vapor retarders, building paper, polyethylene vapor barrier, standard, 10 mil (.010" thick)	31.90	sq	851	447	-		-	-	40.704 /sq	1,298
n	1310	Fill, gravel fill, compacted, under floor slabs, alternate pricing method, 12" deep_SOG	136.00	ecy	3,159	7,485	-		264	-	80.204 /ecy	10,908

AACE Classification Accuracy Range

Upper Range +50% **Lower Range -30%**

Central Kitsap Treatment Plant Solids Handling

Kitsap County

Detail Report with Contractor Markups

	Item	Description	Takeoff Qty		Labor Amount	Material Amount	Subcontract Amount	Subcontract Name	Equipment Amount	Other Amount	Total Unit Cost	Total Amount
03 11 13.303		*12" Elevated Slab*										
n	1136	Hauling, excavated borrow material, loose cubic yards, 20 mile round trip, 0.4 loads/hour, 16.5 c.y. dump trailer, highway haulers, excludes loading	136.00	lcy	2,362	-	-		2,650	-	36.849 /lcy	5,011
		03 11 13.303 12" Elevated Slab			*43,424*	*86,778*			*5,062*		*1,136.674/CY*	*135,264*
		119.00 CY										
		353.920 Labor hours										
		80.940 Equipment hours										
		03 11 13.303.20 Roof Slab, 12" Thick x 3,190 SF			*43,424*	*86,778*	*0*		*5,062*	*0*	*1,136.674/CY*	*135,264*
		119.00 CY										
		353.920 Labor hours										
		80.940 Equipment hours										
03 11 13.504.25		*Concrete Slab, 12" Thick x 3,190 SF*										
03 11 13.504		*12" Slab on Grade*										
	3050	C.I.P. concrete forms, slab on grade, edge, wood, 7" to 12" high, 4 use, includes erecting, bracing, stripping and cleaning	225.92	sfca	1,958	474	-		-	-	10.767 /sfca	2,432
n	9015	C.I.P. concrete forms, bulkhead for slab on grade w/ keyway, up to 12", exp metal, includes erecting, bracing, stripping and cleaning	159.50	sfca	824	123	-		-	-	5.938 /sfca	947
n	2050	Reinforcing steel, unload and sort, add to base_SLAB ON GRADE	10.413	ton	784	-	-		341	-	108.052 /ton	1,125
	0600	Reinforcing steel, in place, slab on grade, #3 to #7, A615, grade 60, incl labor for accessories, excl material for accessories	10.413	ton	19,580	25,967	-		-	-	4,374.033 /ton	45,547
	2220	Reinforcing steel, crane cost for handling, 90 picks/day, up to 0.5 Ton/day	10.413	ton	2,240	-	-		974	-	308.717 /ton	3,215
	4650	Structural concrete, placing, slab on grade, pumped, over 6" thick, includes leveling (strike off) & consolidation, excludes material	11.90	cy	444	-	-		50	-	41.503 /cy	494
	4650	Structural concrete, placing, slab on grade, pumped, over 6" thick, includes leveling (strike off) & consolidation, excludes material	119.00	cy	4,440	-	-		499	-	41.502 /cy	4,939
n	0725	Struct SLAB ON GRADE concrete,ready mix,normal wt,4500 psi,includes local aggregate,sand,portland cement and water,delivered, includes all additives	11.90	cy	-	4,707	-		-	-	395.55 /cy	4,707
n	0725	Struct SLAB ON GRADE concrete,ready mix,normal wt,4500 psi,includes local aggregate,sand,portland cement and water,delivered, includes all additives	119.00	CY	-	47,071	-		-	-	395.551 /CY	47,071
n	0255	Concrete finishing, floors, manual screed, bull float, machine float & steel trowel (walk-behind)_SOG	3,189.99	sf	4,965	-	-		270	-	1.641 /sf	5,235
n	0122	Control joint, concrete floor slab, sawcut in green concrete, 1" depth_SOG	159.50	lf	148	8	-		15	-	1.076 /lf	172

Central Kitsap Treatment Plant Solids Handling

Kitsap County

Detail Report with Contractor Markups

Item		Description	Takeoff Qty		Labor Amount	Material Amount	Subcontract Amount	Subcontract Name	Equipment Amount	Other Amount	Total Unit Cost	Total Amount
03 11 13.504		*12" Slab on Grade*										
n	0215	Control joint, clean out control joint of debris_SOG	159.50	lf	25	-	-			-	0.155 /lf	25
n	0367	Control joint, joint sealant, polyurethane, 1/4" x 1/4" (308 LF/Gal)_SOG	318.999	lf	1,100	88	-		-	-	3.722 /lf	1,187
n	0310	Concrete surface treatment, curing, sprayed membrane compound_SOG	31.90	csf	543	409	-		-	-	29.835 /csf	952
	1200	Vapor retarders, building paper, polyethylene vapor barrier, standard, 10 mil (.010" thick)	31.90	sq	851	447	-		-	-	40.704 /sq	1,298
n	1310	Fill, gravel fill, compacted, under floor slabs, alternate pricing method, 12" deep_SOG	136.00	ecy	3,159	7,485	-		264	-	80.204 /ecy	10,908
n	1136	Hauling, excavated borrow material, loose cubic yards, 20 mile round trip, 0.4 loads/hour, 16.5 c.y. dump trailer, highway haulers, excludes loading	136.00	lcy	2,362	-	-		2,650	-	36.849 /lcy	5,011
		03 11 13.504 12" Slab on Grade			*43,424*	*86,778*			*5,062*		*1,136.674/CY*	*135,264*
		119.00 CY										
		353.920 Labor hours										
		80.940 Equipment hours										
		03 11 13.504.25 Concrete Slab, 12" Thick x 3,190 SF			*43,424*	*86,778*	*0*		*5,062*	*0*	*1,136.674/CY*	*135,264*
		119.00 CY										
		353.920 Labor hours										
		80.940 Equipment hours										
03 11 13.804.40		*Concrete Wall, 16' High x 267 LF*										
03 11 13.804		*12" CIP Wall*										
	0500	C.I.P. concrete forms, wall, wood bulkhead with 2 piece keyway, 1 use, includes erecting, bracing, stripping and cleaning	214.00	lf	4,691	1,251	-		-	-	27.767 /lf	5,942
	2550	C.I.P. concrete forms, wall, job built, plywood, over 8' to 16' high, 4 use, includes erecting, bracing, stripping and cleaning	8,544.00	sfca	125,646	14,547	-		-	-	16.408 /sfca	140,193
	5200	Chamfer strip, wood, 3/4" wide	428.00	lf	805	103	-		-	-	2.122 /lf	908
	1400	Tie cones, plastic, for coil tie system, for CIP wall forms, 1/2" bolt diameter x 1" setback length, includes material only	8.00	c	-	894	-		-	-	111.788 /c	894
n	3010	Waterstop, rubber, center bulb, 1/4" thick x 6" wide_WALLS	481.00	lf	3,275	6,204	-		-	-	19.708 /lf	9,480
	0100	Splice rebar, standard, self-aligning type, taper threaded, #4 bars, includes holding rebar in place while splicing	174.90	ea	3,189	3,850	-		-	-	40.247 /ea	7,039
n	2020	Reinforcing steel, unload and sort, add to base_WALLS	15.90	ton	1,197	-	-		521	-	108.050 /ton	1,718
n	2214	Reinforcing steel, crane cost for handling, average, add_WALLS	15.90	ton	1,302	-	-		566	-	117.450 /ton	1,867
	0700	Reinforcing steel, in place, walls, #3 to #7, A615, grade 60, incl labor for accessories, excl material for accessories	15.90	ton	22,921	39,650	-		-	-	3,935.286 /ton	62,571

Central Kitsap Treatment Plant Solids Handling

Kitsap County

Detail Report with Contractor Markups

	Item	Description	Takeoff Qty		Labor Amount	Material Amount	Subcontract Amount	Subcontract Name	Equipment Amount	Other Amount	Total Unit Cost	Total Amount
03 11 13.804		*12" CIP Wall*										
	5100	Structural concrete, placing, walls, pumped, 12" thick, includes leveling (strike off) & consolidation, excludes material	15.90	cy	998	-	-		112	-	69.799 /cy	1,110
	5100	Structural concrete, placing, walls, pumped, 12" thick, includes leveling (strike off) & consolidation, excludes material	159.00	cy	9,978	-	-		1,120	-	69.798 /cy	11,098
n	0525	Struct WALLS concrete,ready mix,normal wt,4500 psi,includes local aggregate,sand,portland cement and water,delivered, includes all additives	15.90	cy	-	6,289	-		-	-	395.550 /cy	6,289
n	0525	Struct WALLS concrete,ready mix,normal wt,4500 psi,includes local aggregate,sand,portland cement and water,delivered, includes all additives	159.00	CY	-	62,893	-		-	-	395.551 /CY	62,893
n	0210	Control joint, clean out control joint of debris_WALLS	214.00	lf	33	-	-			-	0.155 /lf	33
n	0366	Control joint, joint sealant, polyurethane, 1/4" x 1/4" (308 LF/Gal)_WALLS	214.00	lf	738	59	-		-	-	3.722 /lf	797
	0020	Concrete finishing, walls, includes breaking ties and patching voids	8,544.00	sf	14,726	588	-		-	-	1.792 /sf	15,314
	0050	Concrete finishing, walls, burlap rub with grout, includes breaking ties and patching voids	4,272.00	sf	8,836	294	-		-	-	2.137 /sf	9,129
		03 11 13.804 12" CIP Wall			*198,335*	*136,622*			*2,319*		*2,121.228/CY*	*337,275*
		159.00 CY										
		1,638.628 Labor hours										
		40.815 Equipment hours										
		03 11 13.804.40 Concrete Wall, 16' High x 267 LF			*198,335*	*136,622*	*0*		*2,319*	*0*	*2,121.228/CY*	*337,275*
		159.00 CY										
		1,638.628 Labor hours										
		40.815 Equipment hours										
03 11 13.804.45		*Grade Wall, 12" High x 12" Wide x 534 LF*										
03 11 13.804		*12" CIP Wall*										
	0500	C.I.P. concrete forms, wall, wood bulkhead with 2 piece keyway, 1 use, includes erecting, bracing, stripping and cleaning	27.00	lf	592	158	-		-	-	27.768 /lf	750
	2550	C.I.P. concrete forms, wall, job built, plywood, over 8' to 16' high, 4 use, includes erecting, bracing, stripping and cleaning	1,068.00	sfca	15,706	1,818	-		-	-	16.408 /sfca	17,524
	5200	Chamfer strip, wood, 3/4" wide	54.00	lf	102	13	-		-	-	2.122 /lf	115
	1400	Tie cones, plastic, for coil tie system, for CIP wall forms, 1/2" bolt diameter x 1" setback length, includes material only	1.00	c	-	112	-		-	-	111.78 /c	112
n	3010	Waterstop, rubber, center bulb, 1/4" thick x 6" wide_WALLS	561.00	lf	3,820	7,236	-		-	-	19.708 /lf	11,056
	0100	Splice rebar, standard, self-aligning type, taper threaded, #4 bars, includes holding rebar in place while splicing	22.00	ea	401	484	-		-	-	40.248 /ea	885

Central Kitsap Treatment Plant Solids Handling

Kitsap County

Detail Report with Contractor Markups

Item		Description	Takeoff Qty		Labor Amount	Material Amount	Subcontract Amount	Subcontract Name	Equipment Amount	Other Amount	Total Unit Cost	Total Amount
03 11 13.804		*12" CIP Wall*										
n	2020	Reinforcing steel, unload and sort, add to base_WALLS	2.00	ton	151	-	-		65	-	108.05 /ton	216
n	2214	Reinforcing steel, crane cost for handling, average, add_WALLS	2.00	ton	164	-	-		71	-	117.445 /ton	235
	0700	Reinforcing steel, in place, walls, #3 to #7, A615, grade 60, incl labor for accessories, excl material for accessories	2.00	ton	2,883	4,987	-		-	-	3,935.29 /ton	7,871
	5100	Structural concrete, placing, walls, pumped, 12" thick, includes leveling (strike off) & consolidation, excludes material	2.00	cy	126	-	-		14	-	69.80 /cy	140
	5100	Structural concrete, placing, walls, pumped, 12" thick, includes leveling (strike off) & consolidation, excludes material	20.00	cy	1,255	-	-		141	-	69.798 /cy	1,396
n	0525	Struct WALLS concrete,ready mix,normal wt,4500 psi,includes local aggregate,sand,portland cement and water,delivered, includes all additives	2.00	cy	-	791	-		-	-	395.545 /cy	791
n	0525	Struct WALLS concrete,ready mix,normal wt,4500 psi,includes local aggregate,sand,portland cement and water,delivered, includes all additives	20.00	CY	-	7,911	-		-	-	395.552 /CY	7,911
n	0210	Control joint, clean out control joint of debris_WALLS	27.00	lf	4	-	-			-	0.155 /lf	4
n	0366	Control joint, joint sealant, polyurethane, 1/4" x 1/4" (308 LF/Gal)_WALLS	27.00	lf	93	7	-		-	-	3.722 /lf	101
	0020	Concrete finishing, walls, includes breaking ties and patching voids	1,068.00	sf	1,841	73	-		-	-	1.792 /sf	1,914
	0050	Concrete finishing, walls, burlap rub with grout, includes breaking ties and patching voids	534.00	sf	1,104	37	-		-	-	2.137 /sf	1,141
		03 11 13.804 12" CIP Wall			*28,241*	*23,629*			*292*		*2,608.059/CY*	*52,161*
		20.00 CY										
		232.774 Labor hours										
		5.134 Equipment hours										
		03 11 13.804.45 Grade Wall, 12" High x 12" Wide x 534 LF			*28,241*	*23,629*	*0*		*292*	*0*	*2,608.059/CY*	*52,161*
		20.00 CY										
		232.774 Labor hours										
		5.134 Equipment hours										
03 41 33.000.15		*Double Tee Roof x 3,190 SF*										
03 41 33.000		*Precast and Prestressed Concrete*										
	0300	Precast tees, double, floor, 30' span, prestressed	3,189.99	SF	6,439	78,177	-		2,518	-	27.315 /SF	87,134
		03 41 33.000 Precast and Prestressed Concrete			*6,439*	*78,177*			*2,518*		*27.315/SF*	*87,134*
		3,189.99 SF										
		47.850 Labor hours										
		5.317 Equipment hours										

AACE Classification Accuracy Range

Upper Range +50% **Lower Range -30%**

Central Kitsap Treatment Plant Solids Handling

Kitsap County

Detail Report with Contractor Markups

Item	Description	Takeoff Qty		Labor Amount	Material Amount	Subcontract Amount	Subcontract Name	Equipment Amount	Other Amount	Total Unit Cost	Total Amount
	03 41 33.000.15 Double Tee Roof x 3,190 SF			*6,439*	*78,177*	*0*		*2,518*	*0*	*27.315/SF*	*87,134*
	3,189.99 SF										
	47.850 Labor hours										
	5.317 Equipment hours										
	DIVISION 03 CONCRETE			**325,137**	**419,952**	**0**		**15,305**	**0**	**1,752.059/CY**	**760,394**
	434.00 CY										
	2,673.088 Labor hours										
	216.817 Equipment hours										
DIVISION 07	**THERMAL, MOISTURE PROTECTION**										
07 51 00.000.15	*Built Up Roofing System PVC x 3,190 SF*										
07 51 00.000	*Built-Up Roofing System (BUR)*										
0800	Aluminum coping, stock units, for 12" wall, excludes scaffolding	260.00	lf	8,677	1,597	-		-	-	39.517 /lf	10,274
2780	2" x 8" miscellaneous wood blocking, to steel construction, per M.B.F.	0.26	mbf	1,846	743	-		-	-	9,960.077 /mbf	2,590
2780	2" x 8" miscellaneous wood blocking, to steel construction, per M.B.F.	1.039	mbf	7,378	2,970	-		-	-	9,959.798 /mbf	10,348
2700	Elastomeric sheet waterproofing, polyvinyl chloride sheets, plain, 30 mils thick	3,190.00	SF	15,142	1,952	-		-	-	5.359 /SF	17,095
1725	Polyisocyanurate insulation, for roof decks, 2" thick, 2#/CF density, fastening excluded	3,190.00	sf	2,955	6,345	-		-	-	2.916 /sf	9,301
1745	Polyisocyanurate insulation, for roof decks, 3" thick, 2#/CF density, fastening excluded	3,190.00	sf	3,255	9,489	-		-	-	3.995 /sf	12,745
0825	Asphalt shingles, #30 felt underlayment	32.00	sq	733	740	-		-	-	46.034 /sq	1,473
0100	Sheet metal flashing, aluminum, flexible, mill finish, .032" thick, including up to 4 bends	452.00	sf	4,139	5,095	-		-	-	20.430 /sf	9,235
	07 51 00.000 Built-Up Roofing System (BUR)			*44,127*	*28,933*					*22.903/SF*	*73,060*
	3,190.00 SF										
	350.248 Labor hours										
	07 51 00.000.15 Built Up Roofing System PVC x 3,190 SF			*44,127*	*28,933*	*0*		*0*	*0*	*22.903/SF*	*73,060*
	3,190.00 SF										
	350.248 Labor hours										
	DIVISION 07 THERMAL, MOISTURE PROTECTION			**44,127**	**28,933**	**0**		**0**	**0**	**22.903/SF**	**73,060**
	3,190.00 SF										
	350.248 Labor hours										

AACE Classification Accuracy Range

Upper Range +50% **Lower Range -30%**

Central Kitsap Treatment Plant Solids Handling

Kitsap County

Detail Report with Contractor Markups

Item	Description	Takeoff Qty		Labor Amount	Material Amount	Subcontract Amount	Subcontract Name	Equipment Amount	Other Amount	Total Unit Cost	Total Amount
	DIVISION 07 THERMAL, MOISTURE PROTECTION			**44,127**	**28,933**	**0**		**0**	**0**	**22.903/SF**	**73,060**
	3,190.00 SF										
	350.248 Labor hours										
DIVISION 08	**OPENINGS**										
08 11 00.030.25	*Exterior Door, 3' x 7'*										
08 11 00.030	*Metal Doors & Frames (3070)*										
1000	Frames, steel, knock down, hollow metal, single, 16 ga., up to 4-7/8" deep, 3'-0" x 7'-0"	1.00	EA	138	384	-		-	-	522.21 /EA	522
5050	Doors, aluminum, commercial entrance, flush panel doors, single, 3'-0" x 7'-0", incl. hinges, push/pull, deadlock, cylinder, threshold, excl. glazing	1.00	ea	968	1,694	-		-	-	2,662.24 /ea	2,662
3000	Door hardware, panic device, narrow stile, mortise bar, exit only	1.00	ea	276	1,182	-		-	-	1,458.03 /ea	1,458
0011	Thresholds, aluminum, 3' long door saddles	3.00	lf	69	71	-		-	-	46.753 /lf	140
1430	Door hardware, hinges, full mortise, high frequency, brass base, US10, 4-1/2" x 4-1/2"	1.50	pr	-	179	-		-	-	119.18 /pr	179
1200	Paints & coatings, exterior, door & frame, one side, flush, 1 coat, 3' x 7'	1.00	ea	56	4	-		-	-	60.10 /ea	60
	08 11 00.030 Metal Doors & Frames (3070)			*1,507*	*3,514*					*5,021.610/EA*	*5,022*
	1.00 EA										
	10.371 Labor hours										
	08 11 00.030.25 Exterior Door, 3' x 7'			*1,507*	*3,514*	*0*		*0*	*0*	*5,021.610/EA*	*5,022*
	1.00 EA										
	10.371 Labor hours										
08 11 00.060.30	*Exterior Door, 6' x 7'*										
08 11 00.060	*Metal Doors & Frames (6070)*										
3620	Frames, steel, knock down, hollow metal, 14 gauge, up to 5-3/4" D, 7'-0" H, 6'-0" W, double	3.00	EA	552	1,389	-		-	-	647.007 /EA	1,941
5100	Doors, aluminum, commercial entrance, flush panel doors, pair of, 3'-0" x 7'-0", incl. hinges, push/pull, deadlock, cylinder, threshold, excl. glazing	3.00	pr	3,631	9,603	-		-	-	4,411.20 /pr	13,234
3000	Door hardware, panic device, narrow stile, mortise bar, exit only	6.00	ea	1,657	7,091	-		-	-	1,458.032 /ea	8,748
0011	Thresholds, aluminum, 3' long door saddles	18.00	lf	414	427	-		-	-	46.75 /lf	842
1430	Door hardware, hinges, full mortise, high frequency, brass base, US10, 4-1/2" x 4-1/2"	9.00	pr	-	1,073	-		-	-	119.169 /pr	1,073

Central Kitsap Treatment Plant Solids Handling

Kitsap County

Detail Report with Contractor Markups

Item		Description	Takeoff Qty		Labor Amount	Material Amount	Subcontract Amount	Subcontract Name	Equipment Amount	Other Amount	Total Unit Cost	Total Amount
08 11 00.060		*Metal Doors & Frames (6070)*										
	1200	Paints & coatings, exterior, door & frame, one side, flush, 1 coat, 3' x 7'	6.00	ea	334	27	-		-	-	60.145 /ea	361
		08 11 00.060 Metal Doors & Frames (6070)			*6,588*	*19,610*					*8,732.567/EA*	*26,198*
		3.00 EA										
		45.824 Labor hours										
		08 11 00.060.30 Exterior Door, 6' x 7'			*6,588*	*19,610*	*0*		*0*	*0*	*8,732.567/EA*	*26,198*
		3.00 EA										
		45.824 Labor hours										
08 36 15.000.10		*Overhead Door, 14' x 14'*										
08 36 15.000		*Overhead Door - Sectional Steel*										
	0500	Doors, rolling service, steel, manual, 20 gauge, 14' x 14' high, incl. hardware	1.00	EA	3,026	6,353	-		-	-	9,378.300 /EA	9,378
	3300	Doors, rolling service, steel, manual, for enamel finish, add	196.00	sf	-	849	-		-	-	4.334 /sf	849
	3700	Doors, rolling service, steel, manual, for safety edge bottom bar, electric, add	14.00	lf	-	1,241	-		-	-	88.641 /lf	1,241
	4000	Doors, rolling service, steel, manual, for weatherstripping, extruded rubber, jambs, add	42.00	lf	-	1,299	-		-	-	30.925 /lf	1,299
	4500	Doors, rolling service, steel, manual, motor operators for, to 14' x 14' opening	1.00	ea	484	2,364	-		-	-	2,847.87 /ea	2,848
	4700	Doors, rolling service, steel, manual, for fire door, additional fusible link, add	1.00	ea	-	61	-		-	-	61.07 /ea	61
		08 36 15.000 Overhead Door - Sectional Steel			*3,510*	*12,167*					*15,676.44 /EA*	*15,676*
		1.00 EA										
		23.20 Labor hours										
		08 36 15.000.10 Overhead Door, 14' x 14'			*3,510*	*12,167*	*0*		*0*	*0*	*15,676.44 /EA*	*15,676*
		1.00 EA										
		23.20 Labor hours										
		DIVISION 08 OPENINGS			**11,605**	**35,291**	**0**		**0**	**0**	**9,379.15 /EA**	**46,896**
		5.00 EA										
		79.394 Labor hours										
DIVISION 31		**EARTHWORK**										
31.23.10.P005		*Excavation, Backfill, and Haul Off-Site*										
31 23 10.000		*Excavation, Backfill, and Haul Off-Site*										

Central Kitsap Treatment Plant Solids Handling

Kitsap County

Detail Report with Contractor Markups

Item		Description	Takeoff Qty		Labor Amount	Material Amount	Subcontract Amount	Subcontract Name	Equipment Amount	Other Amount	Total Unit Cost	Total Amount
31 23 10.000		*Excavation, Backfill, and Haul Off-Site*										
n	6260	Strt excvt for minor strtr,bank measr,for sprd and mat ftngs,elvtr pits,and small bldng fndtn,sandy clay loam,2 cy bucket,machin excvtn,hydrlc backhoe	855.00	CY	7,949	-	-		6,689	-	17.121 /CY	14,638
	4010	Backfill, structural, sandy clay & loam, 200 H.P. dozer, 50' haul, from existing stockpile, excludes compaction	460.00	CY	289	-	-		505	-	1.726 /CY	794
	4060	Borrow, common earth, 1-1/2 C.Y. bucket, loading and/or spreading, front end loader, wheel-mounted	460.00	CY	726	6,697	-		357	-	16.912 /CY	7,780
n	0560	Hauling,excavated borrow material,loose cubic yards,20 mile round trip,0.4 load/hr,base wide rate,12 cy truck,highway haulers,excludes loading	500.00	CY	12,592	-	-		13,048	-	51.279 /CY	25,639
	0400	Compaction, structural, select fill, 8" lifts, sheepsfoot or wobbly wheel roller	460.00	CY	470	-	-		734	-	2.617 /CY	1,204
		31 23 10.000 Excavation, Backfill, and Haul Off-Site			*22,026*	*6,697*			*21,333*		*18.302/CY*	*50,055*
		2,735.00 CY										
		177.536 Labor hours										
		141.990 Equipment hours										
		31.23.10.P005 Excavation, Backfill, and Haul Off-Site			*22,026*	*6,697*	*0*		*21,333*	*0*	*18.302/CY*	*50,055*
		2,735.00 CY										
		177.536 Labor hours										
		141.990 Equipment hours										
		DIVISION 31 EARTHWORK			**22,026**	**6,697**	**0**		**21,333**	**0**	**18.302/CY**	**50,055**
		2,735.00 CY										
		177.536 Labor hours										
		141.990 Equipment hours										

DIVISION 46 WATER AND WASTEWATER EQUIPMENT

46.73.41.000 *Hot Water Boiler*

46 73 41.000		*Hot Water Boiler*										
	0110	Digester, Boilers, Natural Gas Fired	2.00	EA	43,532	825,497			15,070		442,049.41 /EA	884,099
	0110	Boiler control panel	1.00	ea	2,177	68,791			753		71,721.510 /ea	71,722
	0110	Allowance - Hot water pumps	1.00	LS	10,883	68,791			3,767		83,441.820 /LS	83,442
		46 73 41.000 Hot Water Boiler			*56,591*	*963,080*			*19,591*		*519,631.075/EA*	*1,039,262*
		2.00 EA										
		416.00 Labor hours										
		416.00 Equipment hours										

Central Kitsap Treatment Plant Solids Handling

Kitsap County

Detail Report with Contractor Markups

Item	Description	Takeoff Qty	Labor Amount	Material Amount	Subcontract Amount	Subcontract Name	Equipment Amount	Other Amount	Total Unit Cost	Total Amount
	46.73.41.000 Hot Water Boiler		*56,591*	*963,080*	*0*		*19,591*	*0*	*519,631.075/EA*	*1,039,262*
	2.00 EA									
	416.00 Labor hours									
	416.00 Equipment hours									
	DIVISION 46 WATER AND WASTEWATER EQUIPMENT		**56,591**	**963,080**	**0**		**19,591**	**0**	**519,631.075/EA**	**1,039,262**
	2.00 EA									
	416.00 Labor hours									
	416.00 Equipment hours									
	630 DIGESTER CONTROL BUILDING		***459,485***	***1,453,953***	***0***		***56,229***	***0***	***617.450/BSF***	***1,969,667***
	3,190.00 BSF									
	3,696.267 Labor hours									
	774.807 Equipment hours									

819 FOG RECEIVING BUILDING

DIVISION 03 CONCRETE

03 11 13.154.05 *Concrete Footing, 12" High x 2' Wide x 91 LF*

03 11 13.154		*Cont. Footing 60" x 18"*									
	3050	C.I.P. concrete forms, slab on grade, edge, wood, 7" to 12" high, 4 use, includes erecting, bracing, stripping and cleaning	186.00	sfca	1,612	390	-	-	-	10.767 /sfca	2,003
n	9015	C.I.P. concrete forms, bulkhead for slab on grade w/ keyway, up to 12", exp metal, includes erecting, bracing, stripping and cleaning	9.10	sfca	47	7	-	-	-	5.941 /sfca	54
n	2050	Reinforcing steel, unload and sort, add to base_SLAB ON GRADE	0.613	ton	46	-	-	20	-	108.06 /ton	66
	0600	Reinforcing steel, in place, slab on grade, #3 to #7, A615, grade 60, incl labor for accessories, excl material for accessories	0.613	ton	1,153	1,529	-	-	-	4,374.029 /ton	2,681
	2220	Reinforcing steel, crane cost for handling, 90 picks/day, up to 0.5 Ton/day	0.613	ton	132	-	-	57	-	308.695 /ton	189
	4650	Structural concrete, placing, slab on grade, pumped, over 6" thick, includes leveling (strike off) & consolidation, excludes material	0.70	cy	26	-	-	3	-	41.50 /cy	29
	4650	Structural concrete, placing, slab on grade, pumped, over 6" thick, includes leveling (strike off) & consolidation, excludes material	7.00	cy	261	-	-	29	-	41.501 /cy	291

Central Kitsap Treatment Plant Solids Handling

Kitsap County

Detail Report with Contractor Markups

	Item	Description	Takeoff Qty		Labor Amount	Material Amount	Subcontract Amount	Subcontract Name	Equipment Amount	Other Amount	Total Unit Cost	Total Amount
03 11 13.154		*Cont. Footing 60" x 18"*										
n	0725	Struct SLAB ON GRADE concrete,ready mix,normal wt,4500 psi,includes local aggregate,sand,portland cement and water,delivered, includes all additives	0.70	cy	-	277	-		-	-	395.54 /cy	277
n	0725	Struct SLAB ON GRADE concrete,ready mix,normal wt,4500 psi,includes local aggregate,sand,portland cement and water,delivered, includes all additives	7.00	CY	-	2,769	-		-	-	395.55 /CY	2,769
n	0255	Concrete finishing, floors, manual screed, bull float, machine float & steel trowel (walk-behind)_SOG	182.00	sf	283	-	-		15	-	1.641 /sf	299
n	0122	Control joint, concrete floor slab, sawcut in green concrete, 1" depth_SOG	9.10	lf	8	0	-		1	-	1.074 /lf	10
n	0215	Control joint, clean out control joint of debris_SOG	9.10	lf	1	-	-			-	0.154 /lf	1
n	0367	Control joint, joint sealant, polyurethane, 1/4" x 1/4" (308 LF/Gal)_SOG	18.20	lf	63	5	-		-	-	3.723 /lf	68
n	0310	Concrete surface treatment, curing, sprayed membrane compound_SOG	1.82	csf	31	23	-		-	-	29.835 /csf	54
	1200	Vapor retarders, building paper, polyethylene vapor barrier, standard, 10 mil (.010" thick)	1.82	sq	49	26	-		-	-	40.703 /sq	74
n	1310	Fill, gravel fill, compacted, under floor slabs, alternate pricing method, 12" deep_SOG	8.00	ecy	186	440	-		16	-	80.205 /ecy	642
n	1136	Hauling, excavated borrow material, loose cubic yards, 20 mile round trip, 0.4 loads/hour, 16.5 c.y. dump trailer, highway haulers, excludes loading	8.00	lcy	139	-	-		156	-	36.849 /lcy	295
		03 11 13.154 Cont. Footing 60" x 18"			*4,038*	*5,466*			*297*		*1,400.166/CY*	*9,801*
		7.00 CY										
		33.399 Labor hours										
		4.734 Equipment hours										
		03 11 13.154.05 Concrete Footing, 12" High x 2' Wide x 91 LF			*4,038*	*5,466*	*0*		*297*	*0*	*1,400.166/CY*	*9,801*
		7.00 CY										
		33.399 Labor hours										
		4.734 Equipment hours										
03 11 13.303.05		*Lower Level Concrete Slab, 12" Thick x 276 SF*										
03 11 13.504		*12" Slab on Grade*										
	3050	C.I.P. concrete forms, slab on grade, edge, wood, 7" to 12" high, 4 use, includes erecting, bracing, stripping and cleaning	66.452	sfca	576	139	-		-	-	10.767 /sfca	715
n	9015	C.I.P. concrete forms, bulkhead for slab on grade w/ keyway, up to 12", exp metal, includes erecting, bracing, stripping and cleaning	13.80	sfca	71	11	-		-	-	5.937 /sfca	82
n	2050	Reinforcing steel, unload and sort, add to base_SLAB ON GRADE	0.963	ton	73	-	-		32	-	108.048 /ton	104

Central Kitsap Treatment Plant Solids Handling

Kitsap County

Detail Report with Contractor Markups

	Item	Description	Takeoff Qty		Labor Amount	Material Amount	Subcontract Amount	Subcontract Name	Equipment Amount	Other Amount	Total Unit Cost	Total Amount
03 11 13.504		*12" Slab on Grade*										
	0600	Reinforcing steel, in place, slab on grade, #3 to #7, A615, grade 60, incl labor for accessories, excl material for accessories	0.963	ton	1,811	2,401	-		-	-	4,374.060 /ton	4,212
	2220	Reinforcing steel, crane cost for handling, 90 picks/day, up to 0.5 Ton/day	0.963	ton	207	-	-		90	-	308.69 /ton	297
	4650	Structural concrete, placing, slab on grade, pumped, over 6" thick, includes leveling (strike off) & consolidation, excludes material	1.10	cy	41	-	-		5	-	41.51 /cy	46
	4650	Structural concrete, placing, slab on grade, pumped, over 6" thick, includes leveling (strike off) & consolidation, excludes material	11.00	cy	410	-	-		46	-	41.502 /cy	457
n	0725	Struct SLAB ON GRADE concrete,ready mix,normal wt,4500 psi,includes local aggregate,sand,portland cement and water,delivered, includes all additives	1.10	cy	-	435	-		-	-	395.545 /cy	435
n	0725	Struct SLAB ON GRADE concrete,ready mix,normal wt,4500 psi,includes local aggregate,sand,portland cement and water,delivered, includes all additives	11.00	CY	-	4,351	-		-	-	395.552 /CY	4,351
n	0255	Concrete finishing, floors, manual screed, bull float, machine float & steel trowel (walk-behind)_SOG	275.992	sf	430	-	-		23	-	1.641 /sf	453
n	0122	Control joint, concrete floor slab, sawcut in green concrete, 1" depth_SOG	13.80	lf	13	1	-		1	-	1.074 /lf	15
n	0215	Control joint, clean out control joint of debris_SOG	13.80	lf	2	-	-			-	0.155 /lf	2
n	0367	Control joint, joint sealant, polyurethane, 1/4" x 1/4" (308 LF/Gal)_SOG	27.599	lf	95	8	-		-	-	3.724 /lf	103
n	0310	Concrete surface treatment, curing, sprayed membrane compound_SOG	2.76	csf	47	35	-		-	-	29.826 /csf	82
	1200	Vapor retarders, building paper, polyethylene vapor barrier, standard, 10 mil (.010" thick)	2.76	sq	74	39	-		-	-	40.699 /sq	112
n	1310	Fill, gravel fill, compacted, under floor slabs, alternate pricing method, 12" deep_SOG	12.00	ecy	279	660	-		23	-	80.206 /ecy	962
n	1136	Hauling, excavated borrow material, loose cubic yards, 20 mile round trip, 0.4 loads/hour, 16.5 c.y. dump trailer, highway haulers, excludes loading	12.00	lcy	208	-	-		234	-	36.848 /lcy	442
		03 11 13.504 12" Slab on Grade			*4,337*	*8,080*			*454*		*1,170.111/CY*	*12,871*
		11.00 CY										
		35.423 Labor hours										
		7.200 Equipment hours										
		03 11 13.303.05 Lower Level Concrete Slab, 12" Thick x 276 SF			*4,337*	*8,080*	*0*		*454*	*0*	*1,170.111/CY*	*12,871*
		11.00 CY										
		35.423 Labor hours										
		7.200 Equipment hours										

AACE Classification Accuracy Range

Upper Range +50% **Lower Range -30%**

Central Kitsap Treatment Plant Solids Handling

Kitsap County

Detail Report with Contractor Markups

	Item	Description	Takeoff Qty		Labor Amount	Material Amount	Subcontract Amount	Subcontract Name	Equipment Amount	Other Amount	Total Unit Cost	Total Amount
03 11 13.303.10		*Elevated Roof Slab, 12" Thick x 1,258 SF*										
03 11 13.303		*12" Elevated Slab*										
	3050	C.I.P. concrete forms, slab on grade, edge, wood, 7" to 12" high, 4 use, includes erecting, bracing, stripping and cleaning	141.872	sfca	1,230	298	-		-	-	10.767 /sfca	1,528
n	9015	C.I.P. concrete forms, bulkhead for slab on grade w/ keyway, up to 12", exp metal, includes erecting, bracing, stripping and cleaning	62.899	sfca	325	49	-		-	-	5.938 /sfca	373
n	2050	Reinforcing steel, unload and sort, add to base_SLAB ON GRADE	4.113	ton	310	-	-		135	-	108.050 /ton	444
	0600	Reinforcing steel, in place, slab on grade, #3 to #7, A615, grade 60, incl labor for accessories, excl material for accessories	4.113	ton	7,734	10,257	-		-	-	4,374.036 /ton	17,990
	2220	Reinforcing steel, crane cost for handling, 90 picks/day, up to 0.5 Ton/day	4.113	ton	885	-	-		385	-	308.711 /ton	1,270
	4650	Structural concrete, placing, slab on grade, pumped, over 6" thick, includes leveling (strike off) & consolidation, excludes material	4.70	cy	175	-	-		20	-	41.502 /cy	195
	4650	Structural concrete, placing, slab on grade, pumped, over 6" thick, includes leveling (strike off) & consolidation, excludes material	47.00	cy	1,754	-	-		197	-	41.502 /cy	1,951
n	0725	Struct SLAB ON GRADE concrete,ready mix,normal wt,4500 psi,includes local aggregate,sand,portland cement and water,delivered, includes all additives	47.00	CY	-	18,591	-		-	-	395.551 /CY	18,591
n	0725	Struct SLAB ON GRADE concrete,ready mix,normal wt,4500 psi,includes local aggregate,sand,portland cement and water,delivered, includes all additives	4.70	cy	-	1,859	-		-	-	395.549 /cy	1,859
n	0255	Concrete finishing, floors, manual screed, bull float, machine float & steel trowel (walk-behind)_SOG	1,257.979	sf	1,958	-	-		106	-	1.641 /sf	2,064
n	0122	Control joint, concrete floor slab, sawcut in green concrete, 1" depth_SOG	62.899	lf	59	3	-		6	-	1.076 /lf	68
n	0215	Control joint, clean out control joint of debris_SOG	62.899	lf	10	-	-			-	0.155 /lf	10
n	0367	Control joint, joint sealant, polyurethane, 1/4" x 1/4" (308 LF/Gal)_SOG	125.798	lf	434	35	-		-	-	3.722 /lf	468
n	0310	Concrete surface treatment, curing, sprayed membrane compound_SOG	12.58	csf	214	161	-		-	-	29.835 /csf	375
	1200	Vapor retarders, building paper, polyethylene vapor barrier, standard, 10 mil (.010" thick)	12.58	sq	336	176	-		-	-	40.704 /sq	512
n	1310	Fill, gravel fill, compacted, under floor slabs, alternate pricing method, 12" deep_SOG	54.00	ecy	1,254	2,972	-		105	-	80.204 /ecy	4,331
n	1136	Hauling, excavated borrow material, loose cubic yards, 20 mile round trip, 0.4 loads/hour, 16.5 c.y. dump trailer, highway haulers, excludes loading	54.00	lcy	938	-	-		1,052	-	36.849 /lcy	1,990

Central Kitsap Treatment Plant Solids Handling

Kitsap County

Detail Report with Contractor Markups

Item		Description	Takeoff Qty		Labor Amount	Material Amount	Subcontract Amount	Subcontract Name	Equipment Amount	Other Amount	Total Unit Cost	Total Amount
		03 11 13.303 12" Elevated Slab			*17,614*	*34,400*			*2,005*		*1,149.350/CY*	*54,019*
		47.00 CY										
		143.721 Labor hours										
		32.054 Equipment hours										
		03 11 13.303.10 Elevated Roof Slab, 12" Thick x 1,258 SF			*17,614*	*34,400*	*0*		*2,005*	*0*	*1,149.350/CY*	*54,019*
		47.00 CY										
		143.721 Labor hours										
		32.054 Equipment hours										
03 11 13.306.05		*Lower Level Concrete Slab, 18" Thick x 131 SF*										
03 11 13.506		*18" Slab on Grade*										
	3050	C.I.P. concrete forms, slab on grade, edge, wood, 7" to 12" high, 4 use, includes erecting, bracing, stripping and cleaning	68.70	sfca	596	144	-		-	-	10.767 /sfca	740
n	9015	C.I.P. concrete forms, bulkhead for slab on grade w/ keyway, up to 12", exp metal, includes erecting, bracing, stripping and cleaning	9.833	sfca	51	8	-		-	-	5.938 /sfca	58
n	2050	Reinforcing steel, unload and sort, add to base_SLAB ON GRADE	0.70	ton	53	-	-		23	-	108.04 /ton	76
	0600	Reinforcing steel, in place, slab on grade, #3 to #7, A615, grade 60, incl labor for accessories, excl material for accessories	0.70	ton	1,316	1,746	-		-	-	4,374.014 /ton	3,062
	2220	Reinforcing steel, crane cost for handling, 90 picks/day, up to 0.5 Ton/day	0.70	ton	151	-	-		66	-	308.714 /ton	216
	4650	Structural concrete, placing, slab on grade, pumped, over 6" thick, includes leveling (strike off) & consolidation, excludes material	0.80	cy	30	-	-		3	-	41.50 /cy	33
	4650	Structural concrete, placing, slab on grade, pumped, over 6" thick, includes leveling (strike off) & consolidation, excludes material	8.00	cy	298	-	-		34	-	41.501 /cy	332
n	0725	Struct SLAB ON GRADE concrete,ready mix,normal wt,4500 psi,includes local aggregate,sand,portland cement and water,delivered, includes all additives	0.80	cy	-	316	-		-	-	395.563 /cy	316
n	0725	Struct SLAB ON GRADE concrete,ready mix,normal wt,4500 psi,includes local aggregate,sand,portland cement and water,delivered, includes all additives	8.00	CY	-	3,164	-		-	-	395.55 /CY	3,164
n	0255	Concrete finishing, floors, manual screed, bull float, machine float & steel trowel (walk-behind)_SOG	131.103	sf	204	-	-		11	-	1.641 /sf	215
n	0122	Control joint, concrete floor slab, sawcut in green concrete, 1" depth_SOG	6.555	lf	6	0	-		1	-	1.074 /lf	7
n	0215	Control joint, clean out control joint of debris_SOG	6.555	lf	1	-	-			-	0.159 /lf	1
n	0367	Control joint, joint sealant, polyurethane, 1/4" x 1/4" (308 LF/Gal)_SOG	13.11	lf	45	4	-		-	-	3.72 /lf	49

Central Kitsap Treatment Plant Solids Handling

Kitsap County

Detail Report with Contractor Markups

	Item	Description	Takeoff Qty		Labor Amount	Material Amount	Subcontract Amount	Subcontract Name	Equipment Amount	Other Amount	Total Unit Cost	Total Amount
03 11 13.506		*18" Slab on Grade*										
n	0310	Concrete surface treatment, curing, sprayed membrane compound_SOG	1.311	csf	22	17	-		-	-	29.840 /csf	39
	1200	Vapor retarders, building paper, polyethylene vapor barrier, standard, 10 mil (.010" thick)	1.311	sq	35	18	-		-	-	40.694 /sq	53
n	1310	Fill, gravel fill, compacted, under floor slabs, alternate pricing method, 12" deep_SOG	6.00	ecy	139	330	-		12	-	80.207 /ecy	481
n	1136	Hauling, excavated borrow material, loose cubic yards, 20 mile round trip, 0.4 loads/hour, 16.5 c.y. dump trailer, highway haulers, excludes loading	6.00	lcy	104	-	-		117	-	36.845 /lcy	221
		03 11 13.506 18" Slab on Grade			*3,051*	*5,747*			*266*		*1,133.055/CY*	*9,064*
		8.00 CY										
		24.766 Labor hours										
		3.991 Equipment hours										
		03 11 13.306.05 Lower Level Concrete Slab, 18" Thick x 131 SF			*3,051*	*5,747*	*0*		*266*	*0*	*1,133.055/CY*	*9,064*
		8.00 CY										
		24.766 Labor hours										
		3.991 Equipment hours										
03 11 13.504.60		*1st Level Concrete Slab, 12" Thick x 1,258 SF*										
03 11 13.504		*12" Slab on Grade*										
	3050	C.I.P. concrete forms, slab on grade, edge, wood, 7" to 12" high, 4 use, includes erecting, bracing, stripping and cleaning	141.872	sfca	1,230	298	-		-	-	10.767 /sfca	1,528
n	9015	C.I.P. concrete forms, bulkhead for slab on grade w/ keyway, up to 12", exp metal, includes erecting, bracing, stripping and cleaning	62.899	sfca	325	49	-		-	-	5.938 /sfca	373
n	2050	Reinforcing steel, unload and sort, add to base_SLAB ON GRADE	4.113	ton	310	-	-		135	-	108.057 /ton	444
	0600	Reinforcing steel, in place, slab on grade, #3 to #7, A615, grade 60, incl labor for accessories, excl material for accessories	4.113	ton	7,734	10,257	-		-	-	4,374.034 /ton	17,990
	2220	Reinforcing steel, crane cost for handling, 90 picks/day, up to 0.5 Ton/day	4.113	ton	885	-	-		385	-	308.716 /ton	1,270
	4650	Structural concrete, placing, slab on grade, pumped, over 6" thick, includes leveling (strike off) & consolidation, excludes material	47.00	cy	1,754	-	-		197	-	41.501 /cy	1,951
	4650	Structural concrete, placing, slab on grade, pumped, over 6" thick, includes leveling (strike off) & consolidation, excludes material	4.70	cy	175	-	-		20	-	41.504 /cy	195
n	0725	Struct SLAB ON GRADE concrete,ready mix,normal wt,4500 psi,includes local aggregate,sand,portland cement and water,delivered, includes all additives	47.00	CY	-	13,107	-		-	-	278.864 /CY	13,107

Central Kitsap Treatment Plant Solids Handling

Kitsap County

Detail Report with Contractor Markups

	Item	Description	Takeoff Qty		Labor Amount	Material Amount	Subcontract Amount	Subcontract Name	Equipment Amount	Other Amount	Total Unit Cost	Total Amount
03 11 13.504		*12" Slab on Grade*										
n	0725	Struct SLAB ON GRADE concrete,ready mix,normal wt,4500 psi,includes local aggregate,sand,portland cement and water,delivered, includes all additives	4.70	cy	-	1,311	-		-	-	278.862 /cy	1,311
n	0255	Concrete finishing, floors, manual screed, bull float, machine float & steel trowel (walk-behind)_SOG	1,257.979	sf	1,958	-	-		106	-	1.641 /sf	2,064
n	0122	Control joint, concrete floor slab, sawcut in green concrete, 1" depth_SOG	62.899	lf	59	3	-		6	-	1.076 /lf	68
n	0215	Control joint, clean out control joint of debris_SOG	62.899	lf	10	-	-			-	0.155 /lf	10
n	0367	Control joint, joint sealant, polyurethane, 1/4" x 1/4" (308 LF/Gal)_SOG	125.798	lf	434	35	-		-	-	3.722 /lf	468
n	0310	Concrete surface treatment, curing, sprayed membrane compound_SOG	12.58	csf	214	161	-		-	-	29.835 /csf	375
	1200	Vapor retarders, building paper, polyethylene vapor barrier, standard, 10 mil (.010" thick)	12.58	sq	336	176	-		-	-	40.704 /sq	512
n	1310	Fill, gravel fill, compacted, under floor slabs, alternate pricing method, 12" deep_SOG	54.00	ecy	1,254	2,972	-		105	-	80.204 /ecy	4,331
n	1136	Hauling, excavated borrow material, loose cubic yards, 20 mile round trip, 0.4 loads/hour, 16.5 c.y. dump trailer, highway haulers, excludes loading	54.00	lcy	938	-	-		1,052	-	36.849 /lcy	1,990
		03 11 13.504 12" Slab on Grade			*17,614*	*28,367*			*2,005*		*1,020.993/CY*	*47,987*
		47.00 CY										
		143.721 Labor hours										
		32.054 Equipment hours										
		03 11 13.504.60 1st Level Concrete Slab, 12" Thick x 1,258 SF			*17,614*	*28,367*	*0*		*2,005*	*0*	*1,020.993/CY*	*47,987*
		47.00 CY										
		143.721 Labor hours										
		32.054 Equipment hours										
03 11 13.804.05		*Concrete Wall, 20' High x 150 LF*										
03 11 13.804		*12" CIP Wall*										
	0500	C.I.P. concrete forms, wall, wood bulkhead with 2 piece keyway, 1 use, includes erecting, bracing, stripping and cleaning	150.00	lf	3,288	877	-		-	-	27.767 /lf	4,165
	2550	C.I.P. concrete forms, wall, job built, plywood, over 8' to 16' high, 4 use, includes erecting, bracing, stripping and cleaning	6,000.00	sfca	88,235	10,216	-		-	-	16.408 /sfca	98,450
	5200	Chamfer strip, wood, 3/4" wide	300.00	lf	564	72	-		-	-	2.122 /lf	636
	1400	Tie cones, plastic, for coil tie system, for CIP wall forms, 1/2" bolt diameter x 1" setback length, includes material only	5.00	c	-	559	-		-	-	111.786 /c	559
n	3010	Waterstop, rubber, center bulb, 1/4" thick x 6" wide_WALLS	300.00	lf	2,043	3,870	-		-	-	19.708 /lf	5,912

Central Kitsap Treatment Plant Solids Handling

Kitsap County

Detail Report with Contractor Markups

	Item	Description	Takeoff Qty		Labor Amount	Material Amount	Subcontract Amount	Subcontract Name	Equipment Amount	Other Amount	Total Unit Cost	Total Amount
03 11 13.804		*12" CIP Wall*										
	0100	Splice rebar, standard, self-aligning type, taper threaded, #4 bars, includes holding rebar in place while splicing	123.20	ea	2,246	2,712	-		-	-	40.247 /ea	4,958
n	2020	Reinforcing steel, unload and sort, add to base_WALLS	11.20	ton	843	-	-		367	-	108.049 /ton	1,210
n	2214	Reinforcing steel, crane cost for handling, average, add_WALLS	11.20	ton	917	-	-		399	-	117.45 /ton	1,315
	0700	Reinforcing steel, in place, walls, #3 to #7, A615, grade 60, incl labor for accessories, excl material for accessories	11.20	ton	16,146	27,929	-		-	-	3,935.288 /ton	44,075
	5100	Structural concrete, placing, walls, pumped, 12" thick, includes leveling (strike off) & consolidation, excludes material	11.20	cy	703	-	-		79	-	69.797 /cy	782
	5100	Structural concrete, placing, walls, pumped, 12" thick, includes leveling (strike off) & consolidation, excludes material	112.00	cy	7,028	-	-		789	-	69.798 /cy	7,817
n	0525	Struct WALLS concrete,ready mix,normal wt,4500 psi,includes local aggregate,sand,portland cement and water,delivered, includes all additives	11.20	cy	-	4,430	-		-	-	395.552 /cy	4,430
n	0525	Struct WALLS concrete,ready mix,normal wt,4500 psi,includes local aggregate,sand,portland cement and water,delivered, includes all additives	112.00	CY	-	44,302	-		-	-	395.551 /CY	44,302
n	0210	Control joint, clean out control joint of debris_WALLS	150.00	lf	23	-	-			-	0.155 /lf	23
n	0366	Control joint, joint sealant, polyurethane, 1/4" x 1/4" (308 LF/Gal)_WALLS	150.00	lf	517	41	-		-	-	3.722 /lf	558
	0020	Concrete finishing, walls, includes breaking ties and patching voids	6,000.00	sf	10,341	413	-		-	-	1.792 /sf	10,754
	0050	Concrete finishing, walls, burlap rub with grout, includes breaking ties and patching voids	3,000.00	sf	6,205	206	-		-	-	2.137 /sf	6,411
		03 11 13.804 12" CIP Wall			*139,100*	*95,627*			*1,633*		*2,110.358/CY*	*236,360*
		112.00 CY										
		1,149.258 Labor hours										
		28.750 Equipment hours										
		03 11 13.804.05 Concrete Wall, 20' High x 150 LF			*139,100*	*95,627*	*0*		*1,633*	*0*	*2,110.358/CY*	*236,360*
		112.00 CY										
		1,149.258 Labor hours										
		28.750 Equipment hours										
03 11 13.804.10		*Concrete Wall, 8' High x 56 LF*										
03 11 13.804		*12" CIP Wall*										
	0500	C.I.P. concrete forms, wall, wood bulkhead with 2 piece keyway, 1 use, includes erecting, bracing, stripping and cleaning	23.00	lf	504	134	-		-	-	27.767 /lf	639

AACE Classification Accuracy Range

Upper Range +50% **Lower Range -30%**

Central Kitsap Treatment Plant Solids Handling

Kitsap County

Detail Report with Contractor Markups

	Item	Description	Takeoff Qty		Labor Amount	Material Amount	Subcontract Amount	Subcontract Name	Equipment Amount	Other Amount	Total Unit Cost	Total Amount
03 11 13.804		*12" CIP Wall*										
	2550	C.I.P. concrete forms, wall, job built, plywood, over 8' to 16' high, 4 use, includes erecting, bracing, stripping and cleaning	896.00	sfca	13,176	1,526	-		-	-	16.408 /sfca	14,702
	5200	Chamfer strip, wood, 3/4" wide	45.00	lf	85	11	-		-	-	2.121 /lf	95
	1400	Tie cones, plastic, for coil tie system, for CIP wall forms, 1/2" bolt diameter x 1" setback length, includes material only	1.00	c	-	112	-		-	-	111.80 /c	112
n	3010	Waterstop, rubber, center bulb, 1/4" thick x 6" wide_WALLS	79.00	lf	538	1,019	-		-	-	19.708 /lf	1,557
	0100	Splice rebar, standard, self-aligning type, taper threaded, #4 bars, includes holding rebar in place while splicing	18.70	ea	341	412	-		-	-	40.246 /ea	753
n	2020	Reinforcing steel, unload and sort, add to base_WALLS	1.70	ton	128	-	-		56	-	108.06 /ton	184
n	2214	Reinforcing steel, crane cost for handling, average, add_WALLS	1.70	ton	139	-	-		61	-	117.459 /ton	200
	0700	Reinforcing steel, in place, walls, #3 to #7, A615, grade 60, incl labor for accessories, excl material for accessories	1.70	ton	2,451	4,239	-		-	-	3,935.282 /ton	6,690
	5100	Structural concrete, placing, walls, pumped, 12" thick, includes leveling (strike off) & consolidation, excludes material	1.70	cy	107	-	-		12	-	69.78 /cy	119
	5100	Structural concrete, placing, walls, pumped, 12" thick, includes leveling (strike off) & consolidation, excludes material	17.00	cy	1,067	-	-		120	-	69.80 /cy	1,187
n	0525	Struct WALLS concrete,ready mix,normal wt,4500 psi,includes local aggregate,sand,portland cement and water,delivered, includes all additives	1.70	cy	-	672	-		-	-	395.55 /cy	672
n	0525	Struct WALLS concrete,ready mix,normal wt,4500 psi,includes local aggregate,sand,portland cement and water,delivered, includes all additives	17.00	CY	-	6,724	-		-	-	395.551 /CY	6,724
n	0210	Control joint, clean out control joint of debris_WALLS	23.00	lf	4	-	-			-	0.155 /lf	4
n	0366	Control joint, joint sealant, polyurethane, 1/4" x 1/4" (308 LF/Gal)_WALLS	23.00	lf	79	6	-		-	-	3.721 /lf	86
	0020	Concrete finishing, walls, includes breaking ties and patching voids	896.00	sf	1,544	62	-		-	-	1.792 /sf	1,606
	0050	Concrete finishing, walls, burlap rub with grout, includes breaking ties and patching voids	448.00	sf	927	31	-		-	-	2.137 /sf	957
		03 11 13.804 12" CIP Wall			*21,089*	*14,948*			*248*		*2,134.423/CY*	*36,285*
		17.00 CY										
		174.191 Labor hours										
		4.364 Equipment hours										
		03 11 13.804.10 Concrete Wall, 8' High x 56 LF			*21,089*	*14,948*	*0*		*248*	*0*	*2,134.423/CY*	*36,285*
		17.00 CY										
		174.191 Labor hours										
		4.364 Equipment hours										

AACE Classification Accuracy Range

Upper Range +50% **Lower Range -30%**

Central Kitsap Treatment Plant Solids Handling

Kitsap County

Detail Report with Contractor Markups

	Item	Description	Takeoff Qty		Labor Amount	Material Amount	Subcontract Amount	Subcontract Name	Equipment Amount	Other Amount	Total Unit Cost	Total Amount
03 11 13.804.15		*Concrete Wall, 25' High x 34 LF*										
03 11 13.804		*12" CIP Wall*										
	0500	C.I.P. concrete forms, wall, wood bulkhead with 2 piece keyway, 1 use, includes erecting, bracing, stripping and cleaning	43.00	lf	943	251	-		-	-	27.767 /lf	1,194
	2550	C.I.P. concrete forms, wall, job built, plywood, over 8' to 16' high, 4 use, includes erecting, bracing, stripping and cleaning	1,700.00	sfca	25,000	2,894	-		-	-	16.408 /sfca	27,894
	5200	Chamfer strip, wood, 3/4" wide	85.00	lf	160	20	-		-	-	2.122 /lf	180
	1400	Tie cones, plastic, for coil tie system, for CIP wall forms, 1/2" bolt diameter x 1" setback length, includes material only	2.00	c	-	224	-		-	-	111.785 /c	224
n	3010	Waterstop, rubber, center bulb, 1/4" thick x 6" wide_WALLS	77.00	lf	524	993	-		-	-	19.708 /lf	1,518
	0100	Splice rebar, standard, self-aligning type, taper threaded, #4 bars, includes holding rebar in place while splicing	35.20	ea	642	775	-		-	-	40.247 /ea	1,417
n	2020	Reinforcing steel, unload and sort, add to base_WALLS	3.20	ton	241	-	-		105	-	108.05 /ton	346
n	2214	Reinforcing steel, crane cost for handling, average, add_WALLS	3.20	ton	262	-	-		114	-	117.447 /ton	376
	0700	Reinforcing steel, in place, walls, #3 to #7, A615, grade 60, incl labor for accessories, excl material for accessories	3.20	ton	4,613	7,980	-		-	-	3,935.288 /ton	12,593
	5100	Structural concrete, placing, walls, pumped, 12" thick, includes leveling (strike off) & consolidation, excludes material	3.20	cy	201	-	-		23	-	69.80 /cy	223
	5100	Structural concrete, placing, walls, pumped, 12" thick, includes leveling (strike off) & consolidation, excludes material	32.00	cy	2,008	-	-		225	-	69.798 /cy	2,234
n	0525	Struct WALLS concrete,ready mix,normal wt,4500 psi,includes local aggregate,sand,portland cement and water,delivered, includes all additives	3.20	cy	-	1,266	-		-	-	395.553 /cy	1,266
n	0525	Struct WALLS concrete,ready mix,normal wt,4500 psi,includes local aggregate,sand,portland cement and water,delivered, includes all additives	32.00	CY	-	12,658	-		-	-	395.551 /CY	12,658
n	0210	Control joint, clean out control joint of debris_WALLS	43.00	lf	7	-	-			-	0.155 /lf	7
n	0366	Control joint, joint sealant, polyurethane, 1/4" x 1/4" (308 LF/Gal)_WALLS	43.00	lf	148	12	-		-	-	3.722 /lf	160
	0020	Concrete finishing, walls, includes breaking ties and patching voids	1,700.00	sf	2,930	117	-		-	-	1.792 /sf	3,047
	0050	Concrete finishing, walls, burlap rub with grout, includes breaking ties and patching voids	850.00	sf	1,758	58	-		-	-	2.137 /sf	1,816
		03 11 13.804 12" CIP Wall			*39,436*	*27,248*			*467*		*2,098.478/CY*	*67,151*

32.00 CY

325.823 Labor hours
8.214 Equipment hours

AACE Classification Accuracy Range

Upper Range +50% **Lower Range -30%**

Central Kitsap Treatment Plant Solids Handling

Kitsap County

Detail Report with Contractor Markups

Item		Description	Takeoff Qty		Labor Amount	Material Amount	Subcontract Amount	Subcontract Name	Equipment Amount	Other Amount	Total Unit Cost	Total Amount
		03 11 13.804.15 Concrete Wall, 25' High x 34 LF			*39,436*	*27,248*	*0*		*467*	*0*	*2,098.478/CY*	*67,151*
		32.00 CY										
		325.823 Labor hours										
		8.214 Equipment hours										
03 11 13.815.05		*Grade Wall, 2' High x 92 LF*										
03 11 13.815		*24" CIP Wall*										
	0500	C.I.P. concrete forms, wall, wood bulkhead with 2 piece keyway, 1 use, includes erecting, bracing, stripping and cleaning	10.00	lf	219	58	-		-	-	27.766 /lf	278
	2550	C.I.P. concrete forms, wall, job built, plywood, over 8' to 16' high, 4 use, includes erecting, bracing, stripping and cleaning	368.00	sfca	5,412	627	-		-	-	16.408 /sfca	6,038
	5200	Chamfer strip, wood, 3/4" wide	19.00	lf	36	5	-		-	-	2.122 /lf	40
	1400	Tie cones, plastic, for coil tie system, for CIP wall forms, 1/2" bolt diameter x 1" setback length, includes material only	1.00	c	-	112	-		-	-	111.80 /c	112
n	3010	Waterstop, rubber, center bulb, 1/4" thick x 6" wide_WALLS	102.00	lf	695	1,316	-		-	-	19.708 /lf	2,010
	0100	Splice rebar, standard, self-aligning type, taper threaded, #4 bars, includes holding rebar in place while splicing	7.70	ea	140	170	-		-	-	40.248 /ea	310
n	2020	Reinforcing steel, unload and sort, add to base_WALLS	0.70	ton	53	-	-		23	-	108.014 /ton	76
n	2214	Reinforcing steel, crane cost for handling, average, add_WALLS	0.70	ton	57	-	-		25	-	117.47 /ton	82
	0700	Reinforcing steel, in place, walls, #3 to #7, A615, grade 60, incl labor for accessories, excl material for accessories	0.70	ton	1,009	1,746	-		-	-	3,935.257 /ton	2,755
	5100	Structural concrete, placing, walls, pumped, 12" thick, includes leveling (strike off) & consolidation, excludes material	0.70	cy	44	-	-		5	-	69.786 /cy	49
	5100	Structural concrete, placing, walls, pumped, 12" thick, includes leveling (strike off) & consolidation, excludes material	7.00	cy	439	-	-		49	-	69.801 /cy	489
n	0525	Struct WALLS concrete,ready mix,normal wt,4500 psi,includes local aggregate,sand,portland cement and water,delivered, includes all additives	0.70	cy	-	277	-		-	-	395.53 /cy	277
n	0525	Struct WALLS concrete,ready mix,normal wt,4500 psi,includes local aggregate,sand,portland cement and water,delivered, includes all additives	7.00	CY	-	2,769	-		-	-	395.551 /CY	2,769
n	0210	Control joint, clean out control joint of debris_WALLS	10.00	lf	2	-	-			-	0.155 /lf	2
n	0366	Control joint, joint sealant, polyurethane, 1/4" x 1/4" (308 LF/Gal)_WALLS	10.00	lf	34	3	-		-	-	3.723 /lf	37
	0020	Concrete finishing, walls, includes breaking ties and patching voids	368.00	sf	634	25	-		-	-	1.792 /sf	660

Central Kitsap Treatment Plant Solids Handling

Kitsap County

Detail Report with Contractor Markups

Item		Description	Takeoff Qty		Labor Amount	Material Amount	Subcontract Amount	Subcontract Name	Equipment Amount	Other Amount	Total Unit Cost	Total Amount
03 11 13.815		*24" CIP Wall*										
	0050	Concrete finishing, walls, burlap rub with grout, includes breaking ties and patching voids	184.00	sf	381	13	-		-	-	2.137 /sf	393
		03 11 13.815 24" CIP Wall			*9,155*	*7,119*			*102*		*2,339.35 /CY*	*16,375*
		7.00 CY										
		75.541 Labor hours										
		1.797 Equipment hours										
		03 11 13.815.05 Grade Wall, 2' High x 92 LF			*9,155*	*7,119*	*0*		*102*	*0*	*2,339.35 /CY*	*16,375*
		7.00 CY										
		75.541 Labor hours										
		1.797 Equipment hours										
03 41 33.000.20		*Double Tee Roof x 1,258 SF*										
03 41 33.000		*Precast and Prestressed Concrete*										
	0300	Precast tees, double, floor, 30' span, prestressed	1,257.979	SF	2,539	30,829	-		993	-	27.315 /SF	34,361
		03 41 33.000 Precast and Prestressed Concrete			*2,539*	*30,829*			*993*		*27.315/SF*	*34,361*
		1,257.979 SF										
		18.870 Labor hours										
		2.097 Equipment hours										
		03 41 33.000.20 Double Tee Roof x 1,258 SF			*2,539*	*30,829*	*0*		*993*	*0*	*27.315/SF*	*34,361*
		1,257.979 SF										
		18.870 Labor hours										
		2.097 Equipment hours										
		DIVISION 03 CONCRETE			**257,973**	**257,833**	**0**		**8,470**	**0**	**1,820.404/CY**	**524,276**
		288.00 CY										
		2,124.713 Labor hours										
		125.254 Equipment hours										
DIVISION 05		**METALS**										
05 50 00.315.10		*Stairs*										
05 50 00.315		*Metal Stairs - Aluminum*										
	0050	Stair, shop fabricated, steel, 4'-0" W, incl pipe railing, stringers, grating treads w/ safety nosing, per riser	3.00	RISR	491	3,043	-		28	-	1,187.493 /RISR	3,562
	0132	Floor grating, aluminum, 1-1/2" x 3/16" bearing bars @ 1-3/16" O.C., cross bars @ 4" O.C., up to 300 S.F., field fabricated from panels	24.00	sf	168	2,175	-		10	-	98.028 /sf	2,353

Central Kitsap Treatment Plant Solids Handling

Kitsap County

Detail Report with Contractor Markups

Item	Description	Takeoff Qty		Labor Amount	Material Amount	Subcontract Amount	Subcontract Name	Equipment Amount	Other Amount	Total Unit Cost	Total Amount
	05 50 00.315 Metal Stairs - Aluminum			*659*	*5,218*			*38*		*1,971.713/RISR*	*5,915*
	3.00 RISR										
	4.297 Labor hours										
	1.074 Equipment hours										
	05 50 00.315.10 Stairs			*659*	*5,218*	*0*		*38*	*0*	*1,971.713/RISR*	*5,915*
	3.00 RISR										
	4.297 Labor hours										
	1.074 Equipment hours										
05 52 02.002.10	*Hand Railing, 40 LF*										
05 52 02.002	*Aluminum Railings - 3 Rail*										
0210	Railing, pipe, aluminum, clear finish, 3 rails, 3'-6" high, posts @ 5' O.C., 1-1/2" dia, shop fabricated	40.00	LF	1,433	7,328	-		83	-	221.084 /LF	8,843
	05 52 02.002 Aluminum Railings - 3 Rail			*1,433*	*7,328*			*83*		*221.084/LF*	*8,843*
	40.00 LF										
	9.343 Labor hours										
	2.336 Equipment hours										
	05 52 02.002.10 Hand Railing, 40 LF			*1,433*	*7,328*	*0*		*83*	*0*	*221.084/LF*	*8,843*
	40.00 LF										
	9.343 Labor hours										
	2.336 Equipment hours										
	DIVISION 05 METALS			**2,092**	**12,546**	**0**		**121**	**0**	**14,758.50 /LS**	**14,759**
	1.00 LS										
	13.640 Labor hours										
	3.410 Equipment hours										
DIVISION 07	**THERMAL, MOISTURE PROTECTION**										
07 51 00.000.20	*Built Up Roofing System PVC x 1,258 SF*										
07 51 00.000	*Built-Up Roofing System (BUR)*										
0800	Aluminum coping, stock units, for 12" wall, excludes scaffolding	163.00	lf	5,440	1,001	-		-	-	39.516 /lf	6,441
2780	2" x 8" miscellaneous wood blocking, to steel construction, per M.B.F.	0.163	mbf	1,158	466	-		-	-	9,960.245 /mbf	1,624
2780	2" x 8" miscellaneous wood blocking, to steel construction, per M.B.F.	0.653	mbf	4,637	1,867	-		-	-	9,959.92 /mbf	6,504
2700	Elastomeric sheet waterproofing, polyvinyl chloride sheets, plain, 30 mils thick	1,258.00	SF	5,971	770	-		-	-	5.359 /SF	6,741

Central Kitsap Treatment Plant Solids Handling

Kitsap County

Detail Report with Contractor Markups

Item		Description	Takeoff Qty		Labor Amount	Material Amount	Subcontract Amount	Subcontract Name	Equipment Amount	Other Amount	Total Unit Cost	Total Amount
07 51 00.000		*Built-Up Roofing System (BUR)*										
	1725	Polyisocyanurate insulation, for roof decks, 2" thick, 2#/CF density, fastening excluded	1,258.00	sf	1,165	2,502	-		-	-	2.916 /sf	3,668
	1745	Polyisocyanurate insulation, for roof decks, 3" thick, 2#/CF density, fastening excluded	1,258.00	sf	1,284	3,742	-		-	-	3.995 /sf	5,026
	0825	Asphalt shingles, #30 felt underlayment	13.00	sq	298	301	-		-	-	46.035 /sq	598
	0100	Sheet metal flashing, aluminum, flexible, mill finish, .032" thick, including up to 4 bends	284.00	sf	2,601	3,201	-		-	-	20.431 /sf	5,802
		07 51 00.000 Built-Up Roofing System (BUR)			*22,554*	*13,851*					*28.938/SF*	*36,404*
		1,258.00 SF										
		178.016 Labor hours										
		07 51 00.000.20 Built Up Roofing System PVC x 1,258 SF			*22,554*	*13,851*	*0*		*0*	*0*	*28.938/SF*	*36,404*
		1,258.00 SF										
		178.016 Labor hours										
07 72 33.000.05		*Roof Hatch, 4' x 4'*										
07 72 33.000		*Roof Hatches*										
n	1120	Roof Hatches, with curb, 1" fiberglass insulation, galvanized steel curb and aluminum cover, 4' x 4'	2.00	EA	1,106	7,091	-		-	-	4,098.82 /EA	8,198
		07 72 33.000 Roof Hatches			*1,106*	*7,091*					*4,098.82 /EA*	*8,198*
		2.00 EA										
		8.00 Labor hours										
		07 72 33.000.05 Roof Hatch, 4' x 4'			*1,106*	*7,091*	*0*		*0*	*0*	*4,098.82 /EA*	*8,198*
		2.00 EA										
		8.00 Labor hours										
		DIVISION 07 THERMAL, MOISTURE PROTECTION			**23,660**	**20,942**	**0**		**0**	**0**	**35.455/SF**	**44,602**
		1,258.00 SF										
		186.016 Labor hours										
DIVISION 08			**OPENINGS**									
08 11 00.030.15		*(FOG BLDG) - Exterior Door, 3' x 7'*										
08 11 00.030		*Metal Doors & Frames (3070)*										
	1000	Frames, steel, knock down, hollow metal, single, 16 ga., up to 4-7/8" deep, 3'-0" x 7'-0"	2.00	EA	276	768	-		-	-	522.185 /EA	1,044

Central Kitsap Treatment Plant Solids Handling

Kitsap County

Detail Report with Contractor Markups

Item		Description	Takeoff Qty		Labor Amount	Material Amount	Subcontract Amount	Subcontract Name	Equipment Amount	Other Amount	Total Unit Cost	Total Amount
08 11 00.030		*Metal Doors & Frames (3070)*										
	5050	Doors, aluminum, commercial entrance, flush panel doors, single, 3'-0" x 7'-0", incl. hinges, push/pull, deadlock, cylinder, threshold, excl. glazing	2.00	ea	1,936	3,388	-		-	-	2,662.255 /ea	5,325
	3000	Door hardware, panic device, narrow stile, mortise bar, exit only	2.00	ea	552	2,364	-		-	-	1,458.04 /ea	2,916
	0011	Thresholds, aluminum, 3' long door saddles	6.00	lf	138	142	-		-	-	46.743 /lf	280
	1430	Door hardware, hinges, full mortise, high frequency, brass base, US10, 4-1/2" x 4-1/2"	3.00	pr	-	358	-		-	-	119.177 /pr	358
	1200	Paints & coatings, exterior, door & frame, one side, flush, 1 coat, 3' x 7'	2.00	ea	111	9	-		-	-	60.145 /ea	120
		08 11 00.030 Metal Doors & Frames (3070)			*3,014*	*7,029*					*5,021.62 /EA*	*10,043*
		2.00 EA										
		20.741 Labor hours										
		08 11 00.030.15 (FOG BLDG) - Exterior Door, 3' x 7'			*3,014*	*7,029*	*0*		*0*	*0*	*5,021.62 /EA*	*10,043*
		2.00 EA										
		20.741 Labor hours										
08 11 00.060.15		*(FOG BLDG) - Interior Door, 6' x 7'*										
08 11 00.060		*Metal Doors & Frames (6070)*										
	3620	Frames, steel, knock down, hollow metal, 14 gauge, up to 5-3/4" D, 7'-0" H, 6'-0" W, double	3.00	EA	552	1,389	-		-	-	647.003 /EA	1,941
	5100	Doors, aluminum, commercial entrance, flush panel doors, pair of, 3'-0" x 7'-0", incl. hinges, push/pull, deadlock, cylinder, threshold, excl. glazing	3.00	pr	3,631	9,603	-		-	-	4,411.20 /pr	13,234
	3000	Door hardware, panic device, narrow stile, mortise bar, exit only	6.00	ea	1,657	7,091	-		-	-	1,458.028 /ea	8,748
	0011	Thresholds, aluminum, 3' long door saddles	18.00	lf	414	427	-		-	-	46.75 /lf	842
	1430	Door hardware, hinges, full mortise, high frequency, brass base, US10, 4-1/2" x 4-1/2"	9.00	pr	-	1,073	-		-	-	119.171 /pr	1,073
	1200	Paints & coatings, exterior, door & frame, one side, flush, 1 coat, 3' x 7'	6.00	ea	334	27	-		-	-	60.145 /ea	361
		08 11 00.060 Metal Doors & Frames (6070)			*6,588*	*19,610*					*8,732.563/EA*	*26,198*
		3.00 EA										
		45.824 Labor hours										
		08 11 00.060.15 (FOG BLDG) - Interior Door, 6' x 7'			*6,588*	*19,610*	*0*		*0*	*0*	*8,732.563/EA*	*26,198*
		3.00 EA										
		45.824 Labor hours										
08 36 13.000.05		*(FOG BLDG) - Overhead Rollup Door, 8' x 8'*										
08 36 13.000		*Overhead Door - Sectional Aluminum*										

Central Kitsap Treatment Plant Solids Handling

Kitsap County

Detail Report with Contractor Markups

Item		Description	Takeoff Qty		Labor Amount	Material Amount	Subcontract Amount	Subcontract Name	Equipment Amount	Other Amount	Total Unit Cost	Total Amount
08 36 13.000		*Overhead Door - Sectional Aluminum*										
	0050	Doors, rolling service, steel, manual, 20 gauge, 8' x 8' high, incl. hardware	1.00	EA	1,513	2,413	-		-	-	3,925.85 /EA	3,926
	3300	Doors, rolling service, steel, manual, for enamel finish, add	64.00	sf	-	277	-		-	-	4.333 /sf	277
	3700	Doors, rolling service, steel, manual, for safety edge bottom bar, electric, add	8.00	lf	-	709	-		-	-	88.641 /lf	709
	4000	Doors, rolling service, steel, manual, for weatherstripping, extruded rubber, jambs, add	24.00	lf	-	742	-		-	-	30.925 /lf	742
	4500	Doors, rolling service, steel, manual, motor operators for, to 14' x 14' opening	1.00	ea	484	2,364	-		-	-	2,847.87 /ea	2,848
		08 36 13.000 Overhead Door - Sectional Aluminum			*1,997*	*6,505*					*8,502.40 /EA*	*8,502*
		1.00 EA										
		13.20 Labor hours										
		08 36 13.000.05 (FOG BLDG) - Overhead Rollup Door, 8' x 8'			*1,997*	*6,505*	*0*		*0*	*0*	*8,502.40 /EA*	*8,502*
		1.00 EA										
		13.20 Labor hours										
08 36 13.000.10		*Overhead Door, 10' x 10'*										
08 36 13.000		*Overhead Door - Sectional Aluminum*										
	0100	Doors, rolling service, steel, manual, 20 gauge, 10' x 10' high, incl. hardware	1.00	EA	1,729	3,940	-		-	-	5,668.55 /EA	5,669
	3300	Doors, rolling service, steel, manual, for enamel finish, add	100.00	sf	-	433	-		-	-	4.334 /sf	433
	3700	Doors, rolling service, steel, manual, for safety edge bottom bar, electric, add	10.00	lf	-	886	-		-	-	88.641 /lf	886
	4000	Doors, rolling service, steel, manual, for weatherstripping, extruded rubber, jambs, add	30.00	lf	-	928	-		-	-	30.926 /lf	928
	4500	Doors, rolling service, steel, manual, motor operators for, to 14' x 14' opening	1.00	ea	484	2,364	-		-	-	2,847.86 /ea	2,848
	4700	Doors, rolling service, steel, manual, for fire door, additional fusible link, add	1.00	ea	-	61	-		-	-	61.05 /ea	61
		08 36 13.000 Overhead Door - Sectional Aluminum			*2,213*	*8,612*					*10,825.00 /EA*	*10,825*
		1.00 EA										
		14.629 Labor hours										
		08 36 13.000.10 Overhead Door, 10' x 10'			*2,213*	*8,612*	*0*		*0*	*0*	*10,825.00 /EA*	*10,825*
		1.00 EA										
		14.629 Labor hours										
		DIVISION 08 OPENINGS			**13,813**	**41,756**	**0**		**0**	**0**	**7,938.333/EA**	**55,568**
		7.00 EA										

AACE Classification Accuracy Range

Upper Range +50% **Lower Range -30%**

Central Kitsap Treatment Plant Solids Handling

Kitsap County

Detail Report with Contractor Markups

Item		Description	Takeoff Qty		Labor Amount	Material Amount	Subcontract Amount	Subcontract Name	Equipment Amount	Other Amount	Total Unit Cost	Total Amount
		DIVISION 08 OPENINGS			**13,813**	**41,756**	**0**		**0**	**0**	**7,938.333/EA**	**55,568**
		7.00 EA										
		94.393 Labor hours										
DIVISION 31		**EARTHWORK**										
31.23.10.P005		*Excavation, Backfill, and Haul Off-Site*										
31 23 10.000		*Excavation, Backfill, and Haul Off-Site*										
n	6260	Strt excvt for minor strtr,bank measr,for sprd and mat ftngs,elvtr pits,and small bldng fndtn,sandy clay loam,2 cy bucket,machin excvtn,hydrlc backhoe	690.00	CY	6,415	-	-		5,398	-	17.121 /CY	11,813
	4010	Backfill, structural, sandy clay & loam, 200 H.P. dozer, 50' haul, from existing stockpile, excludes compaction	465.00	CY	292	-	-		510	-	1.726 /CY	803
	4060	Borrow, common earth, 1-1/2 C.Y. bucket, loading and/or spreading, front end loader, wheel-mounted	465.00	CY	734	6,770	-		361	-	16.912 /CY	7,864
n	0560	Hauling,excavated borrow material,loose cubic yards,20 mile round trip,0.4 load/hr,base wide rate,12 cy truck,highway haulers,excludes loading	275.00	CY	6,926	-	-		7,176	-	51.279 /CY	14,102
	0400	Compaction, structural, select fill, 8" lifts, sheepsfoot or wobbly wheel roller	465.00	CY	475	-	-		742	-	2.617 /CY	1,217
		31 23 10.000 Excavation, Backfill, and Haul Off-Site			*14,842*	*6,770*			*14,188*		*15.169/CY*	*35,799*
		2,360.00 CY										
		119.286 Labor hours										
		89.809 Equipment hours										
		31.23.10.P005 Excavation, Backfill, and Haul Off-Site			*14,842*	*6,770*	*0*		*14,188*	*0*	*15.169/CY*	*35,799*
		2,360.00 CY										
		119.286 Labor hours										
		89.809 Equipment hours										
31.23.19.P020		*Well Point Detwatering - 4 Months*										
31 23 19.020		*Dewatering - Wellpoint*										
n	1300	Wellpoints,complete installation,2"wellpoints,5'oc, 500'long header,8"diameter,includes one month operation,equipment rental,fuel and removal system	240.00	hdr	95,054	23,584	-		-	-	494.329 /hdr	118,639
	1400	Wellpoints, each additional month, 2" wellpoints, 5' O.C., 500' long header, 8" diameter, includes operation, equipment rental, and fuel	720.00	hdr	144,968	50,444	-		-	-	271.407 /hdr	195,413

Central Kitsap Treatment Plant Solids Handling

Kitsap County

Detail Report with Contractor Markups

Item	Description	Takeoff Qty		Labor Amount	Material Amount	Subcontract Amount	Subcontract Name	Equipment Amount	Other Amount	Total Unit Cost	Total Amount
	31 23 19.020 Dewatering - Wellpoint			*240,023*	*74,029*					*78,512.893/MO*	*314,052*
	4.00 MO										
	1,824.349 Labor hours										
	31.23.19.P020 Well Point Detwatering - 4 Months			*240,023*	*74,029*	*0*		*0*	*0*	*78,512.893/MO*	*314,052*
	4.00 MO										
	1,824.349 Labor hours										
	DIVISION 31 EARTHWORK			**254,864**	**80,799**	**0**		**14,188**	**0**	**148.242/CY**	**349,850**
	2,360.00 CY										
	1,943.635 Labor hours										
	89.809 Equipment hours										
DIVISION 46			**WATER AND WASTEWATER EQUIPMENT**								
43.23.57.050	*FOG Feed Pumps*										
43 23 57.000	*Progressive Cavity Pumps*										
n 0010	Progressive cavity feed pumps pump 60 gpm	4.00	EA	48,291	171,979	-		13,061		58,332.445 /EA	233,330
	43 23 57.000 Progressive Cavity Pumps			*48,291*	*171,979*			*13,061*		*58,332.445/EA*	*233,330*
	4.00 EA										
	320.00 Labor hours										
	64.00 Equipment hours										
	43.23.57.050 FOG Feed Pumps			*48,291*	*171,979*	*0*		*13,061*	*0*	*58,332.445/EA*	*233,330*
	4.00 EA										
	320.00 Labor hours										
	64.00 Equipment hours										
43.23.58.015	*Fog Transfer pumps*										
43 23 58.000	*Rotary Lobe Pumps*										
1000	Rotary Lobe pumps 660 gpm	2.00	EA	11,190	85,989	-		1,263	-	49,221.10 /EA	98,442
	43 23 58.000 Rotary Lobe Pumps			*11,190*	*85,989*			*1,263*		*49,221.10 /EA*	*98,442*
	2.00 EA										
	96.00 Labor hours										
	16.00 Equipment hours										
	43.23.58.015 Fog Transfer pumps			*11,190*	*85,989*	*0*		*1,263*	*0*	*49,221.10 /EA*	*98,442*
	2.00 EA										
	96.00 Labor hours										
	16.00 Equipment hours										

AACE Classification Accuracy Range

Upper Range +50% **Lower Range -30%**

Central Kitsap Treatment Plant Solids Handling

Kitsap County

Detail Report with Contractor Markups

Item	Description	Takeoff Qty		Labor Amount	Material Amount	Subcontract Amount	Subcontract Name	Equipment Amount	Other Amount	Total Unit Cost	Total Amount
44.51.00.004	*Truck Connection and Control*										
44 51 00.000	*Waste Collection, Transfer, and Hauling Equipment*										
2510	Truck Loading connection w/ control panel	1.00	EA	6,461	60,193	-		1,733	-	68,386.92 /EA	68,387
2510	Actuated pinch valve - manuf equipment w/ truck loadout	1.00	EA	2,961	25,797	-		794	-	29,552.59 /EA	29,553
	44 51 00.000 Waste Collection, Transfer, and Hauling Equipment			*9,423*	*85,989*			*2,527*		*48,969.755/EA*	*97,940*
	2.00 EA										
	70.00 Labor hours										
	70.00 Equipment hours										
	44.51.00.004 Truck Connection and Control			*9,423*	*85,989*	*0*		*2,527*	*0*	*48,969.755/EA*	*97,940*
	2.00 EA										
	70.00 Labor hours										
	70.00 Equipment hours										
44.51.00.008	*Screening Bin*										
44 51 04.000	*Packaged FOG Treatment*										
2510	Collection Bin	1.00	EA	538	10,319	-		144	-	11,001.59 /EA	11,002
	44 51 04.000 Packaged FOG Treatment			*538*	*10,319*			*144*			*11,002*
	4.00 Labor hours										
	4.00 Equipment hours										
	44.51.00.008 Screening Bin			*538*	*10,319*	*0*		*144*	*0*	*11,001.59 /EA*	*11,002*
	1.00 EA										
	4.00 Labor hours										
	4.00 Equipment hours										
44.51.04.005	*Fog Screening System*										
44 51 04.000	*Packaged FOG Treatment*										
1000	Packaged FOG screening & grit unit, SAVI Beast	1.00	EA	14,920	644,920	-		6,430	5,494	671,763.90 /EA	671,764
	44 51 04.000 Packaged FOG Treatment			*14,920*	*644,920*			*6,430*	*5,494*		*671,764*
	128.00 Labor hours										
	128.00 Equipment hours										
	44.51.04.005 Fog Screening System			*14,920*	*644,920*	*0*		*6,430*	*5,494*	*671,763.90 /EA*	*671,764*
	1.00 EA										
	128.00 Labor hours										
	128.00 Equipment hours										

Central Kitsap Treatment Plant Solids Handling

Kitsap County

Detail Report with Contractor Markups

Item	Description	Takeoff Qty	Labor Amount	Material Amount	Subcontract Amount	Subcontract Name	Equipment Amount	Other Amount	Total Unit Cost	Total Amount
	DIVISION 46 WATER AND WASTEWATER EQUIPMENT		**84,362**	**999,196**	**0**		**23,425**	**5,494**	**111,247.698/EA**	**1,112,477**
	10.00 EA									
	618.00 Labor hours									
	282.00 Equipment hours									
	819 FOG RECEIVING BUILDING		***636,764***	***1,413,070***	***0***		***46,204***	***5,494***	***2,101,532.44 /LS***	***2,101,532***
	1.00 LS									
	4,980.397 Labor hours									
	500.473 Equipment hours									

821 SEPTAGE HANDLING FACILITY

DIVISION 03 CONCRETE

03 11 13.504.30 Foundation Slab, 12" Thick x 120 SF

03 11 13.504		*12" Slab on Grade*									
	3050	C.I.P. concrete forms, slab on grade, edge, wood, 7" to 12" high, 4 use, includes erecting, bracing, stripping and cleaning	43.816	sfca	380	92	-	-	-	10.767 /sfca	472
n	9015	C.I.P. concrete forms, bulkhead for slab on grade w/ keyway, up to 12", exp metal, includes erecting, bracing, stripping and cleaning	6.00	sfca	31	5	-	-	-	5.943 /sfca	36
n	2050	Reinforcing steel, unload and sort, add to base_SLAB ON GRADE	0.438	ton	33	-	-	14	-	108.06 /ton	47
	0600	Reinforcing steel, in place, slab on grade, #3 to #7, A615, grade 60, incl labor for accessories, excl material for accessories	0.438	ton	824	1,092	-	-	-	4,374.018 /ton	1,916
	2220	Reinforcing steel, crane cost for handling, 90 picks/day, up to 0.5 Ton/day	0.438	ton	94	-	-	41	-	308.699 /ton	135
	4650	Structural concrete, placing, slab on grade, pumped, over 6" thick, includes leveling (strike off) & consolidation, excludes material	0.50	cy	19	-	-	2	-	41.50 /cy	21
	4650	Structural concrete, placing, slab on grade, pumped, over 6" thick, includes leveling (strike off) & consolidation, excludes material	5.00	cy	187	-	-	21	-	41.498 /cy	207
n	0725	Struct SLAB ON GRADE concrete,ready mix,normal wt,4500 psi,includes local aggregate,sand,portland cement and water,delivered, includes all additives	0.50	cy	-	198	-	-	-	395.54 /cy	198

Central Kitsap Treatment Plant Solids Handling

Kitsap County

Detail Report with Contractor Markups

Item		Description	Takeoff Qty		Labor Amount	Material Amount	Subcontract Amount	Subcontract Name	Equipment Amount	Other Amount	Total Unit Cost	Total Amount
03 11 13.504		*12" Slab on Grade*										
n	0725	Struct SLAB ON GRADE concrete,ready mix,normal wt,4500 psi,includes local aggregate,sand,portland cement and water,delivered, includes all additives	5.00	CY	-	1,978	-		-	-	395.556 /CY	1,978
n	0255	Concrete finishing, floors, manual screed, bull float, machine float & steel trowel (walk-behind)_SOG	119.99	sf	187	-	-		10	-	1.641 /sf	197
n	0122	Control joint, concrete floor slab, sawcut in green concrete, 1" depth_SOG	6.00	lf	6	0	-		1	-	1.082 /lf	6
n	0215	Control joint, clean out control joint of debris_SOG	6.00	lf	1	-	-			-	0.153 /lf	1
n	0367	Control joint, joint sealant, polyurethane, 1/4" x 1/4" (308 LF/Gal)_SOG	11.999	lf	41	3	-		-	-	3.719 /lf	45
n	0310	Concrete surface treatment, curing, sprayed membrane compound_SOG	1.20	csf	20	15	-		-	-	29.833 /csf	36
	1200	Vapor retarders, building paper, polyethylene vapor barrier, standard, 10 mil (.010" thick)	1.20	sq	32	17	-		-	-	40.708 /sq	49
n	1310	Fill, gravel fill, compacted, under floor slabs, alternate pricing method, 12" deep_SOG	5.00	ecy	116	275	-		10	-	80.206 /ecy	401
n	1136	Hauling, excavated borrow material, loose cubic yards, 20 mile round trip, 0.4 loads/hour, 16.5 c.y. dump trailer, highway haulers, excludes loading	5.00	lcy	87	-	-		97	-	36.846 /lcy	184
		03 11 13.504 12" Slab on Grade			*2,057*	*3,675*			*196*		*1,185.682/CY*	*5,928*
		5.00 CY										
		16.812 Labor hours										
		3.095 Equipment hours										
		03 11 13.504.30 Foundation Slab, 12" Thick x 120 SF			*2,057*	*3,675*	*0*		*196*	*0*	*1,185.682/CY*	*5,928*
		5.00 CY										
		16.812 Labor hours										
		3.095 Equipment hours										
03 11 13.801.10		*Concrete Wall, 8' High x 8" Thick x 10 LF*										
03 11 13.801		*08" CIP Wall*										
	0500	C.I.P. concrete forms, wall, wood bulkhead with 2 piece keyway, 1 use, includes erecting, bracing, stripping and cleaning	4.00	lf	88	23	-		-	-	27.768 /lf	111
	2550	C.I.P. concrete forms, wall, job built, plywood, over 8' to 16' high, 4 use, includes erecting, bracing, stripping and cleaning	160.00	sfca	2,353	272	-		-	-	16.408 /sfca	2,625
	5200	Chamfer strip, wood, 3/4" wide	8.00	lf	15	2	-		-	-	2.12 /lf	17
	1400	Tie cones, plastic, for coil tie system, for CIP wall forms, 1/2" bolt diameter x 1" setback length, includes material only	1.00	c	-	112	-		-	-	111.79 /c	112
n	3010	Waterstop, rubber, center bulb, 1/4" thick x 6" wide_WALLS	14.00	lf	95	181	-		-	-	19.709 /lf	276

Central Kitsap Treatment Plant Solids Handling

Kitsap County

Detail Report with Contractor Markups

	Item	Description	Takeoff Qty		Labor Amount	Material Amount	Subcontract Amount	Subcontract Name	Equipment Amount	Other Amount	Total Unit Cost	Total Amount
03 11 13.801		*08" CIP Wall*										
	0100	Splice rebar, standard, self-aligning type, taper threaded, #4 bars, includes holding rebar in place while splicing	2.20	ea	40	48	-		-	-	40.236 /ea	89
n	2020	Reinforcing steel, unload and sort, add to base_WALLS	0.20	ton	15	-	-		7	-	108.05 /ton	22
n	2214	Reinforcing steel, crane cost for handling, average, add_WALLS	0.20	ton	16	-	-		7	-	117.45 /ton	23
	0700	Reinforcing steel, in place, walls, #3 to #7, A615, grade 60, incl labor for accessories, excl material for accessories	0.20	ton	288	499	-		-	-	3,935.25 /ton	787
	5100	Structural concrete, placing, walls, pumped, 12" thick, includes leveling (strike off) & consolidation, excludes material	0.20	cy	13	-	-		1	-	69.95 /cy	14
	5100	Structural concrete, placing, walls, pumped, 12" thick, includes leveling (strike off) & consolidation, excludes material	2.00	cy	126	-	-		14	-	69.80 /cy	140
n	0525	Struct WALLS concrete,ready mix,normal wt,4500 psi,includes local aggregate,sand,portland cement and water,delivered, includes all additives	0.20	cy	-	79	-		-	-	395.55 /cy	79
n	0525	Struct WALLS concrete,ready mix,normal wt,4500 psi,includes local aggregate,sand,portland cement and water,delivered, includes all additives	2.00	CY	-	791	-		-	-	395.555 /CY	791
n	0210	Control joint, clean out control joint of debris_WALLS	4.00	lf	1	-	-			-	0.148 /lf	1
n	0366	Control joint, joint sealant, polyurethane, 1/4" x 1/4" (308 LF/Gal)_WALLS	4.00	lf	14	1	-		-	-	3.725 /lf	15
	0020	Concrete finishing, walls, includes breaking ties and patching voids	160.00	sf	276	11	-		-	-	1.792 /sf	287
	0050	Concrete finishing, walls, burlap rub with grout, includes breaking ties and patching voids	80.00	sf	165	6	-		-	-	2.137 /sf	171
		03 11 13.801 08" CIP Wall			*3,504*	*2,025*			*29*		*2,779.395/CY*	*5,559*
		2.00 CY										
		28.996 Labor hours										
		0.513 Equipment hours										
		03 11 13.801.10 Concrete Wall, 8' High x 8" Thick x 10 LF			*3,504*	*2,025*	*0*		*29*	*0*	*2,779.395/CY*	*5,559*
		2.00 CY										
		28.996 Labor hours										
		0.513 Equipment hours										
03 11 13.804.50		*Concrete Wall, 8' High x 12" Thick x 44 LF*										
03 11 13.804		*12" CIP Wall*										
	0500	C.I.P. concrete forms, wall, wood bulkhead with 2 piece keyway, 1 use, includes erecting, bracing, stripping and cleaning	18.00	lf	395	105	-		-	-	27.766 /lf	500

AACE Classification Accuracy Range

Upper Range +50% **Lower Range -30%**

Central Kitsap Treatment Plant Solids Handling

Kitsap County

Detail Report with Contractor Markups

	Item	Description	Takeoff Qty		Labor Amount	Material Amount	Subcontract Amount	Subcontract Name	Equipment Amount	Other Amount	Total Unit Cost	Total Amount
03 11 13.804		*12" CIP Wall*										
	2550	C.I.P. concrete forms, wall, job built, plywood, over 8' to 16' high, 4 use, includes erecting, bracing, stripping and cleaning	704.00	sfca	10,353	1,199	-		-	-	16.408 /sfca	11,552
	5200	Chamfer strip, wood, 3/4" wide	36.00	lf	68	9	-		-	-	2.121 /lf	76
	1400	Tie cones, plastic, for coil tie system, for CIP wall forms, 1/2" bolt diameter x 1" setback length, includes material only	1.00	c	-	112	-		-	-	111.79 /c	112
n	3010	Waterstop, rubber, center bulb, 1/4" thick x 6" wide_WALLS	62.00	lf	422	800	-		-	-	19.708 /lf	1,222
	0100	Splice rebar, standard, self-aligning type, taper threaded, #4 bars, includes holding rebar in place while splicing	15.40	ea	281	339	-		-	-	40.248 /ea	620
n	2020	Reinforcing steel, unload and sort, add to base_WALLS	1.40	ton	105	-	-		46	-	108.04 /ton	151
n	2214	Reinforcing steel, crane cost for handling, average, add_WALLS	1.40	ton	115	-	-		50	-	117.46 /ton	164
	0700	Reinforcing steel, in place, walls, #3 to #7, A615, grade 60, incl labor for accessories, excl material for accessories	1.40	ton	2,018	3,491	-		-	-	3,935.28 /ton	5,509
	5100	Structural concrete, placing, walls, pumped, 12" thick, includes leveling (strike off) & consolidation, excludes material	1.40	cy	88	-	-		10	-	69.814 /cy	98
	5100	Structural concrete, placing, walls, pumped, 12" thick, includes leveling (strike off) & consolidation, excludes material	14.00	cy	879	-	-		99	-	69.797 /cy	977
n	0525	Struct WALLS concrete,ready mix,normal wt,4500 psi,includes local aggregate,sand,portland cement and water,delivered, includes all additives	1.40	cy	-	554	-		-	-	395.54 /cy	554
n	0525	Struct WALLS concrete,ready mix,normal wt,4500 psi,includes local aggregate,sand,portland cement and water,delivered, includes all additives	14.00	CY	-	5,538	-		-	-	395.551 /CY	5,538
n	0210	Control joint, clean out control joint of debris_WALLS	18.00	lf	3	-	-			-	0.154 /lf	3
n	0366	Control joint, joint sealant, polyurethane, 1/4" x 1/4" (308 LF/Gal)_WALLS	18.00	lf	62	5	-		-	-	3.722 /lf	67
	0020	Concrete finishing, walls, includes breaking ties and patching voids	704.00	sf	1,213	48	-		-	-	1.792 /sf	1,262
	0050	Concrete finishing, walls, burlap rub with grout, includes breaking ties and patching voids	352.00	sf	728	24	-		-	-	2.137 /sf	752
		03 11 13.804 12" CIP Wall			*16,729*	*12,223*			*204*		*2,082.604/CY*	*29,156*
		14.00 CY										
		138.147 Labor hours										
		3.594 Equipment hours										
		03 11 13.804.50 Concrete Wall, 8' High x 12" Thick x 44 LF			*16,729*	*12,223*	*0*		*204*	*0*	*2,082.604/CY*	*29,156*
		14.00 CY										
		138.147 Labor hours										
		3.594 Equipment hours										

AACE Classification Accuracy Range

Upper Range +50% **Lower Range -30%**

Central Kitsap Treatment Plant Solids Handling

Kitsap County

Detail Report with Contractor Markups

	Item	Description	Takeoff Qty		Labor Amount	Material Amount	Subcontract Amount	Subcontract Name	Equipment Amount	Other Amount	Total Unit Cost	Total Amount
03 11 13.804.55		*Concrete Wall, 15' High x 12" Thick x 205 LF*										
03 11 13.804		*12" CIP Wall*										
	0500	C.I.P. concrete forms, wall, wood bulkhead with 2 piece keyway, 1 use, includes erecting, bracing, stripping and cleaning	154.00	lf	3,376	900	-		-	-	27.767 /lf	4,276
	2550	C.I.P. concrete forms, wall, job built, plywood, over 8' to 16' high, 4 use, includes erecting, bracing, stripping and cleaning	6,150.00	sfca	90,441	10,471	-		-	-	16.408 /sfca	100,912
	5200	Chamfer strip, wood, 3/4" wide	308.00	lf	579	74	-		-	-	2.122 /lf	653
	1400	Tie cones, plastic, for coil tie system, for CIP wall forms, 1/2" bolt diameter x 1" setback length, includes material only	6.00	c	-	671	-		-	-	111.783 /c	671
n	3010	Waterstop, rubber, center bulb, 1/4" thick x 6" wide_WALLS	359.00	lf	2,445	4,631	-		-	-	19.708 /lf	7,075
	0100	Splice rebar, standard, self-aligning type, taper threaded, #4 bars, includes holding rebar in place while splicing	125.40	ea	2,286	2,760	-		-	-	40.247 /ea	5,047
n	2020	Reinforcing steel, unload and sort, add to base_WALLS	11.40	ton	858	-	-		373	-	108.051 /ton	1,232
n	2214	Reinforcing steel, crane cost for handling, average, add_WALLS	11.40	ton	933	-	-		406	-	117.448 /ton	1,339
	0700	Reinforcing steel, in place, walls, #3 to #7, A615, grade 60, incl labor for accessories, excl material for accessories	11.40	ton	16,434	28,428	-		-	-	3,935.287 /ton	44,862
	5100	Structural concrete, placing, walls, pumped, 12" thick, includes leveling (strike off) & consolidation, excludes material	11.40	cy	715	-	-		80	-	69.798 /cy	796
	5100	Structural concrete, placing, walls, pumped, 12" thick, includes leveling (strike off) & consolidation, excludes material	114.00	cy	7,154	-	-		803	-	69.798 /cy	7,957
n	0525	Struct WALLS concrete,ready mix,normal wt,4500 psi,includes local aggregate,sand,portland cement and water,delivered, includes all additives	11.40	cy	-	4,509	-		-	-	395.553 /cy	4,509
n	0525	Struct WALLS concrete,ready mix,normal wt,4500 psi,includes local aggregate,sand,portland cement and water,delivered, includes all additives	114.00	CY	-	45,093	-		-	-	395.551 /CY	45,093
n	0210	Control joint, clean out control joint of debris_WALLS	154.00	lf	24	-	-			-	0.155 /lf	24
n	0366	Control joint, joint sealant, polyurethane, 1/4" x 1/4" (308 LF/Gal)_WALLS	154.00	lf	531	42	-		-	-	3.722 /lf	573
	0020	Concrete finishing, walls, includes breaking ties and patching voids	6,150.00	sf	10,600	423	-		-	-	1.792 /sf	11,023
	0050	Concrete finishing, walls, burlap rub with grout, includes breaking ties and patching voids	3,075.00	sf	6,360	212	-		-	-	2.137 /sf	6,571
		03 11 13.804 12" CIP Wall			*142,736*	*98,214*			*1,663*		*2,128.184/CY*	*242,613*

114.00 CY

1,179.284 Labor hours
29.263 Equipment hours

AACE Classification Accuracy Range

Upper Range +50% **Lower Range -30%**

Central Kitsap Treatment Plant Solids Handling

Kitsap County

Detail Report with Contractor Markups

Item	Description	Takeoff Qty		Labor Amount	Material Amount	Subcontract Amount	Name	Equipment Amount	Other Amount	Total Unit Cost	Total Amount
	03 11 13.804.55 Concrete Wall, 15' High x 12" Thick x 205 LF			*142,736*	*98,214*	*0*		*1,663*	*0*	*2,128.184/CY*	*242,613*
	114.00 CY										
	1,179.284 Labor hours										
	29.263 Equipment hours										
03 41 33.000.30	*Double Tee Roof x 1,515 SF*										
03 41 33.000	*Precast and Prestressed Concrete*										
0300	Precast tees, double, floor, 30' span, prestressed	5,257.99	SF	10,613	128,857	-		4,151	-	27.315 /SF	143,621
	03 41 33.000 Precast and Prestressed Concrete			*10,613*	*128,857*			*4,151*		*27.315/SF*	*143,621*
	5,257.99 SF										
	78.870 Labor hours										
	8.763 Equipment hours										
	03 41 33.000.30 Double Tee Roof x 1,515 SF			*10,613*	*128,857*	*0*		*4,151*	*0*	*27.315/SF*	*143,621*
	5,257.99 SF										
	78.870 Labor hours										
	8.763 Equipment hours										
03.11.20.005	*Retaining wall - Btwn infl box & Septage Screen*										
03 11 20.200	*CIP Retaining Wall - SF*										
0500	C.I.P. concrete forms, wall, wood bulkhead with 2 piece keyway, 1 use, includes erecting, bracing, stripping and cleaning	21.00	lf	460	123	-		-	-	27.766 /lf	583
2550	C.I.P. concrete forms, wall, job built, plywood, over 8' to 16' high, 4 use, includes erecting, bracing, stripping and cleaning	1,040.00	sfca	15,294	7,154	-		-	-	21.585 /sfca	22,448
5200	Chamfer strip, wood, 3/4" wide	42.00	lf	79	10	-		-	-	2.122 /lf	89
1400	Tie cones, plastic, for coil tie system, for CIP wall forms, 1/2" bolt diameter x 1" setback length, includes material only	1.00	c	-	112	-		-	-	111.78 /c	112
0100	Splice rebar, standard, self-aligning type, taper threaded, #4 bars, includes holding rebar in place while splicing	26.40	ea	481	581	-		-	-	40.247 /ea	1,063
n 2020	Reinforcing steel, unload and sort, add to base_WALLS	2.76	ton	208	-	-		90	-	108.043 /ton	298
n 2214	Reinforcing steel, crane cost for handling, average, add_WALLS	2.76	ton	226	-	-		98	-	117.457 /ton	324
0700	Reinforcing steel, in place, walls, #3 to #7, A615, grade 60, incl labor for accessories, excl material for accessories	2.76	ton	3,979	6,883	-		-	-	3,935.283 /ton	10,861
5100	Structural concrete, placing, walls, pumped, 12" thick, includes leveling (strike off) & consolidation, excludes material	24.00	cy	1,506	-	-		169	-	69.798 /cy	1,675

Central Kitsap Treatment Plant Solids Handling

Kitsap County

Detail Report with Contractor Markups

	Item	Description	Takeoff Qty		Labor Amount	Material Amount	Subcontract Amount	Subcontract Name	Equipment Amount	Other Amount	Total Unit Cost	Total Amount
03 11 20.200		*CIP Retaining Wall - SF*										
	5100	Structural concrete, placing, walls, pumped, 12" thick, includes leveling (strike off) & consolidation, excludes material	2.40	cy	151	-	-		17	-	69.80 /cy	168
	5100	Structural concrete, placing, footing pumped, 12" thick, includes leveling (strike off) & consolidation, excludes material	20.00	cy	1,255	-	-		141	-	69.798 /cy	1,396
n	0525	Struct WALLS concrete,ready mix,normal wt,4500 psi,includes local aggregate,sand,portland cement and water,delivered, includes all additives	24.00	CY	-	9,493	-		-	-	395.551 /CY	9,493
n	0525	Struct WALLS concrete,ready mix,normal wt,4500 psi,includes local aggregate,sand,portland cement and water,delivered, includes all additives	2.40	CY	-	949	-		-	-	395.554 /CY	949
n	0525	Struct Footing concrete,ready mix,normal wt,4500 psi,includes local aggregate,sand,portland cement and water,delivered, includes all additives	20.00	CY	-	7,911	-		-	-	395.55 /CY	7,911
n	0210	Control joint, clean out control joint of debris_WALLS	21.00	lf	3	-	-			-	0.155 /lf	3
n	0366	Control joint, joint sealant, polyurethane, 1/4" x 1/4" (308 LF/Gal)_WALLS	21.00	lf	72	6	-		-	-	3.722 /lf	78
	0020	Concrete finishing, walls, includes breaking ties and patching voids	840.00	sf	1,448	58	-		-	-	1.792 /sf	1,506
	0050	Concrete finishing, walls, burlap rub with grout, includes breaking ties and patching voids	420.00	sf	869	29	-		-	-	2.137 /sf	898
n	6035	Strt excvt for minor strtr,bank measr,for sprd and mat ftngs,elvtr pits,and small bldng fndtns,common earth,3/4 cy bucket,machin excvtn,hydrlc backhoe	150.00	bcy	3,196	-	-		1,932	-	34.186 /bcy	5,128
		03 11 20.200 CIP Retaining Wall - SF			*29,227*	*33,309*			*2,448*			*64,983*
		242.160 Labor hours 23.918 Equipment hours										
		03.11.20.005 Retaining wall - Btwn infl box & Septage Screen			*29,227*	*33,309*	*0*		*2,448*	*0*	*1,400.501/CY*	*64,983*
		46.40 CY										
		242.160 Labor hours 23.918 Equipment hours										
		DIVISION 03 CONCRETE			**204,866**	**278,304**	**0**		**8,691**	**0**	**2,711.471/CY**	**491,861**
		181.40 CY										
		1,684.269 Labor hours 69.147 Equipment hours										

DIVISION 07 THERMAL, MOISTURE PROTECTION

07 51 00.000.30 *SEPTAGE EQU - Built Up Roofing System PVC x 1,515 SF*

AACE Classification Accuracy Range

Upper Range +50% **Lower Range -30%**

Central Kitsap Treatment Plant Solids Handling

Kitsap County

Detail Report with Contractor Markups

Item		Description	Takeoff Qty		Labor Amount	Material Amount	Subcontract Amount	Subcontract Name	Equipment Amount	Other Amount	Total Unit Cost	Total Amount
07 51 00.000		*Built-Up Roofing System (BUR)*										
	0800	Aluminum coping, stock units, for 12" wall, excludes scaffolding	179.00	lf	5,974	1,100	-		-	-	39.516 /lf	7,073
	2780	2" x 8" miscellaneous wood blocking, to steel construction, per M.B.F.	0.179	mbf	1,271	512	-		-	-	9,960.06 /mbf	1,783
	2780	2" x 8" miscellaneous wood blocking, to steel construction, per M.B.F.	0.716	mbf	5,085	2,047	-		-	-	9,959.92 /mbf	7,131
	2700	Elastomeric sheet waterproofing, polyvinyl chloride sheets, plain, 30 mils thick	1,515.00	SF	7,191	927	-		-	-	5.359 /SF	8,119
	1725	Polyisocyanurate insulation, for roof decks, 2" thick, 2#/CF density, fastening excluded	1,515.00	sf	1,404	3,014	-		-	-	2.916 /sf	4,417
	1745	Polyisocyanurate insulation, for roof decks, 3" thick, 2#/CF density, fastening excluded	1,515.00	sf	1,546	4,507	-		-	-	3.995 /sf	6,053
	0825	Asphalt shingles, #30 felt underlayment	15.00	sq	343	347	-		-	-	46.034 /sq	691
	0100	Sheet metal flashing, aluminum, flexible, mill finish, .032" thick, including up to 4 bends	311.00	sf	2,848	3,506	-		-	-	20.431 /sf	6,354
		07 51 00.000 Built-Up Roofing System (BUR)			*25,662*	*15,958*					*27.472/SF*	*41,620*
		1,515.00 SF										
		202.772 Labor hours										
		07 51 00.000.30 SEPTAGE EQU - Built Up Roofing System PVC x 1,515 SF			*25,662*	*15,958*	*0*		*0*	*0*	*27.472/SF*	*41,620*
		1,515.00 SF										
		202.772 Labor hours										
07 72 33.000.10		*Roof Hatch, 4' x 4'*										
07 72 33.000		*Roof Hatches*										
n	1120	Roof Hatches, with curb, 1" fiberglass insulation, galvanized steel curb and aluminum cover, 4' x 4'	6.00	EA	3,319	21,274	-		-	-	4,098.82 /EA	24,593
		07 72 33.000 Roof Hatches			*3,319*	*21,274*					*4,098.82 /EA*	*24,593*
		6.00 EA										
		24.00 Labor hours										
		07 72 33.000.10 Roof Hatch, 4' x 4'			*3,319*	*21,274*	*0*		*0*	*0*	*4,098.82 /EA*	*24,593*
		6.00 EA										
		24.00 Labor hours										
		DIVISION 07 THERMAL, MOISTURE PROTECTION			**28,981**	**37,232**	**0**		**0**	**0**	**43.705/SF**	**66,213**
		1,515.00 SF										
		226.772 Labor hours										

AACE Classification Accuracy Range

Upper Range +50% **Lower Range -30%**

Central Kitsap Treatment Plant Solids Handling

Kitsap County

Detail Report with Contractor Markups

Item		Description	Takeoff Qty		Labor Amount	Material Amount	Subcontract Amount	Subcontract Name	Equipment Amount	Other Amount	Total Unit Cost	Total Amount
DIVISION 08		**OPENINGS**										
08.31.00.P005		*Septage Handling Facility - Access Doors - 3' x 3'*										
08 31 00.005		*Access Door - Single Leaf - 3' x 3'*										
	0050	Doors, specialty, access, floor, industrial, steel, 300 psf L.L., single leaf, 3' x 3', 300 lb	6.00	EA	2,641	16,546	-		-	-	3,197.808 /EA	19,187
		08 31 00.005 Access Door - Single Leaf - 3' x 3'			*2,641*	*16,546*					*3,197.808/EA*	*19,187*
		6.00 EA										
		17.455 Labor hours										
		08.31.00.P005 Septage Handling Facility - Access Doors - 3' x 3'			*2,641*	*16,546*	*0*		*0*	*0*	*3,197.808/EA*	*19,187*
		6.00 EA										
		17.455 Labor hours										
		DIVISION 08 OPENINGS			**2,641**	**16,546**	**0**		**0**	**0**	**3,197.808/EA**	**19,187**
		6.00 EA										
		17.455 Labor hours										
DIVISION 31		**EARTHWORK**										
31.23.10.P005		*Excavation, Backfill, and Haul Off-Site*										
31 23 10.000		*Excavation, Backfill, and Haul Off-Site*										
n	6260	Strt excvt for minor strtr,bank measr,for sprd and mat ftngs,elvtr pits,and small bldng fndtn,sandy clay loam,2 cy bucket,machin excvtn,hydrlc backhoe	2,555.00	CY	23,754	-	-		19,989	-	17.121 /CY	43,744
	4010	Backfill, structural, sandy clay & loam, 200 H.P. dozer, 50' haul, from existing stockpile, excludes compaction	1,550.00	CY	975	-	-		1,701	-	1.726 /CY	2,675
	4060	Borrow, common earth, 1-1/2 C.Y. bucket, loading and/or spreading, front end loader, wheel-mounted	1,550.00	CY	2,447	22,565	-		1,202	-	16.912 /CY	26,214
n	0560	Hauling,excavated borrow material,loose cubic yards,20 mile round trip,0.4 load/hr,base wide rate,12 cy truck,highway haulers,excludes loading	1,260.00	CY	31,731	-	-		32,880	-	51.279 /CY	64,611
	0400	Compaction, structural, select fill, 8" lifts, sheepsfoot or wobbly wheel roller	1,550.00	CY	1,582	-	-		2,474	-	2.617 /CY	4,057
		31 23 10.000 Excavation, Backfill, and Haul Off-Site			*60,489*	*22,565*			*58,246*		*16.692/CY*	*141,301*
		8,465.00 CY										
		486.937 Labor hours										
		379.236 Equipment hours										

AACE Classification Accuracy Range

Upper Range +50% **Lower Range -30%**

Central Kitsap Treatment Plant Solids Handling

Kitsap County

Detail Report with Contractor Markups

Item		Description	Takeoff Qty		Labor Amount	Material Amount	Subcontract Amount	Name	Equipment Amount	Other Amount	Total Unit Cost	Total Amount
		31.23.10.P005 Excavation, Backfill, and Haul Off-Site			*60,489*	*22,565*	*0*		*58,246*	*0*	*16.692/CY*	*141,301*
		8,465.00 CY										
		486.937 Labor hours										
		379.236 Equipment hours										
31.23.19.P015		*Well Point Detwatering - 4 Months*										
31 23 19.020		*Dewatering - Wellpoint*										
n	1300	Wellpoints,complete installation,2"wellpoints,5'oc, 500'long header,8"diameter,includes one month operation,equipment rental,fuel and removal system	300.00	hdr	118,818	29,481	-		-	-	494.329 /hdr	148,299
	1400	Wellpoints, each additional month, 2" wellpoints, 5' O.C., 500' long header, 8" diameter, includes operation, equipment rental, and fuel	900.00	hdr	181,210	63,056	-		-	-	271.407 /hdr	244,266
		31 23 19.020 Dewatering - Wellpoint			*300,028*	*92,536*					*98,141.11 /MO*	*392,564*
		4.00 MO										
		2,280.436 Labor hours										
		31.23.19.P015 Well Point Detwatering - 4 Months			*300,028*	*92,536*	*0*		*0*	*0*	*98,141.11 /MO*	*392,564*
		4.00 MO										
		2,280.436 Labor hours										
		DIVISION 31 EARTHWORK			**360,518**	**115,101**	**0**		**58,246**	**0**	**63.067/CY**	**533,866**
		8,465.00 CY										
		2,767.373 Labor hours										
		379.236 Equipment hours										
DIVISION 33		**UTILITIES (BURIED PIPE AND VALVES)**										
33.05.15.005		*Equalization Valve Vault*										
33 05 15.030		*Precast Utility Vault*										
	0100	Utility structures, utility vaults precast concrete, excludes excavation and backfill	1.00	EA	3,229	8,189	-		1,742	-	13,159.54 /EA	13,160
		33 05 15.030 Precast Utility Vault			*3,229*	*8,189*			*1,742*		*13,159.54 /EA*	*13,160*
		1.00 EA										
		28.00 Labor hours										
		4.00 Equipment hours										

Central Kitsap Treatment Plant Solids Handling

Kitsap County

Detail Report with Contractor Markups

Item	Description	Takeoff Qty		Labor Amount	Material Amount	Subcontract Amount	Subcontract Name	Equipment Amount	Other Amount	Total Unit Cost	Total Amount
	33.05.15.005 Equalization Valve Vault			*3,229*	*8,189*	*0*		*1,742*	*0*	*13,159.54 /EA*	*13,160*
	1.00 EA										
	28.00 Labor hours										
	4.00 Equipment hours										
	DIVISION 33 UTILITIES (BURIED PIPE AND VALVES)			**3,229**	**8,189**	**0**		**1,742**	**0**		**13,160**
	28.00 Labor hours										
	4.00 Equipment hours										
DIVISION 40	**PROCESS INTEGRATION (EXPOSED PIPE, VALVES AND GATES)**										
40.05.58.005	*EQ Tank Effluent Gate*										
40 05 58.030	*Slide Gates*										
150	Slide gates, steel,self cntnd, MO,incl anchr bolts&grout	2.00	EA	7,719	33,811	-		2,866	-	22,197.745 /EA	44,395
	40 05 58.030 Slide Gates			*7,719*	*33,811*			*2,866*		*22,197.745/EA*	*44,395*
	2.00 EA										
	56.00 Labor hours										
	12.00 Equipment hours										
	40.05.58.005 EQ Tank Effluent Gate			*7,719*	*33,811*	*0*		*2,866*	*0*	*22,197.745/EA*	*44,395*
	2.00 EA										
	56.00 Labor hours										
	12.00 Equipment hours										
	DIVISION 40 PROCESS INTEGRATION (EXPOSED PIPE, VALVES AND GATES)			**7,719**	**33,811**	**0**		**2,866**	**0**		**44,395**
	56.00 Labor hours										
	12.00 Equipment hours										
DIVISION 46	**WATER AND WASTEWATER EQUIPMENT**										
43.23.57.010	*Septage Equalization Pumps*										
43 23 57.000	*Progressive Cavity Pumps*										
n 0010	Progressive cavity transfer pump	2.00	EA	24,145	120,385	-		6,530	0	75,530.31 /EA	151,061
	43 23 57.000 Progressive Cavity Pumps			*24,145*	*120,385*			*6,530*		*75,530.31 /EA*	*151,061*
	2.00 EA										
	160.00 Labor hours										
	32.00 Equipment hours										

AACE Classification Accuracy Range

Upper Range +50% **Lower Range -30%**

Central Kitsap Treatment Plant Solids Handling

Kitsap County

Detail Report with Contractor Markups

Item	Description	Takeoff Qty		Labor Amount	Material Amount	Subcontract Amount	Subcontract Name	Equipment Amount	Other Amount	Total Unit Cost	Total Amount
	43.23.57.010 Septage Equalization Pumps			*24,145*	*120,385*	*0*		*6,530*	*0*	*75,530.31 /EA*	*151,061*
	2.00 EA										
	160.00 Labor hours										
	32.00 Equipment hours										
44.51.00.002	*Septic Influent box w/ barscreen*										
44 51 00.000	*Waste Collection, Transfer, and Hauling Equipment*										
2510	Influet box - fabricated for septage influent	3.00	EA	23,422	134,143	-		13,657	-	57,074.317 /EA	171,223
0100	Mechanically Cleaned Filter Screen, 20mgd, 6mm nominal opening, Channel width 4'x 7.5' Deep, Discharg 4'	3.00	ea	2,798	248,165	-		271	-	83,744.413 /ea	251,233
	44 51 00.000 Waste Collection, Transfer, and Hauling Equipment			*26,220*	*382,308*			*13,928*		*140,818.730/EA*	*422,456*
	3.00 EA										
	198.00 Labor hours										
	177.429 Equipment hours										
	44.51.00.002 Septic Influent box w/ barscreen			*26,220*	*382,308*	*0*		*13,928*	*0*	*140,818.730/EA*	*422,456*
	3.00 EA										
	198.00 Labor hours										
	177.429 Equipment hours										
44.51.00.004	*Truck Connection and Control*										
44 51 00.000	*Waste Collection, Transfer, and Hauling Equipment*										
2510	Truck Loading connection w/ control panel	2.00	EA	12,923	120,385	-		3,466	-	68,386.935 /EA	136,774
	44 51 00.000 Waste Collection, Transfer, and Hauling Equipment			*12,923*	*120,385*			*3,466*		*68,386.935/EA*	*136,774*
	2.00 EA										
	96.00 Labor hours										
	96.00 Equipment hours										
	44.51.00.004 Truck Connection and Control			*12,923*	*120,385*	*0*		*3,466*	*0*	*68,386.935/EA*	*136,774*
	2.00 EA										
	96.00 Labor hours										
	96.00 Equipment hours										
44.51.00.008	*Screening Bin*										
44 51 00.000	*Waste Collection, Transfer, and Hauling Equipment*										
2510	Manual Bar Screen Collection Bin	1.00	EA	538	10,319	-		144	-	11,001.59 /EA	11,002

Central Kitsap Treatment Plant Solids Handling

Kitsap County

Detail Report with Contractor Markups

Item		Description	Takeoff Qty		Labor Amount	Material Amount	Subcontract Amount	Subcontract Name	Equipment Amount	Other Amount	Total Unit Cost	Total Amount
		44 51 00.000 Waste Collection, Transfer, and Hauling Equipment			*538*	*10,319*			*144*		*11,001.59 /EA*	*11,002*
		1.00 EA										
		4.00 Labor hours										
		4.00 Equipment hours										
44 51 02.000		*Packaged Septage Treatment*										
	2510	Manual Bar Screen Collection Bin	2.00	ea	1,077	20,637	-		289	-	11,001.59 /ea	22,003
		44 51 02.000 Packaged Septage Treatment			*1,077*	*20,637*			*289*			*22,003*
		8.00 Labor hours										
		8.00 Equipment hours										
		44.51.00.008 Screening Bin			*1,615*	*30,956*	*0*		*433*	*0*	*33,004.770/EA*	*33,005*
		1.00 EA										
		12.00 Labor hours										
		12.00 Equipment hours										
44.51.05.005		*Septage Screen & Degrit System*										
44 51 02.000		*Packaged Septage Treatment*										
	1000	Packaged septage screening & grit unit, Raptor 31CPSAG	2.00	EA	29,840	1,905,523	-		12,860	-	974,111.365 /EA	1,948,223
		44 51 02.000 Packaged Septage Treatment			*29,840*	*1,905,523*			*12,860*		*974,111.365/EA*	*1,948,223*
		2.00 EA										
		256.00 Labor hours										
		256.00 Equipment hours										
		44.51.05.005 Septage Screen & Degrit System			*29,840*	*1,905,523*	*0*		*12,860*	*0*	*974,111.365/EA*	*1,948,223*
		2.00 EA										
		256.00 Labor hours										
		256.00 Equipment hours										
46.41.00.005		*EQ Tank Mixers*										
46 41 00.000		*Submersible Mixers*										
	0010	Tank Mixer, submersible compact unit	2.00	EA	19,442	130,704	-			1,127	75,636.570 /EA	151,273
		46 41 00.000 Submersible Mixers			*19,442*	*130,704*				*1,127*	*75,636.570/EA*	*151,273*
		2.00 EA										
		128.00 Labor hours										
		46.41.00.005 EQ Tank Mixers			*19,442*	*130,704*	*0*		*0*	*1,127*	*75,636.570/EA*	*151,273*
		2.00 EA										
		128.00 Labor hours										

AACE Classification Accuracy Range

Upper Range +50% **Lower Range -30%**

Central Kitsap Treatment Plant Solids Handling

Kitsap County

Detail Report with Contractor Markups

Item	Description	Takeoff Qty	Labor Amount	Material Amount	Subcontract Amount	Subcontract Name	Equipment Amount	Other Amount	Total Unit Cost	Total Amount
	DIVISION 46 WATER AND WASTEWATER EQUIPMENT		**114,186**	**2,690,261**	**0**		**37,217**	**1,127**	**236,899.277/EA**	**2,842,791**
	12.00 EA									
	850.00 Labor hours									
	573.429 Equipment hours									
	821 SEPTAGE HANDLING FACILITY		***722,139***	***3,179,445***	***0***		***108,762***	***1,127***	***4,011,473.07 /LS***	***4,011,473***
	1.00 LS									
	5,629.868 Labor hours									
	1,037.811 Equipment hours									

823 SEPTAGE INFLUENT BOX

DIVISION 03 **CONCRETE**

03 09 00.885.05 *Concrete Fill Transverse Section, 5'-5" Thick x 33 SF*

Item	Description	Takeoff Qty	Labor Amount	Material Amount	Subcontract Amount	Equipment Amount	Other Amount	Total Unit Cost	Total Amount
03 09 00.885	*Concrete_Grout/Flowable Fill*								
4350	Structural concrete, placing, slab on grade, pumped, up to 6" thick, includes leveling (strike off) & consolidation, excludes material	79.457 CY	4,219	-	-	474	-	59.060 /CY	4,693
n 4350	Strt concret,ready mix,flowabl fill,strt,1000 psi,includs ash,portlnd cement type i,aggregt,sand and water,delivrd,excluds all additvs and treatments (Flow Fill)	79.457 cy	-	11,479	-	-	-	144.462 /cy	11,479
	03 09 00.885 Concrete_Grout/Flowable Fill		*4,219*	*11,479*		*474*		*203.522/CY*	*16,171*
	79.457 CY								
	39.117 Labor hours								
	14.669 Equipment hours								
	03 09 00.885.05 Concrete Fill Transverse Section, 5'-5" Thick x 33 SF		*4,219*	*11,479*	*0*	*474*	*0*	*203.522/CY*	*16,171*
	79.457 CY								
	39.117 Labor hours								
	14.669 Equipment hours								

03 09 00.885.10 *Concrete Fill, 2' Thick x 34 SF*

Item	Description	Takeoff Qty	Labor Amount	Material Amount	Subcontract Amount	Equipment Amount	Other Amount	Total Unit Cost	Total Amount
03 09 00.885	*Concrete_Grout/Flowable Fill*								
4350	Structural concrete, placing, slab on grade, pumped, up to 6" thick, includes leveling (strike off) & consolidation, excludes material	30.223 CY	1,605	-	-	180	-	59.060 /CY	1,785

Central Kitsap Treatment Plant Solids Handling

Kitsap County

Detail Report with Contractor Markups

Item		Description	Takeoff Qty		Labor Amount	Material Amount	Subcontract Amount	Subcontract Name	Equipment Amount	Other Amount	Total Unit Cost	Total Amount
03 09 00.885		*Concrete_Grout/Flowable Fill*										
n	4350	Strt concret,ready mix,flowabl fill,strt,1000 psi,includs ash,portlnd cement type i,aggregt,sand and water,delivrd,excluds all additvs and treatments (Flow Fill)	30.223	cy	-	4,366	-		-	-	144.462 /cy	4,366
		03 09 00.885 Concrete_Grout/Flowable Fill			*1,605*	*4,366*			*180*		*203.522/CY*	*6,151*
		30.223 CY										
		14.879 Labor hours										
		5.580 Equipment hours										
		03 09 00.885.10 Concrete Fill, 2' Thick x 34 SF			*1,605*	*4,366*	*0*		*180*	*0*	*203.522/CY*	*6,151*
		30.223 CY										
		14.879 Labor hours										
		5.580 Equipment hours										
03 11 13.504.35		*(Septage EQU) Lower Level Slab, 12" Thick x 314 SF*										
03 11 13.504		*12" Slab on Grade*										
	3050	C.I.P. concrete forms, slab on grade, edge, wood, 7" to 12" high, 4 use, includes erecting, bracing, stripping and cleaning	70.88	sfca	614	149	-		-	-	10.767 /sfca	763
n	9015	C.I.P. concrete forms, bulkhead for slab on grade w/ keyway, up to 12", exp metal, includes erecting, bracing, stripping and cleaning	15.70	sfca	81	12	-		-	-	5.938 /sfca	93
n	2050	Reinforcing steel, unload and sort, add to base_SLAB ON GRADE	1.05	ton	79	-	-		34	-	108.04 /ton	113
	0600	Reinforcing steel, in place, slab on grade, #3 to #7, A615, grade 60, incl labor for accessories, excl material for accessories	1.05	ton	1,974	2,618	-		-	-	4,374.01 /ton	4,593
	2220	Reinforcing steel, crane cost for handling, 90 picks/day, up to 0.5 Ton/day	1.05	ton	226	-	-		98	-	308.74 /ton	324
	4650	Structural concrete, placing, slab on grade, pumped, over 6" thick, includes leveling (strike off) & consolidation, excludes material	12.00	cy	448	-	-		50	-	41.502 /cy	498
	4650	Structural concrete, placing, slab on grade, pumped, over 6" thick, includes leveling (strike off) & consolidation, excludes material	1.20	cy	45	-	-		5	-	41.50 /cy	50
n	0725	Struct SLAB ON GRADE concrete,ready mix,normal wt,4500 psi,includes local aggregate,sand,portland cement and water,delivered, includes all additives	1.20	cy	-	475	-		-	-	395.533 /cy	475
n	0725	Struct SLAB ON GRADE concrete,ready mix,normal wt,4500 psi,includes local aggregate,sand,portland cement and water,delivered, includes all additives	12.00	CY	-	4,747	-		-	-	395.552 /CY	4,747
n	0255	Concrete finishing, floors, manual screed, bull float, machine float & steel trowel (walk-behind)_SOG	313.998	sf	489	-	-		27	-	1.641 /sf	515

Central Kitsap Treatment Plant Solids Handling

Kitsap County

Detail Report with Contractor Markups

Item		Description	Takeoff Qty		Labor Amount	Material Amount	Subcontract Amount	Subcontract Name	Equipment Amount	Other Amount	Total Unit Cost	Total Amount
03 11 13.504		*12" Slab on Grade*										
n	0122	Control joint, concrete floor slab, sawcut in green concrete, 1" depth_SOG	15.70	lf	15	1	-		1	-	1.076 /lf	17
n	0215	Control joint, clean out control joint of debris_SOG	15.70	lf	2	-	-			-	0.154 /lf	2
n	0367	Control joint, joint sealant, polyurethane, 1/4" x 1/4" (308 LF/Gal)_SOG	31.40	lf	108	9	-		-	-	3.722 /lf	117
n	0310	Concrete surface treatment, curing, sprayed membrane compound_SOG	3.14	csf	53	40	-		-	-	29.834 /csf	94
	1200	Vapor retarders, building paper, polyethylene vapor barrier, standard, 10 mil (.010" thick)	3.14	sq	84	44	-		-	-	40.697 /sq	128
n	1310	Fill, gravel fill, compacted, under floor slabs, alternate pricing method, 12" deep_SOG	13.00	ecy	302	715	-		25	-	80.205 /ecy	1,043
n	1136	Hauling, excavated borrow material, loose cubic yards, 20 mile round trip, 0.4 loads/hour, 16.5 c.y. dump trailer, highway haulers, excludes loading	13.00	lcy	226	-	-		253	-	36.848 /lcy	479
		03 11 13.504 12" Slab on Grade			*4,746*	*8,810*			*494*		*1,170.867/CY*	*14,050*
		12.00 CY										
		38.785 Labor hours										
		7.887 Equipment hours										
		03 11 13.504.35 (Septage EQU) Lower Level Slab, 12" Thick x 314 SF			*4,746*	*8,810*	*0*		*494*	*0*	*1,170.867/CY*	*14,050*
		12.00 CY										
		38.785 Labor hours										
		7.887 Equipment hours										
03 11 13.504.40		*(Septage EQU) Foundation Slab, 12" Thick x 1,515 SF*										
03 11 13.504		*12" Slab on Grade*										
	3050	C.I.P. concrete forms, slab on grade, edge, wood, 7" to 12" high, 4 use, includes erecting, bracing, stripping and cleaning	155.692	sfca	1,350	327	-		-	-	10.767 /sfca	1,676
n	9015	C.I.P. concrete forms, bulkhead for slab on grade w/ keyway, up to 12", exp metal, includes erecting, bracing, stripping and cleaning	75.75	sfca	391	59	-		-	-	5.938 /sfca	450
n	2050	Reinforcing steel, unload and sort, add to base_SLAB ON GRADE	4.988	ton	376	-	-		163	-	108.053 /ton	539
	0600	Reinforcing steel, in place, slab on grade, #3 to #7, A615, grade 60, incl labor for accessories, excl material for accessories	4.988	ton	9,379	12,439	-		-	-	4,374.034 /ton	21,818
	2220	Reinforcing steel, crane cost for handling, 90 picks/day, up to 0.5 Ton/day	4.988	ton	1,073	-	-		467	-	308.713 /ton	1,540
	4650	Structural concrete, placing, slab on grade, pumped, over 6" thick, includes leveling (strike off) & consolidation, excludes material	5.70	cy	213	-	-		24	-	41.50 /cy	237
	4650	Structural concrete, placing, slab on grade, pumped, over 6" thick, includes leveling (strike off) & consolidation, excludes material	57.00	cy	2,127	-	-		239	-	41.502 /cy	2,366

Central Kitsap Treatment Plant Solids Handling

Kitsap County

Detail Report with Contractor Markups

	Item	Description	Takeoff Qty		Labor Amount	Material Amount	Subcontract Amount	Subcontract Name	Equipment Amount	Other Amount	Total Unit Cost	Total Amount
03 11 13.504		*12" Slab on Grade*										
n	0725	Struct SLAB ON GRADE concrete,ready mix,normal wt,4500 psi,includes local aggregate,sand,portland cement and water,delivered, includes all additives	57.00	CY	-	22,546	-		-	-	395.551 /CY	22,546
n	0725	Struct SLAB ON GRADE concrete,ready mix,normal wt,4500 psi,includes local aggregate,sand,portland cement and water,delivered, includes all additives	5.70	cy	-	2,255	-		-	-	395.547 /cy	2,255
n	0255	Concrete finishing, floors, manual screed, bull float, machine float & steel trowel (walk-behind)_SOG	1,515.00	sf	2,358	-	-		128	-	1.641 /sf	2,486
n	0122	Control joint, concrete floor slab, sawcut in green concrete, 1" depth_SOG	75.75	lf	71	4	-		7	-	1.075 /lf	81
n	0215	Control joint, clean out control joint of debris_SOG	75.75	lf	12	-	-			-	0.155 /lf	12
n	0367	Control joint, joint sealant, polyurethane, 1/4" x 1/4" (308 LF/Gal)_SOG	151.50	lf	522	42	-		-	-	3.722 /lf	564
n	0310	Concrete surface treatment, curing, sprayed membrane compound_SOG	15.15	csf	258	194	-		-	-	29.836 /csf	452
	1200	Vapor retarders, building paper, polyethylene vapor barrier, standard, 10 mil (.010" thick)	15.15	sq	404	212	-		-	-	40.702 /sq	617
n	1310	Fill, gravel fill, compacted, under floor slabs, alternate pricing method, 12" deep_SOG	65.00	ecy	1,510	3,577	-		126	-	80.204 /ecy	5,213
n	1136	Hauling, excavated borrow material, loose cubic yards, 20 mile round trip, 0.4 loads/hour, 16.5 c.y. dump trailer, highway haulers, excludes loading	65.00	lcy	1,129	-	-		1,266	-	36.849 /lcy	2,395
		03 11 13.504 12" Slab on Grade			*21,172*	*41,654*			*2,420*		*1,144.669/CY*	*65,246*
		57.00 CY										
		172.665 Labor hours 38.659 Equipment hours										
		03 11 13.504.40 (Septage EQU) Foundation Slab, 12" Thick x 1,515 SF			*21,172*	*41,654*	*0*		*2,420*	*0*	*1,144.669/CY*	*65,246*
		57.00 CY										
		172.665 Labor hours 38.659 Equipment hours										
03 11 13.504.45		*(Septage EQU) Elevated Slab, 12" Thick x 1,515 SF*										
03 11 13.504		*12" Slab on Grade*										
	3050	C.I.P. concrete forms, slab on grade, edge, wood, 7" to 12" high, 4 use, includes erecting, bracing, stripping and cleaning	155.692	sfca	1,350	327	-		-	-	10.767 /sfca	1,676
n	9015	C.I.P. concrete forms, bulkhead for slab on grade w/ keyway, up to 12", exp metal, includes erecting, bracing, stripping and cleaning	75.75	sfca	391	59	-		-	-	5.938 /sfca	450
n	2050	Reinforcing steel, unload and sort, add to base_SLAB ON GRADE	4.988	ton	376	-	-		163	-	108.051 /ton	539

Central Kitsap Treatment Plant Solids Handling

Kitsap County

Detail Report with Contractor Markups

	Item	Description	Takeoff Qty		Labor Amount	Material Amount	Subcontract Amount	Subcontract Name	Equipment Amount	Other Amount	Total Unit Cost	Total Amount
03 11 13.504		*12" Slab on Grade*										
	0600	Reinforcing steel, in place, slab on grade, #3 to #7, A615, grade 60, incl labor for accessories, excl material for accessories	4.988	ton	9,379	12,439	-		-	-	4,374.032 /ton	21,818
	2220	Reinforcing steel, crane cost for handling, 90 picks/day, up to 0.5 Ton/day	4.988	ton	1,073	-	-		467	-	308.715 /ton	1,540
	4650	Structural concrete, placing, slab on grade, pumped, over 6" thick, includes leveling (strike off) & consolidation, excludes material	5.70	cy	213	-	-		24	-	41.502 /cy	237
	4650	Structural concrete, placing, slab on grade, pumped, over 6" thick, includes leveling (strike off) & consolidation, excludes material	57.00	cy	2,127	-	-		239	-	41.502 /cy	2,366
n	0725	Struct SLAB ON GRADE concrete,ready mix,normal wt,4500 psi,includes local aggregate,sand,portland cement and water,delivered, includes all additives	5.70	cy	-	2,255	-		-	-	395.553 /cy	2,255
n	0725	Struct SLAB ON GRADE concrete,ready mix,normal wt,4500 psi,includes local aggregate,sand,portland cement and water,delivered, includes all additives	57.00	CY	-	22,546	-		-	-	395.551 /CY	22,546
n	0255	Concrete finishing, floors, manual screed, bull float, machine float & steel trowel (walk-behind)_SOG	1,515.00	sf	2,358	-	-		128	-	1.641 /sf	2,486
n	0122	Control joint, concrete floor slab, sawcut in green concrete, 1" depth_SOG	75.75	lf	71	4	-		7	-	1.075 /lf	81
n	0215	Control joint, clean out control joint of debris_SOG	75.75	lf	12	-	-			-	0.155 /lf	12
n	0367	Control joint, joint sealant, polyurethane, 1/4" x 1/4" (308 LF/Gal)_SOG	151.50	lf	522	42	-		-	-	3.722 /lf	564
n	0310	Concrete surface treatment, curing, sprayed membrane compound_SOG	15.15	csf	258	194	-		-	-	29.836 /csf	452
	1200	Vapor retarders, building paper, polyethylene vapor barrier, standard, 10 mil (.010" thick)	15.15	sq	404	212	-		-	-	40.703 /sq	617
n	1310	Fill, gravel fill, compacted, under floor slabs, alternate pricing method, 12" deep_SOG	65.00	ecy	1,510	3,577	-		126	-	80.204 /ecy	5,213
n	1136	Hauling, excavated borrow material, loose cubic yards, 20 mile round trip, 0.4 loads/hour, 16.5 c.y. dump trailer, highway haulers, excludes loading	65.00	lcy	1,129	-	-		1,266	-	36.849 /lcy	2,395
		03 11 13.504 12" Slab on Grade			*21,172*	*41,654*			*2,420*		*1,144.669/CY*	*65,246*
		57.00 CY										
		172.665 Labor hours 38.659 Equipment hours										
		03 11 13.504.45 (Septage EQU) Elevated Slab, 12" Thick x 1,515 SF			*21,172*	*41,654*	*0*		*2,420*	*0*	*1,144.669/CY*	*65,246*
		57.00 CY										
		172.665 Labor hours 38.659 Equipment hours										

AACE Classification Accuracy Range

Upper Range +50% **Lower Range -30%**

Central Kitsap Treatment Plant Solids Handling

Kitsap County

Detail Report with Contractor Markups

Item		Description	Takeoff Qty		Labor Amount	Material Amount	Subcontract Amount	Subcontract Name	Equipment Amount	Other Amount	Total Unit Cost	Total Amount
		DIVISION 03 CONCRETE			**52,914**	**107,962**	**0**		**5,989**	**0**	**708.015/CY**	**166,865**
		235.68 CY										
		438.111 Labor hours										
		105.454 Equipment hours										
DIVISION 05		**METALS**										
05 50 00.305.05		*SEPTAGE INFLUENT BOX - Metal Grating x 37 SF*										
05 50 00.305		*Metal Grating - Aluminum*										
n	0134	Floor grating, aluminum, 1-1/2" x 3/16" bearing bars @ 1-3/16" O.C., cross bars @ 4" O.C., over 300 S.F., field fabricated from panels	37.00	SF	182	3,061	-		11	-	87.923 /SF	3,253
		05 50 00.305 Metal Grating - Aluminum			*182*	*3,061*			*11*		*87.923/SF*	*3,253*
		37.00 SF										
		1.184 Labor hours										
		0.296 Equipment hours										
		05 50 00.305.05 SEPTAGE INFLUENT BOX - Metal Grating x 37 SF			*182*	*3,061*	*0*		*11*	*0*	*87.923/SF*	*3,253*
		37.00 SF										
		1.184 Labor hours										
		0.296 Equipment hours										
		DIVISION 05 METALS			**182**	**3,061**	**0**		**11**	**0**		**3,253**
		1.184 Labor hours										
		0.296 Equipment hours										
DIVISION 31		**EARTHWORK**										
31.23.10.P005		*Excavation, Backfill, and Haul Off-Site*										
31 23 10.000		*Excavation, Backfill, and Haul Off-Site*										
n	6260	Strt excvt for minor strtr,bank measr,for sprd and mat ftngs,elvtr pits,and small bldng fndtn,sandy clay loam,2 cy bucket,machin excvtn,hydrlc backhoe	185.00	CY	1,720	-	-		1,447	-	17.121 /CY	3,167
	4010	Backfill, structural, sandy clay & loam, 200 H.P. dozer, 50' haul, from existing stockpile, excludes compaction	155.00	CY	97	-	-		170	-	1.726 /CY	268
	4060	Borrow, common earth, 1-1/2 C.Y. bucket, loading and/or spreading, front end loader, wheel-mounted	155.00	CY	245	2,257	-		120	-	16.912 /CY	2,621
n	0560	Hauling,excavated borrow material,loose cubic yards,20 mile round trip,0.4 load/hr,base wide rate,12 cy truck,highway haulers,excludes loading	15.00	CY	378	-	-		391	-	51.278 /CY	769

Central Kitsap Treatment Plant Solids Handling

Kitsap County

Detail Report with Contractor Markups

Item		Description	Takeoff Qty		Labor Amount	Material Amount	Subcontract Amount	Subcontract Name	Equipment Amount	Other Amount	Total Unit Cost	Total Amount
31 23 10.000		*Excavation, Backfill, and Haul Off-Site*										
	0400	Compaction, structural, select fill, 8" lifts, sheepsfoot or wobbly wheel roller	155.00	CY	158	-	-		247	-	2.617 /CY	406
		31 23 10.000 Excavation, Backfill, and Haul Off-Site			*2,598*	*2,257*			*2,377*		*10.874/CY*	*7,231*
		665.00 CY										
		20.702 Labor hours										
		12.543 Equipment hours										
		31.23.10.P005 Excavation, Backfill, and Haul Off-Site			*2,598*	*2,257*	*0*		*2,377*	*0*	*10.874/CY*	*7,231*
		665.00 CY										
		20.702 Labor hours										
		12.543 Equipment hours										
31.23.19.P010		*Well Point Detwatering - 2 Months*										
31 23 19.020		*Dewatering - Wellpoint*										
n	1000	Wellpoints,complete installation,2"wellpoints,5'oc, 200'long header,8"diameter,includes one month operation,equipment rental,fuel and removal system	100.00	hdr	70,169	26,751	-		-	-	969.195 /hdr	96,920
	1100	Wellpoints, each additional month, 2" wellpoints, 5' O.C., 200' long header, 8" diameter, includes operation, equipment rental, and fuel	100.00	hdr	50,180	12,557	-		-	-	627.367 /hdr	62,737
		31 23 19.020 Dewatering - Wellpoint			*120,349*	*39,307*					*79,828.12 /MO*	*159,656*
		2.00 MO										
		914.740 Labor hours										
		31.23.19.P010 Well Point Detwatering - 2 Months			*120,349*	*39,307*	*0*		*0*	*0*	*79,828.12 /MO*	*159,656*
		2.00 MO										
		914.740 Labor hours										
		DIVISION 31 EARTHWORK			**122,947**	**41,564**	**0**		**2,377**	**0**	**250.959/CY**	**166,887**
		665.00 CY										
		935.442 Labor hours										
		12.543 Equipment hours										
		823 SEPTAGE INFLUENT BOX			***176,042***	***152,587***	***0***		***8,376***	***0***	***337,005.53 /LS***	***337,006***
		1.00 LS										
		1,374.737 Labor hours										
		118.293 Equipment hours										

AACE Classification Accuracy Range

Upper Range +50% **Lower Range -30%**

Central Kitsap Treatment Plant Solids Handling

Kitsap County

Detail Report with Contractor Markups

11/17/2023 4:04 PM

Design Stage: Basis of Design Report (15%) - Class 4

Estimate Version: Rev01 / 17-Nov-2023

Estimate Totals

Description	Amount	Totals	Rate
Labor	13,410,841		
Material	25,848,348		
Equipment	2,055,573		
Subcontract	7,264,244		
Other	13,563		
Subtotal Field Const Costs	**48,592,569**	**48,592,569**	
Sales Tax Estimate (Mat & Eq)	1,455,560		9.200 %
Subtotal Field Const Costs	**1,455,560**	**50,048,129**	
Design Contingency	14,484,110		30.000 %
Subtotal Field Const Costs	**14,484,110**	**64,532,239**	
Escalation Project (Year)	7,945,983		12.660 %
Construction Subtotal	**7,945,983**	**72,478,222**	
Market Volatility Adjustment Factor	1,449,564		2.000 %
Construction Total	**1,449,564**	**73,927,786**	
Special Coatings	947,792		1.000 %
Exposed Pipe	6,634,545		7.000 %
Electrical	9,477,921		10.000 %
Controls	3,791,169		4.000 %
Factored Costs	**20,851,427**	**94,779,213**	

AACE Classification Accuracy Range

Upper Range +50% **Lower Range -30%**

Central Kitsap Treatment Plant Solids Handling

Kitsap County

Detail Report - Direct Costs

11/17/2023 4:05 PM

Design Stage: Basis of Design Report (15%) - Class 4

Estimate Version: Rev01 / 17-Nov-2023

Project name	**Kitsap Solids Handling 30_KAJ-01**
Estimator	KAJ, PB, KMJ
Labor rate table	HDR_2023_Union
Equipment rate table	HDR_EQ_2023
Project	Solids Digestion
Report format	Sorted by 'WBS_MAIN/MF04_DIV/Work Activity/HDR04SPEC' 'Detail' summary

AACE Classification Accuracy Range

Upper Range +50% **Lower Range -30%**

Central Kitsap Treatment Plant Solids Handling

Kitsap County

Detail Report - Direct Costs

11/17/2023 4:05 PM

Design Stage: Basis of Design Report (15%) - Class 4

Estimate Version: Rev01 / 17-Nov-2023

Item		Description	Takeoff Qty		Labor Amount	Material Amount	Subcontract Amount	Name	Equipment Amount	Other Amount	Total Unit Cost	Total Amount
		006 SITEWORK										
DIVISION 32		**EXTERIOR IMPROVEMENTS**										
32.12.16.005		*Access Road Around New Maintenance Building*										
32 12 16.000		*Asphalt Vehicular Paving*										
	0100	Aggregate for earthwork, bank run gravel, spread with 200 H.P. dozer, includes load at pit and haul, 2 miles round trip, excludes compaction	719.00	lcy	1,894	19,773	-		3,378	-	34.833 /lcy	25,045
	0012	Fine grading, finish grading, small area, to be paved with grader	2,155.556	sy	4,755	-	-		6,088	-	5.031 /sy	10,844
	5020	Compaction, riding, vibrating roller, 3 passes, 6" lifts	719.00	ecy	217	-	-		192	-	0.569 /ecy	409
	0160	Plant-mix asphalt paving, for highways and large paved areas, binder course, 3" thick, no hauling included	2,155.556	SY	2,008	23,927	-		1,262	-	12.617 /SY	27,197
	0460	Plant-mix asphalt paving, for highways and large paved areas, wearing course, 3" thick, no hauling included	2,155.556	sy	2,232	26,298	-		1,374	-	13.873 /sy	29,904
	0710	Painted pavement markings, thermoplastic, white or yellow, 4" wide, less than 6000 LF	1,000.00	lf	131	920	-		123	-	1.174 /lf	1,174
n	0560	Hauling, asphalt material,loose cubic yards,20 mile round trip,0.4 load/hr,base wide rate,12 cy truck,highway haulers,excludes loading	413.00	lcy	4,698	-	-		6,454	-	27.002 /lcy	11,152
		32 12 16.000 Asphalt Vehicular Paving			*15,935*	*70,917*			*18,873*		*49.047/SY*	*105,724*
		2,155.556 SY										
		291.816 Labor hours										
		186.382 Equipment hours										
		32.12.16.005 Access Road Around New Maintenance Building			*15,935*	*70,917*	*0*		*18,873*	*0*	*49.047/SY*	*105,724*
		2,155.556 SY										
		291.816 Labor hours										
		186.382 Equipment hours										
32.13.13.005		*Concrete Paving - Process Area Allowance*										
32 13 13.000		*Concrete Paving*										
n	1420	Struct PAVING concrete,ready mix,normal wt,4000 psi,includes local aggregate,sand,portland cement and water,delivered, includes all additives	180.00	CY	-	38,700	-		-	-	215.00 /CY	38,700
	0540	Concrete paving surface treatment, reinforcing steel for rigid paving, 18 lbs/SY	800.00	SY	1,861	11,000	-		-	-	16.076 /SY	12,861
	0644	Concrete paving surface treatment, 4500 psi, slip form, unreinforced, 24' pass, 8" thick, includes joints, finishing, and curing	800.00	sy	350	27,200	-		293	-	34.804 /sy	27,843

AACE Classification Accuracy Range

Upper Range +50% **Lower Range -30%**

Central Kitsap Treatment Plant Solids Handling

Kitsap County

Detail Report - Direct Costs

Item		Description	Takeoff Qty		Labor Amount	Material Amount	Subcontract Amount	Name	Equipment Amount	Other Amount	Total Unit Cost	Total Amount
		32 13 13.000 Concrete Paving			*2,211*	*76,900*			*293*		*99.255/SY*	*79,404*
		800.00 SY										
		35.470 Labor hours										
		1.811 Equipment hours										
		32.13.13.005 Concrete Paving - Process Area Allowance			*2,211*	*76,900*	*0*		*293*	*0*	*99.255/SY*	*79,404*
		800.00 SY										
		35.470 Labor hours										
		1.811 Equipment hours										
32.99.00.P005		*Scope Allowance - Exterior Improvements*										
32 99 00.005		*Exterior Improvments - Allowance*										
n	0920	Project Allowance_Landscaping	1.00	LS			25,000				25,000.00 /LS	25,000
n	0925	Project Allowance_Site Improvements	1.00	ls			100,000				100,000.000 /ls	100,000
		32 99 00.005 Exterior Improvments - Allowance					*125,000*				*125,000.00 /LS*	*125,000*
		1.00 LS										
		32.99.00.P005 Scope Allowance - Exterior Improvements			*0*	*0*	*125,000*		*0*	*0*	*125,000.00 /LS*	*125,000*
		1.00 LS										
		DIVISION 32 EXTERIOR IMPROVEMENTS			**18,146**	**147,817**	**125,000**		**19,165**	**0**	**310,128.400/LS**	**310,128**
		1.00 LS										
		327.286 Labor hours										
		188.193 Equipment hours										
		006 SITEWORK			***18,146***	***147,817***	***125,000***		***19,165***	***0***		***310,128***
		327.286 Labor hours										
		188.193 Equipment hours										

007 YARD PIPING

DIVISION 03 CONCRETE

03.11.13.500		*Centrate Flow Control Vault - Base Slab - 14' x 14' x 24" Thick*										
03 11 13.509		*24" Slab on Grade*										
	3050	C.I.P. concrete forms, slab on grade, edge, wood, 7" to 12" high, 4 use, includes erecting, bracing, stripping and cleaning	112.00	sfca	459	137	-		-	-	5.322 /sfca	596
n	9015	C.I.P. concrete forms, bulkhead for slab on grade w/ keyway, up to 12", exp metal, includes erecting, bracing, stripping and cleaning	19.60	sfca	48	9	-		-	-	2.893 /sfca	57

AACE Classification Accuracy Range

Upper Range +50% **Lower Range -30%**

Central Kitsap Treatment Plant Solids Handling

Kitsap County

Detail Report - Direct Costs

11/17/2023 4:05 PM

Design Stage: Basis of Design Report (15%) - Class 4

Estimate Version: Rev01 / 17-Nov-2023

	Item	Description	Takeoff Qty		Labor Amount	Material Amount	Subcontract Amount	Subcontract Name	Equipment Amount	Other Amount	Total Unit Cost	Total Amount
03 11 13.509		*24" Slab on Grade*										
n	2050	Reinforcing steel, unload and sort, add to base_SLAB ON GRADE	1.313	ton	47	-	-		27	-	56.82 /ton	75
	0600	Reinforcing steel, in place, slab on grade, #3 to #7, A615, grade 60, incl labor for accessories, excl material for accessories	1.313	ton	1,179	1,904	-		-	-	2,348.09 /ton	3,083
	2220	Reinforcing steel, crane cost for handling, 90 picks/day, up to 0.5 Ton/day	1.313	ton	135	-	-		78	-	162.330 /ton	213
	4650	Structural concrete, placing, slab on grade, pumped, over 6" thick, includes leveling (strike off) & consolidation, excludes material	1.50	cy	26	-	-		4	-	20.207 /cy	30
	4650	Structural concrete, placing, slab on grade, pumped, over 6" thick, includes leveling (strike off) & consolidation, excludes material	15.00	cy	263	-	-		40	-	20.206 /cy	303
n	0725	Struct SLAB ON GRADE concrete,ready mix,normal wt,4500 psi,includes local aggregate,sand,portland cement and water,delivered, includes all additives	15.00	CY	-	3,450	-		-	-	230.00 /CY	3,450
n	0725	Struct SLAB ON GRADE concrete,ready mix,normal wt,4500 psi,includes local aggregate,sand,portland cement and water,delivered, includes all additives	1.50	cy	-	345	-		-	-	230.00 /cy	345
n	0255	Concrete finishing, floors, manual screed, bull float, machine float & steel trowel (walk-behind)_SOG	196.00	sf	144	-	-		11	-	0.787 /sf	154
n	0122	Control joint, concrete floor slab, sawcut in green concrete, 1" depth_SOG	9.80	lf	4	0	-		1	-	0.529 /lf	5
n	0215	Control joint, clean out control joint of debris_SOG	9.80	lf	1	-	-			-	0.073 /lf	1
n	0367	Control joint, joint sealant, polyurethane, 1/4" x 1/4" (308 LF/Gal)_SOG	19.60	lf	32	3	-		-	-	1.79 /lf	35
n	0310	Concrete surface treatment, curing, sprayed membrane compound_SOG	1.96	csf	16	15	-		-	-	15.41 /csf	30
	1200	Vapor retarders, building paper, polyethylene vapor barrier, standard, 10 mil (.010" thick)	1.96	sq	25	16	-		-	-	20.816 /sq	41
n	1310	Fill, gravel fill, compacted, under floor slabs, alternate pricing method, 12" deep_SOG	8.00	ecy	87	256	-		10	-	44.144 /ecy	353
n	1136	Hauling, excavated borrow material, loose cubic yards, 20 mile round trip, 0.4 loads/hour, 16.5 c.y. dump trailer, highway haulers, excludes loading	8.00	lcy	66	-	-		99	-	20.626 /lcy	165
		03 11 13.509 24" Slab on Grade			*2,532*	*6,134*			*270*		*595.761/CY*	*8,936*
		15.00 CY										
		43.009 Labor hours										
		6.160 Equipment hours										
		03.11.13.500 Centrate Flow Control Vault - Base Slab - 14' x 14' x 24" Thick			*2,532*	*6,134*	*0*		*270*	*0*	*595.761/CY*	*8,936*
		15.00 CY										
		43.009 Labor hours										
		6.160 Equipment hours										

AACE Classification Accuracy Range

Upper Range +50% **Lower Range -30%**

Central Kitsap Treatment Plant Solids Handling

Kitsap County

Detail Report - Direct Costs

	Item	Description	Takeoff Qty		Labor Amount	Material Amount	Subcontract Amount	Subcontract Name	Equipment Amount	Other Amount	Total Unit Cost	Total Amount
03.11.13.505		*Centrate Flow Control Vault - Walls - 40' LF x 10' High x 18" Thick*										
03 11 13.509		*24" Slab on Grade*										
	0500	C.I.P. concrete forms, wall, wood bulkhead with 2 piece keyway, 1 use, includes erecting, bracing, stripping and cleaning	20.00	lf	208	68	-		-	-	13.793 /lf	276
	2550	C.I.P. concrete forms, wall, job built, plywood, over 8' to 16' high, 4 use, includes erecting, bracing, stripping and cleaning	800.00	sfca	5,578	792	-		-	-	7.962 /sfca	6,370
	5200	Chamfer strip, wood, 3/4" wide	40.00	lf	36	6	-		-	-	1.033 /lf	41
	1400	Tie cones, plastic, for coil tie system, for CIP wall forms, 1/2" bolt diameter x 1" setback length, includes material only	1.00	c	-	65	-		-	-	65.00 /c	65
n	3010	Waterstop, rubber, center bulb, 1/4" thick x 6" wide_WALLS	60.00	lf	194	450	-		-	-	10.733 /lf	644
	0100	Splice rebar, standard, self-aligning type, taper threaded, #4 bars, includes holding rebar in place while splicing	25.30	ea	217	324	-		-	-	21.373 /ea	541
n	2020	Reinforcing steel, unload and sort, add to base_WALLS	2.30	ton	83	-	-		48	-	56.817 /ton	131
n	2214	Reinforcing steel, crane cost for handling, average, add_WALLS	2.30	ton	90	-	-		52	-	61.757 /ton	142
	0700	Reinforcing steel, in place, walls, #3 to #7, A615, grade 60, incl labor for accessories, excl material for accessories	2.30	ton	1,584	3,335	-		-	-	2,138.535 /ton	4,919
	5100	Structural concrete, placing, walls, pumped, 12" thick, includes leveling (strike off) & consolidation, excludes material	2.30	cy	68	-	-		10	-	33.983 /cy	78
	5100	Structural concrete, placing, walls, pumped, 12" thick, includes leveling (strike off) & consolidation, excludes material	23.00	cy	678	-	-		103	-	33.983 /cy	782
n	0525	Struct WALLS concrete,ready mix,normal wt,4500 psi,includes local aggregate,sand,portland cement and water,delivered, includes all additives	2.30	cy	-	529	-		-	-	230.00 /cy	529
n	0525	Struct WALLS concrete,ready mix,normal wt,4500 psi,includes local aggregate,sand,portland cement and water,delivered, includes all additives	23.00	CY	-	5,290	-		-	-	230.00 /CY	5,290
n	0210	Control joint, clean out control joint of debris_WALLS	20.00	lf	1	-	-			-	0.073 /lf	1
n	0366	Control joint, joint sealant, polyurethane, 1/4" x 1/4" (308 LF/Gal)_WALLS	20.00	lf	33	3	-		-	-	1.790 /lf	36
	0020	Concrete finishing, walls, includes breaking ties and patching voids	800.00	sf	652	32	-		-	-	0.855 /sf	684
	0050	Concrete finishing, walls, burlap rub with grout, includes breaking ties and patching voids	400.00	sf	391	16	-		-	-	1.018 /sf	407
		03 11 13.509 24" Slab on Grade			*9,812*	*10,910*			*214*		*910.214/CY*	*20,935*

23.00 CY

170.542 Labor hours
5.904 Equipment hours

AACE Classification Accuracy Range

Upper Range +50% **Lower Range -30%**

Central Kitsap Treatment Plant Solids Handling

Kitsap County

Detail Report - Direct Costs

Item		Description	Takeoff Qty		Labor Amount	Material Amount	Subcontract Amount	Name	Equipment Amount	Other Amount	Total Unit Cost	Total Amount
		03.11.13.505 Centrate Flow Control Vault - Walls - 40' LF x 10' High x 18" Thick			*9,812*	*10,910*	*0*		*214*	*0*	*910.214/CY*	*20,935*
		23.00 CY										
		170.542 Labor hours										
		5.904 Equipment hours										
03.11.13.510		*Centrate Flow Control Vault - Walls - 10' x 12' x 12" Thick*										
03 11 13.303		*12" Elevated Slab*										
	6600	Scaffolding, steel tubular, heavy duty shoring for elevated slab forms, floor area, labor only to erect & dismantle, to 14'-8" high	1.00	csf	188	-	-		-	-	187.52 /csf	188
	6600	Scaffolding, steel tubular, heavy duty shoring for elevated slab forms, floor area, labor only to erect & dismantle, to 14'-8" high	1.00	csf	188	-	-		-	-	187.52 /csf	188
	6610	Scaffolding, steel tubular, heavy duty shoring for elevated slab forms, floor area, rent/month of materials only, to 14'-8" high	3.00	csf	-	194	-		-	-	64.50 /csf	194
	6610	Scaffolding, steel tubular, heavy duty shoring for elevated slab forms, floor area, rent/month of materials only, to 14'-8" high	3.00	csf	-	194	-		-	-	64.50 /csf	194
	2150	C.I.P. concrete forms, elevated slab, flat slab with drop panels, to 15' high, 4 use, includes shoring, erecting, bracing, stripping and cleaning	100.00	sf	506	220	-		-	-	7.263 /sf	726
	7000	C.I.P. concrete forms, elevated slab, edge forms, to 6" high, 4 use, includes shoring, erecting, bracing, stripping and cleaning	83.00	lf	296	26	-		-	-	3.879 /lf	322
n	2040	Reinforcing steel, unload and sort, add to base_ELEVATE SLABS	0.45	ton	16	-	-		9	-	56.82 /ton	26
n	2218	Reinforcing steel, crane cost for handling, average, add_ELEVATED SLABS	0.45	ton	18	-	-		10	-	61.76 /ton	28
	0400	Reinforcing steel, in place, elevated slabs, #4 to #7, A615, grade 60, incl labor for accessories, excl material for accessories	0.45	ton	321	653	-		-	-	2,162.27 /ton	973
	1500	Structural concrete, placing, elevated slab, pumped, 6" to 10" thick, includes leveling (strike off) & consolidation, excludes material	4.00	cy	81	-	-		12	-	23.363 /cy	93
	1500	Structural concrete, placing, elevated slab, pumped, 6" to 10" thick, includes leveling (strike off) & consolidation, excludes material	0.40	cy	8	-	-		1	-	23.35 /cy	9
n	0825	Struct ELEV SLAB concrete,ready mix,normal wt,4500 psi,includes local aggregate,sand,portland cement and water,delivered, includes all additives	0.40	cy	-	92	-		-	-	230.00 /cy	92
n	0825	Struct ELEV SLAB concrete,ready mix,normal wt,4500 psi,includes local aggregate,sand,portland cement and water,delivered, includes all additives	4.00	CY	-	920	-		-	-	230.00 /CY	920
n	0256	Concrete finishing, floors, manual screed, bull float, machine float & steel trowel (walk-behind)_ELEV SLAB	100.00	sf	73	-	-		5	-	0.787 /sf	79

AACE Classification Accuracy Range

Upper Range +50% **Lower Range -30%**

Central Kitsap Treatment Plant Solids Handling

Kitsap County

Detail Report - Direct Costs

Item		Description	Takeoff Qty		Labor Amount	Material Amount	Subcontract Amount	Name	Equipment Amount	Other Amount	Total Unit Cost	Total Amount
03 11 13.303		*12" Elevated Slab*										
n	9000	Concrete finishing, elev slabs, includes patching voids	100.00	sf	81	3	-		-	-	0.845 /sf	84
		03 11 13.303 12" Elevated Slab			*1,776*	*2,300*			*39*		*1,028.645/CY*	*4,115*
		4.00 CY										
		30.667 Labor hours										
		1.201 Equipment hours										
		03.11.13.510 Centrate Flow Control Vault - Walls - 10' x 12' x 12" Thick			*1,776*	*2,300*	*0*		*39*	*0*	*1,028.645/CY*	*4,115*
		4.00 CY										
		30.667 Labor hours										
		1.201 Equipment hours										
		DIVISION 03 CONCRETE			**14,120**	**19,344**	**0**		**522**	**0**	**809.188/CY**	**33,986**
		42.00 CY										
		244.218 Labor hours										
		13.265 Equipment hours										
DIVISION 05		**METALS**										
05.50.00.005		*Centrate Flow Control Vault - Aluminum Ladder - 10' High*										
05 50 00.450		*Metal Ladders - Aluminum*										
	0400	Ladder, shop fabricated, aluminum, 20" W, bolted to concrete, excl cage	10.00	LF	246	535	-		18	-	79.989 /LF	800
		05 50 00.450 Metal Ladders - Aluminum			*246*	*535*			*18*		*79.989/LF*	*800*
		10.00 LF										
		3.765 Labor hours										
		0.941 Equipment hours										
		05.50.00.005 Centrate Flow Control Vault - Aluminum Ladder - 10' High			*246*	*535*	*0*		*18*	*0*	*79.989/LF*	*800*
		10.00 LF										
		3.765 Labor hours										
		0.941 Equipment hours										
		DIVISION 05 METALS			**246**	**535**	**0**		**18**	**0**		**800**
		3.765 Labor hours										
		0.941 Equipment hours										
DIVISION 08		**OPENINGS**										

Central Kitsap Treatment Plant Solids Handling

Kitsap County

Detail Report - Direct Costs

Item		Description	Takeoff Qty		Labor Amount	Material Amount	Subcontract Amount	Subcontract Name	Equipment Amount	Other Amount	Total Unit Cost	Total Amount
08.31.00.005		*Centrate Flow Control Vault - Double Leaf Access Door - 4' x 4'*										
08 31 00.030		*Access Door - Double Leaf - 4' x 4'*										
	0300	Doors, specialty, access, floor, industrial, steel, 300 psf L.L., double leaf, 4' x 4', 455 lb	1.00	EA	1,033	3,525	-		-	-	4,557.80 /EA	4,558
		08 31 00.030 Access Door - Double Leaf - 4' x 4'			*1,033*	*3,525*					*4,557.80 /EA*	*4,558*
		1.00 EA										
		16.00 Labor hours										
		08.31.00.005 Centrate Flow Control Vault - Double Leaf Access Door - 4' x 4'			*1,033*	*3,525*	*0*		*0*	*0*	*4,557.80 /EA*	*4,558*
		1.00 EA										
		16.00 Labor hours										
		DIVISION 08 OPENINGS			**1,033**	**3,525**	**0**		**0**	**0**	**4,557.80 /EA**	**4,558**
		1.00 EA										
		16.00 Labor hours										
DIVISION 33		**UTILITIES (BURIED PIPE AND VALVES)**										
33.05.16.005		*Septage Bypass - Precast Manhole - 60" Dia - 10' Deep*										
33 05 16.060		*Precast Concrete Manhole Structure, 60" (05')*										
	4650	Structural concrete, placing, slab on grade, pumped, over 6" thick, includes leveling (strike off) & consolidation, excludes material	2.00	cy	35	-	-		5	-	20.205 /cy	40
n	0725	Struct SLAB ON GRADE concrete,ready mix,normal wt,4500 psi,includes local aggregate,sand,portland cement and water,delivered, includes all additives	2.00	CY	-	460	-		-	-	230.00 /CY	460
n	1310	Fill, gravel fill, compacted, under floor slabs, alternate pricing method, 12" deep_SOG	4.00	ecy	44	128	-		5	-	44.143 /ecy	177
n	1135	Hauling, excavated borrow material, loose cubic yards, 20 mile round trip, 0.4 loads/hour, 16.5 c.y. dump trailer, highway haulers, excludes loading	3.00	lcy	25	-	-		37	-	20.623 /lcy	62
	2700	Utility area drain, catch basins or manholes frames and covers, cast iron, watertight, 32" diameter, 575 lb., excluding footing & excavation	1.00	ea	206	950	-		38	-	1,193.50 /ea	1,194
	1170	Storm drainage manholes, frames and covers, concrete, precast, 5' I.D., 8' deep, excludes footing, excavation, backfill, frame and cover	1.00	ea	822	3,075	-		152	-	4,049.00 /ea	4,049
n	1180	Storm drainage manholes,frames and covers,concrete,precast,5'id, excludes footing,excavation,backfill,frame and cover,add for depths over 8'	2.00	vlf	206	1,050	-		38	-	646.75 /vlf	1,294

AACE Classification Accuracy Range

Upper Range +50% **Lower Range -30%**

Central Kitsap Treatment Plant Solids Handling

Kitsap County

Detail Report - Direct Costs

	Item	Description	Takeoff Qty		Labor Amount	Material Amount	Subcontract Amount	Name	Equipment Amount	Other Amount	Total Unit Cost	Total Amount
33 05 16.060		*Precast Concrete Manhole Structure, 60" (05')*										
	1400	Storm drainage manholes, frames and covers, precast concrete, 5' diameter manhole, 8" thick top	1.00	EA	164	325	-		30	-	519.800 /EA	520
	4000	Storm drainage manholes, frames and covers, steps, standard sizes, galvanized steel	10.00	ea	115	250	-		-	-	36.50 /ea	365
	9000	Storm Drainage Manholes, Frames, and Covers, Rubber Boot for Connection to Pipe	6.00	dia"	-	26	-		-	-	4.25 /dia"	26
		33 05 16.060 Precast Concrete Manhole Structure, 60" (05')			*1,616*	*6,264*			*305*		*8,185.15 /EA*	*8,185*
		1.00 EA										
		31.209 Labor hours										
		10.360 Equipment hours										
		33.05.16.005 Septage Bypass - Precast Manhole - 60" Dia - 10' Deep			*1,616*	*6,264*	*0*		*305*	*0*	*8,185.15 /EA*	*8,185*
		1.00 EA										
		31.209 Labor hours										
		10.360 Equipment hours										
33.05.17.005		*Potable Water - W1 - Copper - 2" Dia - Allowance*										
33 05 17.002		*Buried Pipe, Copper, 02" Dia and Smaller*										
	10000	Total Trench Excavation - (Informational only - NO COST)	3,125.00	cy		-	-			-		
n	7001	Pipeline Testing, Hydro (LF)	2,000.00	lf	4,936	150	-		448	-	2.767 /lf	5,534
	7380	Insulation, pipe covering (price copper tube one size less than I.P.S.), fiberglass with all service jacket, 2" wall, 2" iron pipe size	2,000.00	lf	10,711	10,700	-		-	-	10.706 /lf	21,411
n	0400	Pipe insultn,protctv jacketng,aluminum,metal roll,aluminum with polykrft moisture barrier,smooth,.016"thk,6"id,cut from roll goods,size based insulatn	2,000.00	lf	14,281	5,280	-		-	-	9.781 /lf	19,561
	1280	Pipe insulation, protective jacketing, aluminum, fitting covers, 90> LR elbow, 2 piece, 6", size based on OD of insulation	50.00	ea	524	643	-		-	-	23.328 /ea	1,166
	2140	Pipe insulation, protective jacketing, aluminum, fitting covers, 45> elbow, 2 piece, 6", size based on OD of insulation	50.00	ea	524	500	-		-	-	20.478 /ea	1,024
	3130	Pipe insulation, protective jacketing, aluminum, fitting covers, tee, 4 piece, 6", size based on OD of insulation	10.00	ea	151	465	-		-	-	61.563 /ea	616
	1260	Pipe, copper, tubing, solder, 2" diameter, type K, includes coupling & clevis hanger assembly 10' O.C.	2,000.00	LF	28,820	79,000	-		-	-	53.91 /LF	107,820
	0160	Elbow, 90 Deg., copper, wrought, copper x copper, 2"	50.00	ea	2,620	2,950	-		-	-	111.40 /ea	5,570
	0340	Elbow, 45 Deg., copper, wrought, copper x copper, 2"	50.00	ea	2,620	2,725	-		-	-	106.90 /ea	5,345
	0540	Tee, copper, wrought, copper x copper, 2"	10.00	ea	823	1,040	-		-	-	186.343 /ea	1,863
n	09010	Trench, Backfill, and Compaction w/ Crew 2	6.00	days	16,084	-	-		12,775	-	4,809.737 /days	28,858

AACE Classification Accuracy Range

Upper Range +50% **Lower Range -30%**

Central Kitsap Treatment Plant Solids Handling

Kitsap County

Detail Report - Direct Costs

	Item	Description	Takeoff Qty		Labor Amount	Material Amount	Subcontract Amount	Subcontract Name	Equipment Amount	Other Amount	Total Unit Cost	Total Amount
33 05 17.002		*Buried Pipe, Copper, 02" Dia and Smaller*										
	0050	Fill by borrow and utility bedding, for pipe and conduit, crushed or screened bank run gravel, excludes compaction	817.00	lcy	6,719	25,327	-		1,239	-	40.74 /lcy	33,285
n	0560	Hauling,excavated borrow material,loose cubic yards,20 mile round trip,0.4 load/hr,base wide rate,12 cy truck,highway haulers,excludes loading	940.00	lcy	10,692	-	-		14,690	-	27.002 /lcy	25,382
	00500	6" Wide Underground Utility Marking Tape	20.00	clf	54	760	-		-	-	40.70 /clf	814
		33 05 17.002 Buried Pipe, Copper, 02" Dia and Smaller			*99,559*	*129,540*			*29,151*		*129.125/LF*	*258,250*
		2,000.00 LF										
		1,635.547 Labor hours										
		556.396 Equipment hours										
		33.05.17.005 Potable Water - W1 - Copper - 2" Dia - Allowance			*99,559*	*129,540*	*0*		*29,151*	*0*	*129.125/LF*	*258,250*
		2,000.00 LF										
		1,635.547 Labor hours										
		556.396 Equipment hours										
33.05.18.005		*Natural Gas Pipe - Steel - 3" Dia - Allowance*										
33 05 18.003		*Buried Pipe, Gas Pipe, 03" Dia*										
	10000	Total Trench Excavation - (Informational only - NO COST)	3,213.00	cy		-	-			-		
n	7001	Pipeline Testing, Hydro (LF)	2,000.00	lf	4,936	150	-		448	-	2.767 /lf	5,534
	7400	Insulation, pipe covering (price copper tube one size less than I.P.S.), fiberglass with all service jacket, 2" wall, 3" iron pipe size	2,000.00	lf	12,050	17,000	-		-	-	14.525 /lf	29,050
n	0430	Pipe insultn,protctv jacketng,aluminum,metal roll,aluminum with polykrft moisture barrier,smooth,.016"thk,7"id,cut from roll goods,size based insulatn	2,000.00	lf	15,063	5,960	-		-	-	10.511 /lf	21,023
	1310	Pipe insulation, protective jacketing, aluminum, fitting covers, 90> LR elbow, 2 piece, 7", size based on OD of insulation	50.00	ea	567	940	-		-	-	30.141 /ea	1,507
	2160	Pipe insulation, protective jacketing, aluminum, fitting covers, 45> elbow, 2 piece, 7", size based on OD of insulation	50.00	ea	567	690	-		-	-	25.141 /ea	1,257
	3150	Pipe insulation, protective jacketing, aluminum, fitting covers, tee, 4 piece, 7", size based on OD of insulation	10.00	ea	166	510	-		-	-	67.621 /ea	676
	2090	Pipe, steel, black, welded, 3" diameter, schedule 40, Spec. A-53, includes yoke & roll hanger assembly, sized for covering, 10' OC	2,000.00	LF	49,060	32,300	-		5,265	-	43.313 /LF	86,625
	9300	Pipe, steel, Welding labor per joint, 3" pipe size, schedule 40, welding	200.00	ea	17,580	-	-		1,887	-	97.333 /ea	19,467
	3120	Elbow, 90 Deg., steel, carbon steel, black, long radius, butt weld, standard weight, 3" pipe size, includes 1 weld per joint and weld machine	50.00	ea	7,534	1,650	-		809	-	199.856 /ea	9,993

Central Kitsap Treatment Plant Solids Handling

Kitsap County

Detail Report - Direct Costs

	Item	Description	Takeoff Qty		Labor Amount	Material Amount	Subcontract Amount	Name	Equipment Amount	Other Amount	Total Unit Cost	Total Amount
33 05 18.003		*Buried Pipe, Gas Pipe, 03" Dia*										
	3280	Elbow, 45 Deg., steel, carbon steel, black, long radius, butt weld, standard weight, 3" pipe size, includes 1 weld per joint and weld machine	50.00	ea	7,534	1,150	-		809	-	189.856 /ea	9,493
	3430	Tee, steel, carbon steel, black, straight, butt weld, standard weight, 3" pipe size, includes 1 weld per joint and weld machine	10.00	ea	2,637	1,580	-		283	-	449.998 /ea	4,500
n	09010	Trench, Backfill, and Compaction w/ Crew 2	6.00	days	16,084	-	-		12,775	-	4,809.737 /days	28,858
	0050	Fill by borrow and utility bedding, for pipe and conduit, crushed or screened bank run gravel, excludes compaction	864.00	lcy	7,106	26,784	-		1,310	-	40.74 /lcy	35,199
n	0560	Hauling,excavated borrow material,loose cubic yards,20 mile round trip,0.4 load/hr,base wide rate,12 cy truck,highway haulers,excludes loading	994.00	lcy	11,306	-	-		15,534	-	27.002 /lcy	26,840
	00500	6" Wide Underground Utility Marking Tape	20.00	clf	54	760	-		-	-	40.70 /clf	814
		33 05 18.003 Buried Pipe, Gas Pipe, 03" Dia			*152,244*	*89,474*			*39,118*		*140.418/LF*	*280,836*
		2,000.00 LF										
		2,486.288 Labor hours										
		1,209.691 Equipment hours										
		33.05.18.005 Natural Gas Pipe - Steel - 3" Dia - Allowance			*152,244*	*89,474*	*0*		*39,118*	*0*	*140.418/LF*	*280,836*
		2,000.00 LF										
		2,486.288 Labor hours										
		1,209.691 Equipment hours										
33.05.19.005		*D Drain Pipe - Ductile Iron - 04" Dia*										
33 05 19.004		*Buried Pipe, Ductile Iron, 04" Dia*										
n	7040	Rent trench box, 7200 lbs, 6' x 20'	1.00	day	-	-	-		123	-	123.46 /day	123
	10000	Total Trench Excavation - (Informational only - NO COST)	33.00	cy		-	-			-		
n	7001	Pipeline Testing, Hydro (LF)	20.00	lf	49	2	-		4	-	2.767 /lf	55
n	09010	Trench, Backfill, and Compaction w/ Crew 2	1.00	days	2,681	-	-		2,129	-	4,809.74 /days	4,810
	0050	Fill by borrow and utility bedding, for pipe and conduit, crushed or screened bank run gravel, excludes compaction	9.00	lcy	74	279	-		14	-	40.74 /lcy	367
n	0560	Hauling,excavated borrow material,loose cubic yards,20 mile round trip,0.4 load/hr,base wide rate,12 cy truck,highway haulers,excludes loading	11.00	lcy	125	-	-		172	-	27.003 /lcy	297
	00500	6" Wide Underground Utility Marking Tape	1.00	clf	3	38	-		-	-	40.70 /clf	41
n	2020	Distribution piping,DIP,cement lined,fastite,20' lengths, 04"dia, Press Class 350, Excludes excavation, backfill, bedding	20.00	LF	132	542	-		85	-	37.943 /LF	759
n	4100	Distribution Piping,DIP,Flex-Ring Joint, 04"dia,additional per linear foot of restrained pipe	20.00	lf		160	-			-	8.00 /lf	160
	8200	Fitting, 45 degree bend,DIP,cement lined,MJ,4"dia,C110 water piping	2.00	ea	88	176	-		4	-	134.06 /ea	268
n	4701	DIP,Polywrap 8 mil LDT 500ft,4"dia	1.00	roll	56	240	-		-	-	295.52 /roll	296

Central Kitsap Treatment Plant Solids Handling

Kitsap County

Detail Report - Direct Costs

	Item	Description	Takeoff Qty		Labor Amount	Material Amount	Subcontract Amount	Subcontract Name	Equipment Amount	Other Amount	Total Unit Cost	Total Amount
		33 05 19.004 Buried Pipe, Ductile Iron, 04" Dia			*3,207*	*1,437*			*2,531*		*358.771/LF*	*7,175*
		20.00 LF										
		61.554 Labor hours										
		59.896 Equipment hours										
		33.05.19.005 D Drain Pipe - Ductile Iron - 04" Dia			*3,207*	*1,437*	*0*		*2,531*	*0*	*358.771/LF*	*7,175*
		20.00 LF										
		61.554 Labor hours										
		59.896 Equipment hours										
33.05.19.010		*D Drain Pipe - Ductile Iron - 06" Dia*										
33 05 19.006		*Buried Pipe, Ductile Iron, 06" Dia*										
n	7040	Rent trench box, 7200 lbs, 6' x 20'	1.00	day	-	-	-		123	-	123.46 /day	123
	10000	Total Trench Excavation - (Informational only - NO COST)	235.00	cy		-	-			-		
n	7001	Pipeline Testing, Hydro (LF)	135.00	lf	333	10	-		30	-	2.767 /lf	374
n	09010	Trench, Backfill, and Compaction w/ Crew 2	1.00	days	2,681	-	-		2,129	-	4,809.74 /days	4,810
	0050	Fill by borrow and utility bedding, for pipe and conduit, crushed or screened bank run gravel, excludes compaction	68.00	lcy	559	2,108	-		103	-	40.74 /lcy	2,770
n	0560	Hauling,excavated borrow material,loose cubic yards,20 mile round trip,0.4 load/hr,base wide rate,12 cy truck,highway haulers,excludes loading	79.00	lcy	899	-	-		1,235	-	27.002 /lcy	2,133
	00500	6" Wide Underground Utility Marking Tape	2.00	clf	5	76	-		-	-	40.70 /clf	81
n	2040	Distribution piping,DIP,cement lined,fastite,20' lengths, 06"dia, Press Class 350, Excludes excavation, backfill, bedding	135.00	LF	989	3,066	-		635	-	34.735 /LF	4,689
n	4101	Distribution Piping,DIP,Flex-Ring Joint, 06"dia,additional per linear foot of restrained pipe	135.00	lf		1,080	-			-	8.00 /lf	1,080
	8205	Fitting, 45 degree bend,DIP,cement lined,MJ,6"dia,C110 water piping	3.00	ea	288	518	-		10	-	272.107 /ea	816
n	4702	DIP,Polywrap 8 mil LDT 500ft,6"dia	1.00	roll	56	418	-		-	-	473.70 /roll	474
		33 05 19.006 Buried Pipe, Ductile Iron, 06" Dia			*5,810*	*7,277*			*4,265*		*128.525/LF*	*17,351*
		135.00 LF										
		108.850 Labor hours										
		84.082 Equipment hours										
		33.05.19.010 D Drain Pipe - Ductile Iron - 06" Dia			*5,810*	*7,277*	*0*		*4,265*	*0*	*128.525/LF*	*17,351*
		135.00 LF										
		108.850 Labor hours										
		84.082 Equipment hours										
33.05.19.015		*D Drain Pipe - Ductile Iron - 08" Dia*										
33 05 19.008		*Buried Pipe, Ductile Iron, 08" Dia*										
n	7040	Rent trench box, 7200 lbs, 6' x 20'	1.00	day	-	-	-		123	-	123.46 /day	123

Central Kitsap Treatment Plant Solids Handling

Kitsap County

Detail Report - Direct Costs

	Item	Description	Takeoff Qty		Labor Amount	Material Amount	Subcontract Amount	Subcontract Name	Equipment Amount	Other Amount	Total Unit Cost	Total Amount
33 05 19.008		*Buried Pipe, Ductile Iron, 08" Dia*										
	10000	Total Trench Excavation - (Informational only - NO COST)	83.00	cy		-	-			-		
n	7001	Pipeline Testing, Hydro (LF)	45.00	lf	111	3	-		10	-	2.767 /lf	125
n	09010	Trench, Backfill, and Compaction w/ Crew 2	1.00	days	2,681	-	-		2,129	-	4,809.74 /days	4,810
	0050	Fill by borrow and utility bedding, for pipe and conduit, crushed or screened bank run gravel, excludes compaction	25.00	lcy	206	775	-		38	-	40.74 /lcy	1,019
n	0560	Hauling,excavated borrow material,loose cubic yards,20 mile round trip,0.4 load/hr,base wide rate,12 cy truck,highway haulers,excludes loading	30.00	lcy	341	-	-		469	-	27.002 /lcy	810
	00500	6" Wide Underground Utility Marking Tape	1.00	clf	3	38	-		-	-	40.70 /clf	41
n	2060	Distribution piping,DIP,cement lined,fastite,20' lengths, 08"dia, Press Class 350, Excludes excavation, backfill, bedding	45.00	LF	330	1,353	-		212	-	42.085 /LF	1,894
n	4102	Distribution Piping,DIP,Flex-Ring Joint, 08"dia,additional per linear foot of restrained pipe	45.00	lf		480	-			-	10.66 /lf	480
n	8010	Fitting, 90 degree bend,DIP,cement lined,MJ, 08"dia,C110 water piping	1.00	ea	148	491	-		4	-	643.75 /ea	644
	8210	Fitting, 45 degree bend,DIP,cement lined,MJ,8"dia,C110 water piping	2.00	ea	297	499	-		8	-	402.15 /ea	804
n	4703	DIP,Polywrap 8 mil LDT 500ft,8"dia	1.00	roll	56	523	-		-	-	578.24 /roll	578
		33 05 19.008 Buried Pipe, Ductile Iron, 08" Dia			*4,171*	*4,162*			*2,994*		*251.706/LF*	*11,327*
		45.00 LF										
		79.111 Labor hours										
		66.327 Equipment hours										
		33.05.19.015 D Drain Pipe - Ductile Iron - 08" Dia			*4,171*	*4,162*	*0*		*2,994*	*0*	*251.706/LF*	*11,327*
		45.00 LF										
		79.111 Labor hours										
		66.327 Equipment hours										
33.05.19.025		*FOG - Fat, Oil and Grease - Ductile Iron - 04" Dia*										
33 05 19.004		*Buried Pipe, Ductile Iron, 04" Dia*										
n	7040	Rent trench box, 7200 lbs, 6' x 20'	10.00	day	-	-	-		1,235	-	123.46 /day	1,235
	10000	Total Trench Excavation - (Informational only - NO COST)	2,336.00	cy		-	-			-		
n	7001	Pipeline Testing, Hydro (LF)	1,415.00	lf	3,492	106	-		317	-	2.767 /lf	3,915
n	09010	Trench, Backfill, and Compaction w/ Crew 2	10.00	days	26,806	-	-		21,291	-	4,809.736 /days	48,097
	0050	Fill by borrow and utility bedding, for pipe and conduit, crushed or screened bank run gravel, excludes compaction	645.00	lcy	5,304	19,995	-		978	-	40.74 /lcy	26,277
n	0560	Hauling,excavated borrow material,loose cubic yards,20 mile round trip,0.4 load/hr,base wide rate,12 cy truck,highway haulers,excludes loading	742.00	lcy	8,440	-	-		11,596	-	27.002 /lcy	20,036
	00500	6" Wide Underground Utility Marking Tape	15.00	clf	41	570	-		-	-	40.70 /clf	611

AACE Classification Accuracy Range

Upper Range +50% **Lower Range -30%**

Central Kitsap Treatment Plant Solids Handling

Kitsap County

Detail Report - Direct Costs

	Item	Description	Takeoff Qty		Labor Amount	Material Amount	Subcontract Amount	Subcontract Name	Equipment Amount	Other Amount	Total Unit Cost	Total Amount
33 05 19.004		*Buried Pipe, Ductile Iron, 04" Dia*										
n	2020	Distribution piping,DIP,cement lined,fastite,20' lengths, 04"dia, Press Class 350, Excludes excavation, backfill, bedding	1,415.00	LF	9,328	38,375	-		5,986	-	37.942 /LF	53,689
n	4100	Distribution Piping,DIP,Flex-Ring Joint, 04"dia,additional per linear foot of restrained pipe	750.00	lf		6,000	-			-	8.00 /lf	6,000
n	8000	Fitting, 90 degree bend,DIP,cement lined,MJ, 04"dia,C110 water piping	2.00	ea	88	389	-		4	-	240.46 /ea	481
	8200	Fitting, 45 degree bend,DIP,cement lined,MJ,4"dia,C110 water piping	4.00	ea	176	352	-		8	-	134.063 /ea	536
n	4701	DIP,Polywrap 8 mil LDT 500ft,4"dia	3.00	roll	167	720	-		-	-	295.52 /roll	887
		33 05 19.004 Buried Pipe, Ductile Iron, 04" Dia			*53,841*	*66,507*			*41,415*		*114.320/LF*	*161,763*
		1,415.00 LF										
		1,010.464 Labor hours										
		825.966 Equipment hours										
		33.05.19.025 FOG - Fat, Oil and Grease - Ductile Iron - 04" Dia			*53,841*	*66,507*	*0*		*41,415*	*0*	*114.320/LF*	*161,763*
		1,415.00 LF										
		1,010.464 Labor hours										
		825.966 Equipment hours										
33.05.19.030		*Primary Sludge - Ductile Iron - 06" Dia*										
33 05 19.006		*Buried Pipe, Ductile Iron, 06" Dia*										
n	7040	Rent trench box, 7200 lbs, 6' x 20'	8.00	day	-	-	-		988	-	123.46 /day	988
	10000	Total Trench Excavation - (Informational only - NO COST)	1,959.00	cy		-	-			-		
n	7001	Pipeline Testing, Hydro (LF)	1,125.00	lf	2,777	84	-		252	-	2.767 /lf	3,113
n	09010	Trench, Backfill, and Compaction w/ Crew 2	8.00	days	21,445	-	-		17,033	-	4,809.736 /days	38,478
	0050	Fill by borrow and utility bedding, for pipe and conduit, crushed or screened bank run gravel, excludes compaction	567.00	lcy	4,663	17,577	-		860	-	40.74 /lcy	23,100
n	0560	Hauling,excavated borrow material,loose cubic yards,20 mile round trip,0.4 load/hr,base wide rate,12 cy truck,highway haulers,excludes loading	653.00	lcy	7,428	-	-		10,205	-	27.002 /lcy	17,632
	00500	6" Wide Underground Utility Marking Tape	12.00	clf	32	456	-		-	-	40.70 /clf	488
n	2040	Distribution piping,DIP,cement lined,fastite,20' lengths, 06"dia, Press Class 350, Excludes excavation, backfill, bedding	1,125.00	LF	8,240	25,549	-		5,288	-	34.735 /LF	39,077
n	4101	Distribution Piping,DIP,Flex-Ring Joint, 06"dia,additional per linear foot of restrained pipe	750.00	lf		6,000	-			-	8.00 /lf	6,000
n	8005	Fitting, 90 degree bend,DIP,cement lined,MJ, 06"dia,C110 water piping	5.00	ea	481	1,504	-		16	-	400.104 /ea	2,001
	8205	Fitting, 45 degree bend,DIP,cement lined,MJ,6"dia,C110 water piping	4.00	ea	385	691	-		13	-	272.105 /ea	1,088
n	4702	DIP,Polywrap 8 mil LDT 500ft,6"dia	3.00	roll	167	1,255	-		-	-	473.70 /roll	1,421

Central Kitsap Treatment Plant Solids Handling

Kitsap County

Detail Report - Direct Costs

	Item	Description	Takeoff Qty		Labor Amount	Material Amount	Subcontract Amount	Subcontract Name	Equipment Amount	Other Amount	Total Unit Cost	Total Amount
		33 05 19.006 Buried Pipe, Ductile Iron, 06" Dia			*45,616*	*53,116*			*34,654*		*118.565/LF*	*133,386*
		1,125.00 LF										
		855.106 Labor hours										
		680.460 Equipment hours										
		33.05.19.030 Primary Sludge - Ductile Iron - 06" Dia			*45,616*	*53,116*	*0*		*34,654*	*0*	*118.565/LF*	*133,386*
		1,125.00 LF										
		855.106 Labor hours										
		680.460 Equipment hours										
33.05.19.035		*Scum - Ductile Iron - 04" Dia*										
33 05 19.004		*Buried Pipe, Ductile Iron, 04" Dia*										
n	7040	Rent trench box, 7200 lbs, 6' x 20'	4.00	day	-	-	-		494	-	123.46 /day	494
	10000	Total Trench Excavation - (Informational only - NO COST)	413.00	cy		-	-			-		
n	7001	Pipeline Testing, Hydro (LF)	250.00	lf	617	19	-		56	-	2.767 /lf	692
n	09010	Trench, Backfill, and Compaction w/ Crew 2	4.00	days	10,722	-	-		8,517	-	4,809.735 /days	19,239
	0050	Fill by borrow and utility bedding, for pipe and conduit, crushed or screened bank run gravel, excludes compaction	114.00	lcy	938	3,534	-		173	-	40.74 /lcy	4,644
n	0560	Hauling,excavated borrow material,loose cubic yards,20 mile round trip,0.4 load/hr,base wide rate,12 cy truck,highway haulers,excludes loading	132.00	lcy	1,501	-	-		2,063	-	27.002 /lcy	3,564
	00500	6" Wide Underground Utility Marking Tape	3.00	clf	8	114	-		-	-	40.70 /clf	122
n	2020	Distribution piping,DIP,cement lined,fastite,20' lengths, 04"dia, Press Class 350, Excludes excavation, backfill, bedding	250.00	LF	1,648	6,780	-		1,058	-	37.942 /LF	9,486
n	4100	Distribution Piping,DIP,Flex-Ring Joint, 04"dia,additional per linear foot of restrained pipe	250.00	lf		2,000	-			-	8.00 /lf	2,000
n	4400	Distribution Piping,DIP,Glass-Lining, 04"dia,additional per linear foot	250.00	lf	-	18,400	-		-	-	73.60 /lf	18,400
n	8000	Fitting, 90 degree bend,DIP,cement lined,MJ, 04"dia,C110 water piping	2.00	ea	88	389	-		4	-	240.46 /ea	481
	8200	Fitting, 45 degree bend,DIP,cement lined,MJ,4"dia,C110 water piping	2.00	ea	88	176	-		4	-	134.06 /ea	268
n	4701	DIP,Polywrap 8 mil LDT 500ft,4"dia	1.00	roll	56	240	-		-	-	295.52 /roll	296
		33 05 19.004 Buried Pipe, Ductile Iron, 04" Dia			*15,666*	*31,652*			*12,368*		*238.742/LF*	*59,685*
		250.00 LF										
		297.689 Labor hours										
		271.237 Equipment hours										
		33.05.19.035 Scum - Ductile Iron - 04" Dia			*15,666*	*31,652*	*0*		*12,368*	*0*	*238.742/LF*	*59,685*
		250.00 LF										
		297.689 Labor hours										
		271.237 Equipment hours										

AACE Classification Accuracy Range

Upper Range +50% **Lower Range -30%**

Central Kitsap Treatment Plant Solids Handling

Kitsap County

Detail Report - Direct Costs

	Item	Description	Takeoff Qty		Labor Amount	Material Amount	Subcontract Amount	Subcontract Name	Equipment Amount	Other Amount	Total Unit Cost	Total Amount
33.05.19.040		*Septage - Ductile Iron - 04" Dia*										
33 05 19.004		*Buried Pipe, Ductile Iron, 04" Dia*										
n	7040	Rent trench box, 7200 lbs, 6' x 20'	4.00	day	-	-	-		494	-	123.46 /day	494
	10000	Total Trench Excavation - (Informational only - NO COST)	718.00	cy		-	-			-		
n	7001	Pipeline Testing, Hydro (LF)	435.00	lf	1,074	33	-		97	-	2.767 /lf	1,204
n	09010	Trench, Backfill, and Compaction w/ Crew 2	4.00	days	10,722	-	-		8,517	-	4,809.735 /days	19,239
	0050	Fill by borrow and utility bedding, for pipe and conduit, crushed or screened bank run gravel, excludes compaction	198.00	lcy	1,628	6,138	-		300	-	40.74 /lcy	8,067
n	0560	Hauling,excavated borrow material,loose cubic yards,20 mile round trip,0.4 load/hr,base wide rate,12 cy truck,highway haulers,excludes loading	228.00	lcy	2,593	-	-		3,563	-	27.002 /lcy	6,157
	00500	6" Wide Underground Utility Marking Tape	5.00	clf	14	190	-		-	-	40.70 /clf	204
n	2020	Distribution piping,DIP,cement lined,fastite,20' lengths, 04"dia, Press Class 350, Excludes excavation, backfill, bedding	435.00	LF	2,868	11,797	-		1,840	-	37.942 /LF	16,505
n	4100	Distribution Piping,DIP,Flex-Ring Joint, 04"dia,additional per linear foot of restrained pipe	250.00	lf		2,000	-			-	8.00 /lf	2,000
n	8000	Fitting, 90 degree bend,DIP,cement lined,MJ, 04"dia,C110 water piping	2.00	ea	88	389	-		4	-	240.46 /ea	481
	8200	Fitting, 45 degree bend,DIP,cement lined,MJ,4"dia,C110 water piping	2.00	ea	88	176	-		4	-	134.06 /ea	268
n	4701	DIP,Polywrap 8 mil LDT 500ft,4"dia	1.00	roll	56	240	-		-	-	295.52 /roll	296
		33 05 19.004 Buried Pipe, Ductile Iron, 04" Dia			*19,130*	*20,963*			*14,820*		*126.236/LF*	*54,912*
		435.00 LF										
		360.535 Labor hours										
		305.770 Equipment hours										
		33.05.19.040 Septage - Ductile Iron - 04" Dia			*19,130*	*20,963*	*0*		*14,820*	*0*	*126.236/LF*	*54,912*
		435.00 LF										
		360.535 Labor hours										
		305.770 Equipment hours										
33.05.19.045		*Septage Bypass - Ductile Iron - 04" Dia*										
33 05 19.004		*Buried Pipe, Ductile Iron, 04" Dia*										
n	7040	Rent trench box, 7200 lbs, 6' x 20'	4.00	day	-	-	-		494	-	123.46 /day	494
	10000	Total Trench Excavation - (Informational only - NO COST)	495.00	cy		-	-			-		
n	7001	Pipeline Testing, Hydro (LF)	300.00	lf	740	23	-		67	-	2.767 /lf	830
n	09010	Trench, Backfill, and Compaction w/ Crew 2	4.00	days	10,722	-	-		8,517	-	4,809.735 /days	19,239
	0050	Fill by borrow and utility bedding, for pipe and conduit, crushed or screened bank run gravel, excludes compaction	137.00	lcy	1,127	4,247	-		208	-	40.74 /lcy	5,581
n	0560	Hauling,excavated borrow material,loose cubic yards,20 mile round trip,0.4 load/hr,base wide rate,12 cy truck,highway haulers,excludes loading	158.00	lcy	1,797	-	-		2,469	-	27.002 /lcy	4,266

Central Kitsap Treatment Plant Solids Handling

Kitsap County

Detail Report - Direct Costs

	Item	Description	Takeoff Qty		Labor Amount	Material Amount	Subcontract Amount	Subcontract Name	Equipment Amount	Other Amount	Total Unit Cost	Total Amount
33 05 19.004		*Buried Pipe, Ductile Iron, 04" Dia*										
	00500	6" Wide Underground Utility Marking Tape	3.00	clf	8	114	-		-	-	40.70 /clf	122
n	2020	Distribution piping,DIP,cement lined,fastite,20' lengths, 04"dia, Press Class 350, Excludes excavation, backfill, bedding	300.00	LF	1,978	8,136	-		1,269	-	37.942 /LF	11,383
n	4100	Distribution Piping,DIP,Flex-Ring Joint, 04"dia,additional per linear foot of restrained pipe	250.00	lf		2,000	-			-	8.00 /lf	2,000
n	8000	Fitting, 90 degree bend,DIP,cement lined,MJ, 04"dia,C110 water piping	1.00	ea	44	194	-		2	-	240.47 /ea	240
	8200	Fitting, 45 degree bend,DIP,cement lined,MJ,4"dia,C110 water piping	2.00	ea	88	176	-		4	-	134.06 /ea	268
n	4701	DIP,Polywrap 8 mil LDT 500ft,4"dia	1.00	roll	56	240	-		-	-	295.52 /roll	296
		33 05 19.004 Buried Pipe, Ductile Iron, 04" Dia			*16,560*	*15,130*			*13,030*		*149.065/LF*	*44,720*
		300.00 LF										
		313.902 Labor hours										
		280.577 Equipment hours										
		33.05.19.045 Septage Bypass - Ductile Iron - 04" Dia			*16,560*	*15,130*	*0*		*13,030*	*0*	*149.065/LF*	*44,720*
		300.00 LF										
		313.902 Labor hours										
		280.577 Equipment hours										
33.05.19.050		*Septage Bypass - Ductile Iron - 08" Dia*										
33 05 19.008		*Buried Pipe, Ductile Iron, 08" Dia*										
n	7040	Rent trench box, 7200 lbs, 6' x 20'	4.00	day	-	-	-		494	-	123.46 /day	494
	10000	Total Trench Excavation - (Informational only - NO COST)	596.00	cy		-	-			-		
n	7001	Pipeline Testing, Hydro (LF)	325.00	lf	802	24	-		73	-	2.767 /lf	899
n	09010	Trench, Backfill, and Compaction w/ Crew 2	4.00	days	10,722	-	-		8,517	-	4,809.735 /days	19,239
	0050	Fill by borrow and utility bedding, for pipe and conduit, crushed or screened bank run gravel, excludes compaction	180.00	lcy	1,480	5,580	-		273	-	40.74 /lcy	7,333
n	0560	Hauling,excavated borrow material,loose cubic yards,20 mile round trip,0.4 load/hr,base wide rate,12 cy truck,highway haulers,excludes loading	208.00	lcy	2,366	-	-		3,251	-	27.002 /lcy	5,616
	00500	6" Wide Underground Utility Marking Tape	4.00	clf	11	152	-		-	-	40.70 /clf	163
n	2060	Distribution piping,DIP,cement lined,fastite,20' lengths, 08"dia, Press Class 350, Excludes excavation, backfill, bedding	325.00	LF	2,380	9,770	-		1,528	-	42.085 /LF	13,678
n	4102	Distribution Piping,DIP,Flex-Ring Joint, 08"dia,additional per linear foot of restrained pipe	250.00	lf		2,665	-			-	10.66 /lf	2,665
n	8010	Fitting, 90 degree bend,DIP,cement lined,MJ, 08"dia,C110 water piping	4.00	ea	593	1,965	-		17	-	643.75 /ea	2,575
	8210	Fitting, 45 degree bend,DIP,cement lined,MJ,8"dia,C110 water piping	1.00	ea	148	250	-		4	-	402.15 /ea	402
n	4703	DIP,Polywrap 8 mil LDT 500ft,8"dia	1.00	roll	56	523	-		-	-	578.24 /roll	578

Central Kitsap Treatment Plant Solids Handling

Kitsap County

Detail Report - Direct Costs

	Item	Description	Takeoff Qty		Labor Amount	Material Amount	Subcontract Amount	Subcontract Name	Equipment Amount	Other Amount	Total Unit Cost	Total Amount
		33 05 19.008 Buried Pipe, Ductile Iron, 08" Dia			*18,559*	*20,928*			*14,155*		*165.054/LF*	*53,642*
		325.00 LF										
		350.529 Labor hours										
		296.111 Equipment hours										
		33.05.19.050 Septage Bypass - Ductile Iron - 08" Dia			*18,559*	*20,928*	*0*		*14,155*	*0*	*165.054/LF*	*53,642*
		325.00 LF										
		350.529 Labor hours										
		296.111 Equipment hours										
33.05.19.055		*Sludge Transfer - Ductile Iron - 06" Dia*										
33 05 19.006		*Buried Pipe, Ductile Iron, 06" Dia*										
n	7040	Rent trench box, 7200 lbs, 6' x 20'	3.00	day	-	-	-		370	-	123.46 /day	370
	10000	Total Trench Excavation - (Informational only - NO COST)	348.00	cy		-	-			-		
n	7001	Pipeline Testing, Hydro (LF)	200.00	lf	494	15	-		45	-	2.767 /lf	553
n	09010	Trench, Backfill, and Compaction w/ Crew 2	3.00	days	8,042	-	-		6,387	-	4,809.737 /days	14,429
	0050	Fill by borrow and utility bedding, for pipe and conduit, crushed or screened bank run gravel, excludes compaction	101.00	lcy	831	3,131	-		153	-	40.74 /lcy	4,115
n	0560	Hauling,excavated borrow material,loose cubic yards,20 mile round trip,0.4 load/hr,base wide rate,12 cy truck,highway haulers,excludes loading	117.00	lcy	1,331	-	-		1,828	-	27.002 /lcy	3,159
	00500	6" Wide Underground Utility Marking Tape	2.00	clf	5	76	-		-	-	40.70 /clf	81
n	2040	Distribution piping,DIP,cement lined,fastite,20' lengths, 06"dia, Press Class 350, Excludes excavation, backfill, bedding	200.00	LF	1,465	4,542	-		940	-	34.735 /LF	6,947
n	4101	Distribution Piping,DIP,Flex-Ring Joint, 06"dia,additional per linear foot of restrained pipe	150.00	lf		1,200	-			-	8.00 /lf	1,200
n	8005	Fitting, 90 degree bend,DIP,cement lined,MJ, 06"dia,C110 water piping	1.00	ea	96	301	-		3	-	400.10 /ea	400
n	4702	DIP,Polywrap 8 mil LDT 500ft,6"dia	1.00	roll	56	418	-		-	-	473.70 /roll	474
		33 05 19.006 Buried Pipe, Ductile Iron, 06" Dia			*12,319*	*9,683*			*9,727*		*158.646/LF*	*31,729*
		200.00 LF										
		233.691 Labor hours										
		209.506 Equipment hours										
		33.05.19.055 Sludge Transfer - Ductile Iron - 06" Dia			*12,319*	*9,683*	*0*		*9,727*	*0*	*158.646/LF*	*31,729*
		200.00 LF										
		233.691 Labor hours										
		209.506 Equipment hours										
33.05.19.060		*Thickened Sludge - Ductile Iron - 06" Dia*										
33 05 19.006		*Buried Pipe, Ductile Iron, 06" Dia*										
n	7040	Rent trench box, 7200 lbs, 6' x 20'	4.00	day	-	-	-		494	-	123.46 /day	494

AACE Classification Accuracy Range

Upper Range +50% **Lower Range -30%**

Central Kitsap Treatment Plant Solids Handling

Kitsap County

Detail Report - Direct Costs

	Item	Description	Takeoff Qty		Labor Amount	Material Amount	Subcontract Amount	Subcontract Name	Equipment Amount	Other Amount	Total Unit Cost	Total Amount
33 05 19.006		*Buried Pipe, Ductile Iron, 06" Dia*										
	10000	Total Trench Excavation - (Informational only - NO COST)	696.00	cy		-	-			-		
n	7001	Pipeline Testing, Hydro (LF)	400.00	lf	987	30	-		90	-	2.767 /lf	1,107
n	09010	Trench, Backfill, and Compaction w/ Crew 2	4.00	days	10,722	-	-		8,517	-	4,809.735 /days	19,239
	0050	Fill by borrow and utility bedding, for pipe and conduit, crushed or screened bank run gravel, excludes compaction	202.00	lcy	1,661	6,262	-		306	-	40.74 /lcy	8,229
n	0560	Hauling,excavated borrow material,loose cubic yards,20 mile round trip,0.4 load/hr,base wide rate,12 cy truck,highway haulers,excludes loading	233.00	lcy	2,650	-	-		3,641	-	27.002 /lcy	6,292
	00500	6" Wide Underground Utility Marking Tape	4.00	clf	11	152	-		-	-	40.70 /clf	163
n	2040	Distribution piping,DIP,cement lined,fastite,20' lengths, 06"dia, Press Class 350, Excludes excavation, backfill, bedding	400.00	LF	2,930	9,084	-		1,880	-	34.735 /LF	13,894
n	4101	Distribution Piping,DIP,Flex-Ring Joint, 06"dia,additional per linear foot of restrained pipe	200.00	lf		1,600	-			-	8.00 /lf	1,600
n	8005	Fitting, 90 degree bend,DIP,cement lined,MJ, 06"dia,C110 water piping	1.00	ea	96	301	-		3	-	400.10 /ea	400
	8205	Fitting, 45 degree bend,DIP,cement lined,MJ,6"dia,C110 water piping	2.00	ea	192	346	-		6	-	272.11 /ea	544
n	4702	DIP,Polywrap 8 mil LDT 500ft,6"dia	1.00	roll	56	418	-		-	-	473.70 /roll	474
		33 05 19.006 Buried Pipe, Ductile Iron, 06" Dia			*19,306*	*18,193*			*14,937*		*131.088/LF*	*52,435*
		400.00 LF										
		363.927 Labor hours										
		306.836 Equipment hours										
		33.05.19.060 Thickened Sludge - Ductile Iron - 06" Dia			*19,306*	*18,193*	*0*		*14,937*	*0*	*131.088/LF*	*52,435*
		400.00 LF										
		363.927 Labor hours										
		306.836 Equipment hours										
33.05.19.066		*TWAS - Thickened Waste Activated Sludge - Ductile Iron - 06" Dia*										
33 05 19.006		*Buried Pipe, Ductile Iron, 06" Dia*										
n	7040	Rent trench box, 7200 lbs, 6' x 20'	4.00	day	-	-	-		494	-	123.46 /day	494
	10000	Total Trench Excavation - (Informational only - NO COST)	478.00	cy		-	-			-		
n	7001	Pipeline Testing, Hydro (LF)	275.00	lf	679	21	-		62	-	2.767 /lf	761
n	09010	Trench, Backfill, and Compaction w/ Crew 2	4.00	days	10,722	-	-		8,517	-	4,809.735 /days	19,239
	0050	Fill by borrow and utility bedding, for pipe and conduit, crushed or screened bank run gravel, excludes compaction	139.00	lcy	1,143	4,309	-		211	-	40.74 /lcy	5,663
n	0560	Hauling,excavated borrow material,loose cubic yards,20 mile round trip,0.4 load/hr,base wide rate,12 cy truck,highway haulers,excludes loading	161.00	lcy	1,831	-	-		2,516	-	27.002 /lcy	4,347
	00500	6" Wide Underground Utility Marking Tape	3.00	clf	8	114	-		-	-	40.70 /clf	122

Central Kitsap Treatment Plant Solids Handling

Kitsap County

Detail Report - Direct Costs

	Item	Description	Takeoff Qty		Labor Amount	Material Amount	Subcontract Amount	Subcontract Name	Equipment Amount	Other Amount	Total Unit Cost	Total Amount
33 05 19.006		*Buried Pipe, Ductile Iron, 06" Dia*										
n	2040	Distribution piping,DIP,cement lined,fastite,20' lengths, 06"dia, Press Class 350, Excludes excavation, backfill, bedding	275.00	LF	2,014	6,245	-		1,293	-	34.735 /LF	9,552
n	4101	Distribution Piping,DIP,Flex-Ring Joint, 06"dia,additional per linear foot of restrained pipe	150.00	lf		1,200	-			-	8.00 /lf	1,200
n	8005	Fitting, 90 degree bend,DIP,cement lined,MJ, 06"dia,C110 water piping	2.00	ea	192	602	-		6	-	400.11 /ea	800
	8205	Fitting, 45 degree bend,DIP,cement lined,MJ,6"dia,C110 water piping	2.00	ea	192	346	-		6	-	272.11 /ea	544
n	4702	DIP,Polywrap 8 mil LDT 500ft,6"dia	1.00	roll	56	418	-		-	-	473.70 /roll	474
		33 05 19.006 Buried Pipe, Ductile Iron, 06" Dia			*16,838*	*13,254*			*13,104*		*157.077/LF*	*43,196*
		275.00 LF										
		319.104 Labor hours										
		281.181 Equipment hours										
		33.05.19.066 TWAS - Thickened Waste Activated Sludge - Ductile Iron - 06" Dia			*16,838*	*13,254*	*0*		*13,104*	*0*	*157.077/LF*	*43,196*
		275.00 LF										
		319.104 Labor hours										
		281.181 Equipment hours										
33.05.19.070		*WAS - Waste Activated Sludge - Ductile Iron - 06" Dia*										
33 05 19.006		*Buried Pipe, Ductile Iron, 06" Dia*										
n	7040	Rent trench box, 7200 lbs, 6' x 20'	6.00	day	-	-	-		741	-	123.46 /day	741
	10000	Total Trench Excavation - (Informational only - NO COST)	983.00	cy		-	-			-		
n	7001	Pipeline Testing, Hydro (LF)	565.00	lf	1,394	42	-		127	-	2.767 /lf	1,563
n	09010	Trench, Backfill, and Compaction w/ Crew 2	6.00	days	16,084	-	-		12,775	-	4,809.737 /days	28,858
	0050	Fill by borrow and utility bedding, for pipe and conduit, crushed or screened bank run gravel, excludes compaction	285.00	lcy	2,344	8,835	-		432	-	40.74 /lcy	11,611
n	0560	Hauling,excavated borrow material,loose cubic yards,20 mile round trip,0.4 load/hr,base wide rate,12 cy truck,highway haulers,excludes loading	328.00	lcy	3,731	-	-		5,126	-	27.002 /lcy	8,857
	00500	6" Wide Underground Utility Marking Tape	6.00	clf	16	228	-		-	-	40.70 /clf	244
n	2040	Distribution piping,DIP,cement lined,fastite,20' lengths, 06"dia, Press Class 350, Excludes excavation, backfill, bedding	565.00	LF	4,138	12,831	-		2,656	-	34.735 /LF	19,625
n	4101	Distribution Piping,DIP,Flex-Ring Joint, 06"dia,additional per linear foot of restrained pipe	350.00	lf		2,800	-			-	8.00 /lf	2,800
n	8005	Fitting, 90 degree bend,DIP,cement lined,MJ, 06"dia,C110 water piping	4.00	ea	385	1,203	-		13	-	400.105 /ea	1,600
	8205	Fitting, 45 degree bend,DIP,cement lined,MJ,6"dia,C110 water piping	2.00	ea	192	346	-		6	-	272.11 /ea	544
n	4702	DIP,Polywrap 8 mil LDT 500ft,6"dia	2.00	roll	111	836	-		-	-	473.70 /roll	947

Central Kitsap Treatment Plant Solids Handling

Kitsap County

Detail Report - Direct Costs

Item		Description	Takeoff Qty		Labor Amount	Material Amount	Subcontract Amount	Subcontract Name	Equipment Amount	Other Amount	Total Unit Cost	Total Amount
		33 05 19.006 Buried Pipe, Ductile Iron, 06" Dia			*28,395*	*27,122*			*21,875*		*136.976/LF*	*77,392*
		565.00 LF										
		535.658 Labor hours 452.814 Equipment hours										
		33.05.19.070 WAS - Waste Activated Sludge - Ductile Iron - 06" Dia			*28,395*	*27,122*	*0*		*21,875*	*0*	*136.976/LF*	*77,392*
		565.00 LF										
		535.658 Labor hours 452.814 Equipment hours										
33.05.24.005		*Hot Water Supply and Return - Steel - 8" Dia - Allowance*										
33 05 24.108		*Buried Pipe, Carbon Steel, 08" Dia*										
	10000	Total Trench Excavation - (Informational only - NO COST)	7,330.00	cy		-	-			-		
n	7001	Pipeline Testing, Hydro (LF)	4,000.00	lf	9,872	300	-		896	-	2.767 /lf	11,068
	7450	Insulation, pipe covering (price copper tube one size less than I.P.S.), fiberglass with all service jacket, 2" wall, 7" iron pipe size	400.00	lf	4,284	3,820	-		-	-	20.261 /lf	8,104
n	0540	Pipe insultn,protctv jacktng,aluminum,metal roll,aluminum with polykrft moisture barrier,smooth,.016"thk,12"id,cut from roll goods,size based insulatn	400.00	lf	3,744	1,912	-		-	-	14.139 /lf	5,656
	1420	Pipe insulation, protective jacketing, aluminum, fitting covers, 90> LR elbow, 2 piece, 12", size based on OD of insulation	100.00	ea	1,358	3,250	-		-	-	46.078 /ea	4,608
	2260	Pipe insulation, protective jacketing, aluminum, fitting covers, 45> elbow, 2 piece, 12", size based on OD of insulation	100.00	ea	1,358	2,700	-		-	-	40.578 /ea	4,058
	3250	Pipe insulation, protective jacketing, aluminum, fitting covers, tee, 4 piece, 12", size based on OD of insulation	20.00	ea	438	970	-		-	-	70.409 /ea	1,408
	2140	Pipe, steel, black, welded, 8" diameter, schedule 40, Spec. A-53, includes yoke & roll hanger assembly, sized for covering, 10' OC	1,200.00	LF	67,498	106,200	-		4,684	-	148.652 /LF	178,382
	9340	Pipe, steel, Welding labor per joint, 8" pipe size, schedule 40, welding	120.00	ea	25,315	-	-		2,717	-	233.598 /ea	28,032
	3150	Elbow, 90 Deg., steel, carbon steel, black, long radius, butt weld, standard weight, 8" pipe size, includes 1 weld per joint and weld machine	10.00	ea	4,350	2,250	-		302	-	690.174 /ea	6,902
	3310	Elbow, 45 Deg., steel, carbon steel, black, long radius, butt weld, standard weight, 8" pipe size, includes 1 weld per joint and weld machine	10.00	ea	4,350	1,590	-		302	-	624.174 /ea	6,242
	3460	Tee, steel, carbon steel, black, straight, butt weld, standard weight, 8" pipe size, includes 1 weld per joint and weld machine	20.00	ea	13,050	6,900	-		906	-	1,042.76 /ea	20,855
n	09010	Trench, Backfill, and Compaction w/ Crew 2	14.00	days	37,528	-	-		29,808	-	4,809.736 /days	67,336

Central Kitsap Treatment Plant Solids Handling

Kitsap County

Detail Report - Direct Costs

	Item	Description	Takeoff Qty		Labor Amount	Material Amount	Subcontract Amount	Name	Equipment Amount	Other Amount	Total Unit Cost	Total Amount
33 05 24.108		*Buried Pipe, Carbon Steel, 08" Dia*										
	0050	Fill by borrow and utility bedding, for pipe and conduit, crushed or screened bank run gravel, excludes compaction	1,659.00	lcy	13,644	51,429	-		2,515	-	40.74 /lcy	67,588
n	0560	Hauling,excavated borrow material,loose cubic yards,20 mile round trip,0.4 load/hr,base wide rate,12 cy truck,highway haulers,excludes loading	1,909.50	lcy	21,720	-	-		29,841	-	27.002 /lcy	51,561
	00500	6" Wide Underground Utility Marking Tape	40.00	clf	108	1,520	-		-	-	40.70 /clf	1,628
		33 05 24.108 Buried Pipe, Carbon Steel, 08" Dia			*208,616*	*182,841*			*71,970*		*386.189/LF*	*463,427*
		1,200.00 LF										
		3,430.115 Labor hours										
		1,845.877 Equipment hours										
		33.05.24.005 Hot Water Supply and Return - Steel - 8" Dia - Allowance			*208,616*	*182,841*	*0*		*71,970*	*0*	*386.189/LF*	*463,427*
		1,200.00 LF										
		3,430.115 Labor hours										
		1,845.877 Equipment hours										
33.05.31.005		*Sanitary Sewer - PVC SDR 35 - 08" - Allowance*										
33 05 31.208		*Buried Pipe, PVC, 08" Dia*										
	2080	Public Sanitary Utility Sewerage Piping, piping polyvinyl chloride pipe, B & S, 13' lengths, 8" diameter, SDR 35, excludes excavation or backfill	2,000.00	LF	7,630	25,400	-		-	-	16.515 /LF	33,030
	10000	Total Trench Excavation - (Informational only - NO COST)	3,665.00	cy		-	-			-		
n	7001	Pipeline Testing, Hydro (LF)	2,000.00	lf	4,936	150	-		448	-	2.767 /lf	5,534
	2210	Elbow, 90 Deg., plastic, PVC, socket joint, 8", schedule 80	50.00	ea	8,770	18,000	-		-	-	535.399 /ea	26,770
	2350	Elbow, 45 Deg., plastic, PVC, socket joint, 8", schedule 80	50.00	ea	8,770	17,250	-		-	-	520.399 /ea	26,020
	2500	Tee, plastic, PVC, socket joint, 8", schedule 80	10.00	ea	2,631	5,150	-		-	-	778.098 /ea	7,781
n	09010	Trench, Backfill, and Compaction w/ Crew 2	7.00	days	18,764	-	-		14,904	-	4,809.736 /days	33,668
	0050	Fill by borrow and utility bedding, for pipe and conduit, crushed or screened bank run gravel, excludes compaction	1,106.00	lcy	9,096	34,286	-		1,677	-	40.740 /lcy	45,058
n	0560	Hauling,excavated borrow material,loose cubic yards,20 mile round trip,0.4 load/hr,base wide rate,12 cy truck,highway haulers,excludes loading	1,273.00	lcy	14,480	-	-		19,894	-	27.002 /lcy	34,374
	00500	6" Wide Underground Utility Marking Tape	20.00	clf	54	760	-		-	-	40.70 /clf	814
		33 05 31.208 Buried Pipe, PVC, 08" Dia			*75,130*	*100,996*			*36,923*		*106.525/LF*	*213,049*
		2,000.00 LF										
		1,323.291 Labor hours										
		688.117 Equipment hours										

Central Kitsap Treatment Plant Solids Handling

Kitsap County

Detail Report - Direct Costs

	Item	Description	Takeoff Qty		Labor Amount	Material Amount	Subcontract Amount	Name	Equipment Amount	Other Amount	Total Unit Cost	Total Amount
		33.05.31.005 Sanitary Sewer - PVC SDR 35 - 08" - Allowance			*75,130*	*100,996*	*0*		*36,923*	*0*	*106.525/LF*	*213,049*
		2,000.00 LF										
		1,323.291 Labor hours										
		688.117 Equipment hours										
33.05.31.010		*Non-Potable Washdown Water - PVC - 4" Dia - Allowance*										
33 05 31.204		*Buried Pipe, PVC, 04" Dia*										
	10000	Total Trench Excavation - (Informational only - NO COST)	3,302.00	cy		-	-			-		
n	7001	Pipeline Testing, Hydro (LF)	2,000.00	lf	4,936	150	-		448	-	2.767 /lf	5,534
	02540	Pipe, plastic, PVC, 4" diameter, schedule 80	2,000.00	LF	26,141	26,650	-		-	-	26.395 /LF	52,791
	2190	Elbow, 90 Deg., plastic, PVC, socket joint, 4", schedule 80	50.00	ea	3,196	2,300	-		-	-	109.927 /ea	5,496
	2330	Elbow, 45 Deg., plastic, PVC, socket joint, 4", schedule 80	50.00	ea	3,196	6,300	-		-	-	189.927 /ea	9,496
	2480	Tee, plastic, PVC, socket joint, 4", schedule 80	10.00	ea	959	650	-		-	-	160.891 /ea	1,609
n	09010	Trench, Backfill, and Compaction w/ Crew 2	7.00	days	18,764	-	-		14,904	-	4,809.736 /days	33,668
	0050	Fill by borrow and utility bedding, for pipe and conduit, crushed or screened bank run gravel, excludes compaction	912.00	lcy	7,500	28,272	-		1,383	-	40.74 /lcy	37,155
n	0560	Hauling,excavated borrow material,loose cubic yards,20 mile round trip,0.4 load/hr,base wide rate,12 cy truck,highway haulers,excludes loading	1,049.00	lcy	11,932	-	-		16,394	-	27.002 /lcy	28,325
	00500	6" Wide Underground Utility Marking Tape	20.00	clf	54	760	-		-	-	40.70 /clf	814
		33 05 31.204 Buried Pipe, PVC, 04" Dia			*76,679*	*65,082*			*33,128*		*87.444/LF*	*174,889*
		2,000.00 LF										
		1,314.279 Labor hours										
		631.821 Equipment hours										
		33.05.31.010 Non-Potable Washdown Water - PVC - 4" Dia - Allowance			*76,679*	*65,082*	*0*		*33,128*	*0*	*87.444/LF*	*174,889*
		2,000.00 LF										
		1,314.279 Labor hours										
		631.821 Equipment hours										
33.05.39.004		*Storm Water Pipe - RCP - 12" Dia - Allowance*										
33 05 39.112		*Buried Pipe, RCP, 12" Dia*										
	10000	Total Trench Excavation - (Informational only - NO COST)	2,023.00	cy		-	-			-		
	0380	Ground wire, copper wire, bare solid, #2	10.00	clf	1,078	1,410	-		-	-	248.76 /clf	2,488
n	09010	Trench, Backfill, and Compaction w/ Crew 2	4.00	days	10,722	-	-		8,517	-	4,809.735 /days	19,239
	0050	Fill by borrow and utility bedding, for pipe and conduit, crushed or screened bank run gravel, excludes compaction	653.00	lcy	5,370	20,243	-		990	-	40.74 /lcy	26,603

Central Kitsap Treatment Plant Solids Handling

Kitsap County

Detail Report - Direct Costs

	Item	Description	Takeoff Qty		Labor Amount	Material Amount	Subcontract Amount	Subcontract Name	Equipment Amount	Other Amount	Total Unit Cost	Total Amount
33 05 39.112		*Buried Pipe, RCP, 12" Dia*										
n	0560	Hauling,excavated borrow material,loose cubic yards,20 mile round trip,0.4 load/hr,base wide rate,12 cy truck,highway haulers,excludes loading	752.00	lcy	8,554	-	-		11,752	-	27.002 /lcy	20,306
	2010	Public storm utility drainage piping, reinforced concrete pipe (RCP), 12" diameter, 6' lengths, class 3, excludes excavation or backfill, gaskets	1,000.00	LF	15,997	19,950	-		1,516	-	37.463 /LF	37,463
	6200	Public storm utility drainage piping, gasket, concrete pipe joint, 12"	168.00	ea	-	958	-		-	-	5.70 /ea	958
		33 05 39.112 Buried Pipe, RCP, 12" Dia			*41,721*	*42,561*			*22,775*		*107.057/LF*	*107,057*
		1,000.00 LF										
		802.738 Labor hours										
		434.418 Equipment hours										
		33.05.39.004 Storm Water Pipe - RCP - 12" Dia - Allowance			*41,721*	*42,561*	*0*		*22,775*	*0*	*107.057/LF*	*107,057*
		1,000.00 LF										
		802.738 Labor hours										
		434.418 Equipment hours										
33.05.39.010		*Storm Water Pipe - RCP - 18" Dia - Allowance*										
33 05 39.118		*Buried Pipe, RCP, 18" Dia*										
	10000	Total Trench Excavation - (Informational only - NO COST)	2,324.00	cy		-	-			-		
	0380	Ground wire, copper wire, bare solid, #2	10.00	clf	1,078	1,410	-		-	-	248.76 /clf	2,488
n	09010	Trench, Backfill, and Compaction w/ Crew 2	8.00	days	21,445	-	-		17,033	-	4,809.736 /days	38,478
	0050	Fill by borrow and utility bedding, for pipe and conduit, crushed or screened bank run gravel, excludes compaction	810.00	lcy	6,661	25,110	-		1,228	-	40.74 /lcy	32,999
n	0560	Hauling,excavated borrow material,loose cubic yards,20 mile round trip,0.4 load/hr,base wide rate,12 cy truck,highway haulers,excludes loading	934.00	lcy	10,624	-	-		14,596	-	27.002 /lcy	25,220
	2030	Public storm utility drainage piping, reinforced concrete pipe (RCP), 18" diameter, 6' lengths, class 3, excludes excavation or backfill, gaskets	1,000.00	LF	18,179	27,500	-		1,723	-	47.402 /LF	47,402
	6210	Public Storm Utility Drainage Piping, gasket, concrete pipe joint, 18"	168.00	ea	-	907	-		-	-	5.40 /ea	907
		33 05 39.118 Buried Pipe, RCP, 18" Dia			*57,986*	*54,927*			*34,580*		*147.494/LF*	*147,494*
		1,000.00 LF										
		1,116.828 Labor hours										
		679.397 Equipment hours										
		33.05.39.010 Storm Water Pipe - RCP - 18" Dia - Allowance			*57,986*	*54,927*	*0*		*34,580*	*0*	*147.494/LF*	*147,494*
		1,000.00 LF										
		1,116.828 Labor hours										
		679.397 Equipment hours										

AACE Classification Accuracy Range

Upper Range +50% **Lower Range -30%**

Central Kitsap Treatment Plant Solids Handling

Kitsap County

Detail Report - Direct Costs

	Item	Description	Takeoff Qty		Labor Amount	Material Amount	Subcontract Amount	Subcontract Name	Equipment Amount	Other Amount	Total Unit Cost	Total Amount
33.05.39.015		*Storm Water Pipe - Precast Manholes - 48" Dia x 10' Deep - Allowance*										
33 05 16.048		*Precast Concrete Manhole Structure, 48" (04')*										
	4650	Structural concrete, placing, slab on grade, pumped, over 6" thick, includes leveling (strike off) & consolidation, excludes material	10.00	cy	175	-	-		27	-	20.206 /cy	202
n	0725	Struct SLAB ON GRADE concrete,ready mix,normal wt,4500 psi,includes local aggregate,sand,portland cement and water,delivered, includes all additives	10.00	CY	-	2,300	-		-	-	230.00 /CY	2,300
n	1310	Fill, gravel fill, compacted, under floor slabs, alternate pricing method, 12" deep_SOG	3.00	ecy	33	96	-		4	-	44.143 /ecy	132
n	1135	Hauling, excavated borrow material, loose cubic yards, 20 mile round trip, 0.4 loads/hour, 16.5 c.y. dump trailer, highway haulers, excludes loading	15.00	lcy	123	-	-		186	-	20.625 /lcy	309
	2700	Utility area drain, catch basins or manholes frames and covers, cast iron, watertight, 32" diameter, 575 lb., excluding footing & excavation	5.00	ea	1,028	4,750	-		190	-	1,193.50 /ea	5,968
	1130	Storm drainage manholes, frames and covers, concrete, precast, 4' I.D., 8' deep, excludes footing, excavation, backfill, frame and cover	5.00	ea	4,190	10,625	-		754	-	3,113.74 /ea	15,569
n	1140	Storm drainage manholes,frames and covers,concrete,precast,4'id, excludes footing,excavation,backfill,frame and cover,add for depths over 8'	10.00	vlf	1,047	1,190	-		189	-	242.593 /vlf	2,426
	1300	Storm drainage manholes, frames and covers, precast concrete, 4' diameter manhole, 8" thick top	5.00	EA	771	950	-		142	-	372.626 /EA	1,863
	4000	Storm drainage manholes, frames and covers, steps, standard sizes, galvanized steel	50.00	ea	575	1,250	-		-	-	36.50 /ea	1,825
	9000	Storm Drainage Manholes, Frames, and Covers, Rubber Boot for Connection to Pipe	420.00	dia"	-	1,785	-		-	-	4.25 /dia"	1,785
		33 05 16.048 Precast Concrete Manhole Structure, 48" (04')			*7,942*	*22,946*			*1,491*		*6,475.826/EA*	*32,379*
		5.00 EA										
		145.086 Labor hours										
		36.268 Equipment hours										
		33.05.39.015 Storm Water Pipe - Precast Manholes - 48" Dia x 10' Deep - Allowance			*7,942*	*22,946*	*0*		*1,491*	*0*	*6,475.826/EA*	*32,379*
		5.00 EA										
		145.086 Labor hours										
		36.268 Equipment hours										
33.05.39.020		*Storm Water Pipe - Precast Catch Basins - Allowance*										
33 05 16.315		*Precast Catch Basin, 30" x 30"*										
	01125	Storm drainage catch basin, precast, 30" I.D. SQ, 3' deep, w/ Frame and grate, excludes footing, excavation, backfill	12.00	EA	1,341	11,700	-		603	-	1,137.00 /EA	13,644

AACE Classification Accuracy Range

Upper Range +50% **Lower Range -30%**

Central Kitsap Treatment Plant Solids Handling

Kitsap County

Detail Report - Direct Costs

Item		Description	Takeoff Qty		Labor Amount	Material Amount	Subcontract Amount	Name	Equipment Amount	Other Amount	Total Unit Cost	Total Amount
33 05 16.315		*Precast Catch Basin, 30" x 30"*										
n	01127	Storm drainage catch basin, precast, 30" I.D. SQ, add for depths over 3'	36.00	vlf	3,771	5,920	-		679	-	288.049 /vlf	10,370
		33 05 16.315 Precast Catch Basin, 30" x 30"			*5,111*	*17,620*			*1,282*		*2,001.148/EA*	*24,014*
		12.00 EA										
		91.50 Labor hours										
		25.50 Equipment hours										
		33.05.39.020 Storm Water Pipe - Precast Catch Basins - Allowance			*5,111*	*17,620*	*0*		*1,282*	*0*	*2,001.148/EA*	*24,014*
		12.00 EA										
		91.50 Labor hours										
		25.50 Equipment hours										
		DIVISION 33 UTILITIES (BURIED PIPE AND VALVES)			**986,023**	**1,001,672**	**0**		**470,598**	**0**	**147.291/LF**	**2,458,293**
		16,690.00 LF										
		17,267.001 Labor hours										
		10,238.610 Equipment hours										

DIVISION 40 — PROCESS INTEGRATION (EXPOSED PIPE, VALVES AND GATES)

40.10.15.006 — *Foul Air - Odor Control - FRP Duct - 06" Dia - On Racks*

05 50 00.200		*Pipe Rack - T-Support*										
	0180	Pipe Rack - T-Support	18.00	EA	15,563	45,000	-		-	-	3,364.60 /EA	60,563
		05 50 00.200 Pipe Rack - T-Support			*15,563*	*45,000*					*3,364.60 /EA*	*60,563*
		18.00 EA										
		216.00 Labor hours										
40 10 15.000		*Fiberglass Reinforced Plastic Duct*										
n	1009	Fiberglass Pipe, 06" dia, pipe stiffness (SN) 46 PSI, 20' lengths; incl puchase pipe, string, installation	270.00	LF	1,828	19,170	-		1,866	-	84.681 /LF	22,864
n	1006	Fitting,Fiberglass, 90 Deg Elbow	4.00	ea	267	1,203	-		-	-	367.425 /ea	1,470
		40 10 15.000 Fiberglass Reinforced Plastic Duct			*2,094*	*20,373*			*1,866*		*90.124/LF*	*24,333*
		270.00 LF										
		34.592 Labor hours										
		29.792 Equipment hours										
		40.10.15.006 Foul Air - Odor Control - FRP Duct - 06" Dia - On Racks			*17,657*	*65,373*	*0*		*1,866*	*0*	*314.431/LF*	*84,896*
		270.00 LF										
		250.592 Labor hours										

AACE Classification Accuracy Range

Upper Range +50% **Lower Range -30%**

Central Kitsap Treatment Plant Solids Handling

Kitsap County

Detail Report - Direct Costs

Item		Description	Takeoff Qty		Labor Amount	Material Amount	Subcontract Amount	Subcontract Name	Equipment Amount	Other Amount	Total Unit Cost	Total Amount
		40.10.15.006 Foul Air - Odor Control - FRP Duct - 06" Dia - On Racks			*17,657*	*65,373*	*0*		*1,866*	*0*	*314.431/LF*	*84,896*
		270.00 LF										
		250.592 Labor hours										
		29.792 Equipment hours										
40.10.15.018		*Foul Air - Odor Control - FRP Duct - 18" Dia - On Racks*										
05 50 00.200		*Pipe Rack - T-Support*										
	0180	Pipe Rack - T-Support	10.00	EA	8,646	25,000	-		-	-	3,364.60 /EA	33,646
		05 50 00.200 Pipe Rack - T-Support			*8,646*	*25,000*					*3,364.60 /EA*	*33,646*
		10.00 EA										
		120.00 Labor hours										
40 10 15.000		*Fiberglass Reinforced Plastic Duct*										
n	1012	Fiberglass Pipe, 18" dia, pipe stiffness (SN) 46 PSI, 20' lengths; incl puchase pipe, string, installation	100.00	LF	677	12,500	-		691	-	138.681 /LF	13,868
n	1018	Fiberglass Fitting - 18" Dia - 90 Deg	1.00	ea	169	2,292	-		-	-	2,461.34 /ea	2,461
n	1418	Fiberglass Fitting - 18" Dia - Tee Deg	1.00	ea	169	3,285	-		-	-	3,454.14 /ea	3,454
		40 10 15.000 Fiberglass Reinforced Plastic Duct			*1,016*	*18,077*			*691*		*197.835/LF*	*19,784*
		100.00 LF										
		17.134 Labor hours										
		11.034 Equipment hours										
		40.10.15.018 Foul Air - Odor Control - FRP Duct - 18" Dia - On Racks			*9,662*	*43,077*	*0*		*691*	*0*	*534.295/LF*	*53,430*
		100.00 LF										
		137.134 Labor hours										
		11.034 Equipment hours										
40.10.15.020		*Foul Air - Odor Control - FRP Duct - 20" Dia - On Racks*										
05 50 00.200		*Pipe Rack - T-Support*										
	0180	Pipe Rack - T-Support	20.00	EA	17,292	70,000	-		-	-	4,364.600 /EA	87,292
		05 50 00.200 Pipe Rack - T-Support			*17,292*	*70,000*					*4,364.600/EA*	*87,292*
		20.00 EA										
		240.00 Labor hours										
40 10 15.000		*Fiberglass Reinforced Plastic Duct*										
n	1014	Fiberglass Pipe, 20" dia, pipe stiffness (SN) 46 PSI, 20' lengths; incl puchase pipe only; excl string, installation	200.00	LF	-	60,000	-		-	-	300.00 /LF	60,000
n	1020	Fiberglass Fitting - 20" Dia - 90	1.00	ea	197	2,804	-		-	-	3,001.10 /ea	3,001
n	1420	Fiberglass Fitting - 20" Dia - Tee	2.00	ea	394	8,286	-		-	-	4,340.295 /ea	8,681

Central Kitsap Treatment Plant Solids Handling
Kitsap County
Detail Report - Direct Costs

Item	Description	Takeoff Qty	Labor Amount	Material Amount	Subcontract Amount	Subcontract Name	Equipment Amount	Other Amount	Total Unit Cost	Total Amount
	40 10 15.000 Fiberglass Reinforced Plastic Duct		*591*	*71,090*					*358.408/LF*	*71,682*
	200.00 LF									
	10.65 Labor hours									
	40.10.15.020 Foul Air - Odor Control - FRP Duct - 20" Dia - On Racks		*17,883*	*141,090*	*0*		*0*	*0*	*794.868/LF*	*158,974*
	200.00 LF									
	250.65 Labor hours									
	DIVISION 40 PROCESS INTEGRATION (EXPOSED PIPE, VALVES AND GATES)		**45,202**	**249,540**	**0**		**2,557**	**0**	**521.578/LF**	**297,299**
	570.00 LF									
	638.376 Labor hours									
	40.826 Equipment hours									
	007 YARD PIPING		***1,046,624***	***1,274,616***	***0***		***473,696***	***0***	***161.838/LF***	***2,794,936***
	17,270.00 LF									
	18,169.359 Labor hours									
	10,293.642 Equipment hours									

011 FACILITY OR BUILDING DEMOLITION

DIVISION 02 — EXISTING CONDITIONS

02.41.00.022 — *Demo asphalt paving*

Item	Description	Takeoff Qty		Labor Amount	Material Amount	Subcontract Amount	Subcontract Name	Equipment Amount	Other Amount	Total Unit Cost	Total Amount
02 41 00.010	*General Site Demolition*										
5010	Demolish, remove pavement & curb, remove bituminous pavement, up to, 3" thick, excludes hauling and disposal fees	150.00	SY	863	-	-		526	-	9.259 /SY	1,389
0120	Sawcut asphalt pavement	125.00	lf	139	4	-		30	-	1.376 /lf	172
	02 41 00.010 General Site Demolition			*1,001*	*4*			*556*			*1,561*
	14.75 Labor hours										
	14.75 Equipment hours										
	02.41.00.022 Demo asphalt paving			*1,001*	*4*	*0*		*556*	*0*	*10.406/SY*	*1,561*
	150.00 SY										
	14.75 Labor hours										
	14.75 Equipment hours										

02.41.00.023 — *Demo concrete paving - new building footprint*

Central Kitsap Treatment Plant Solids Handling

Kitsap County

Detail Report - Direct Costs

Item		Description	Takeoff Qty		Labor Amount	Material Amount	Subcontract Amount	Subcontract Name	Equipment Amount	Other Amount	Total Unit Cost	Total Amount
02 41 00.010		*General Site Demolition*										
n	0060	Selective concrete demolition, average reinforcing, break into small pieces, excludes shoring, bracing, saw torch cutting, loading, hauling, dumping	30.00	CY	4,541	-	-		712	-	175.095 /CY	5,253
		02 41 00.010 General Site Demolition			*4,541*				*712*			*5,253*
		75.00 Labor hours										
		75.00 Equipment hours										
		02.41.00.023 Demo concrete paving - new building footprint			*4,541*	*0*	*0*		*712*	*0*	*175.095/CY*	*5,253*
		30.00 CY										
		75.00 Labor hours										
		75.00 Equipment hours										
02.41.00.024		*Demo Storm Drain*										
02 41 00.010		*General Site Demolition*										
	5600	Demolish, remove pavement & curb with hand held air equipment, excludes hauling	40.00	LF	2,435	-	-		1,242	-	91.910 /LF	3,676
		02 41 00.010 General Site Demolition			*2,435*				*1,242*			*3,676*
		36.924 Labor hours										
		36.924 Equipment hours										
		02.41.00.024 Demo Storm Drain			*2,435*	*0*	*0*		*1,242*	*0*	*91.910/LF*	*3,676*
		40.00 LF										
		36.924 Labor hours										
		36.924 Equipment hours										
02.41.00.090		*Load and Haul Demo materials offsite - Site Demo*										
02 41 00.010		*General Site Demolition*										
n	0561	Hauling,demolitiion material, 20 mile round trip,0.4 load/hr,12 cy truck,highway haulers,excludes loading	130.00	Ton	1,381	5,200	-		1,505	-	62.200 /Ton	8,086
n	0020	Load concrete/asphalt/debris for removal	130.00	ton	227	-	-		569	-	6.122 /ton	796
		02 41 00.010 General Site Demolition			*1,608*	*5,200*			*2,074*			*8,882*
		23.01 Labor hours										
		23.01 Equipment hours										
		02.41.00.090 Load and Haul Demo materials offsite - Site Demo			*1,608*	*5,200*	*0*		*2,074*	*0*	*68.322/Ton*	*8,882*
		130.00 Ton										
		23.01 Labor hours										
		23.01 Equipment hours										
02.41.14.052		*Demo Exist Septage Receiving*										

Central Kitsap Treatment Plant Solids Handling

Kitsap County

Detail Report - Direct Costs

Item		Description	Takeoff Qty		Labor Amount	Material Amount	Subcontract Amount	Name	Equipment Amount	Other Amount	Total Unit Cost	Total Amount
02 41 00.120		*Structure Demolition*										
n	5300	Demo concrete receiving station	2,600.00	SF		-	65,000			-	25.00 /SF	65,000
		02 41 00.120 Structure Demolition					*65,000*					*65,000*
		02.41.14.052 Demo Exist Septage Receiving			*0*	*0*	*65,000*		*0*	*0*	*25.00 /SF*	*65,000*
		2,600.00 SF										
02.41.14.053		*Demo Exist Digester Control Building*										
02 41 00.120		*Structure Demolition*										
n	5300	Demo Control Building	1,300.00	SF		-	58,500			-	45.00 /SF	58,500
		02 41 00.120 Structure Demolition					*58,500*					*58,500*
		02.41.14.053 Demo Exist Digester Control Building			*0*	*0*	*58,500*		*0*	*0*		*58,500*
02.41.14.054		*Demo Exist Fuel Tank (DIG 1 & 2)*										
02 41 00.120		*Structure Demolition*										
n	5300	Demo fuel tank	1.00	LS	0	-	15,000		0	-	15,000.00 /LS	15,000
		02 41 00.120 Structure Demolition					*15,000*					*15,000*
		02.41.14.054 Demo Exist Fuel Tank (DIG 1 & 2)			*0*	*0*	*15,000*		*0*	*0*	*15,000.00 /LS*	*15,000*
		1.00 LS										
02.41.14.056		*Demo Exist O&M Building*										
02 41 00.120		*Structure Demolition*										
n	5300	Demo O&M Building	8,870.00	SF		-	159,660			-	18.00 /SF	159,660
		02 41 00.120 Structure Demolition					*159,660*					*159,660*
		02.41.14.056 Demo Exist O&M Building			*0*	*0*	*159,660*		*0*	*0*		*159,660*
02.41.14.058		*Demo Building in New O&M Building Footprint*										
02 41 00.120		*Structure Demolition*										
n	5300	Demo Existing Building w/ paving	7,090.00	SF		-	106,350			-	15.00 /SF	106,350
		02 41 00.120 Structure Demolition					*106,350*					*106,350*
		02.41.14.058 Demo Building in New O&M Building Footprint			*0*	*0*	*106,350*		*0*	*0*	*15.00 /SF*	*106,350*
		7,090.00 SF										
02.41.14.060		*Demo Existing Gravidy Thickener Cover*										
02 41 00.120		*Structure Demolition*										
n	5300	Demo Cover	2,250.00	SF		-	27,000			-	12.00 /SF	27,000

AACE Classification Accuracy Range

Upper Range +50% **Lower Range -30%**

Central Kitsap Treatment Plant Solids Handling

Kitsap County

Detail Report - Direct Costs

Item		Description	Takeoff Qty		Labor Amount	Material Amount	Subcontract Amount	Name	Equipment Amount	Other Amount	Total Unit Cost	Total Amount
		02 41 00.120 Structure Demolition					*27,000*					*27,000*
		02.41.14.060 Demo Existing Gravidy Thickener Cover			*0*	*0*	*27,000*		*0*	*0*		*27,000*
02.41.14.062		*Demo existing in-plant pump station*										
02 41 00.120		*Structure Demolition*										
n	5300	Demo pump station	1.00	LS		-	21,000			-	21,000.00 /LS	21,000
		02 41 00.120 Structure Demolition					*21,000*					*21,000*
		02.41.14.062 Demo existing in-plant pump station			*0*	*0*	*21,000*		*0*	*0*		*21,000*
		DIVISION 02 EXISTING CONDITIONS			**9,585**	**5,204**	**452,510**		**4,584**	**0**		**471,882**
		149.684 Labor hours										
		149.684 Equipment hours										
		011 FACILITY OR BUILDING DEMOLITION			***9,585***	***5,204***	***452,510***		***4,584***	***0***	***15,729.397/CY***	***471,882***
		30.00 CY										
		149.684 Labor hours										
		149.684 Equipment hours										

124 BIOFILTER - Septage Receiving

DIVISION 03 CONCRETE

03.11.13.P015 *Biofilter - Base Slab - 18" Thick - 47' Wide x 56' Long*

03 11 13.506		*18" Slab on Grade*										
	3050	C.I.P. concrete forms, slab on grade, edge, wood, 7" to 12" high, 4 use, includes erecting, bracing, stripping and cleaning	309.00	sfca	1,268	377	-		-	-	5.322 /sfca	1,645
n	9015	C.I.P. concrete forms, bulkhead for slab on grade w/ keyway, up to 12", exp metal, includes erecting, bracing, stripping and cleaning	197.40	sfca	482	89	-		-	-	2.894 /sfca	571
n	2050	Reinforcing steel, unload and sort, add to base_SLAB ON GRADE	12.863	ton	463	-	-		268	-	56.816 /ton	731
	0600	Reinforcing steel, in place, slab on grade, #3 to #7, A615, grade 60, incl labor for accessories, excl material for accessories	12.863	ton	11,552	18,651	-		-	-	2,348.087 /ton	30,203
	2220	Reinforcing steel, crane cost for handling, 90 picks/day, up to 0.5 Ton/day	12.863	ton	1,321	-	-		767	-	162.331 /ton	2,088
	4650	Structural concrete, placing, slab on grade, pumped, over 6" thick, includes leveling (strike off) & consolidation, excludes material	147.00	cy	2,578	-	-		392	-	20.206 /cy	2,970
	4650	Structural concrete, placing, slab on grade, pumped, over 6" thick, includes leveling (strike off) & consolidation, excludes material	14.70	cy	258	-	-		39	-	20.206 /cy	297

Central Kitsap Treatment Plant Solids Handling

Kitsap County

Detail Report - Direct Costs

	Item	Description	Takeoff Qty		Labor Amount	Material Amount	Subcontract Amount	Subcontract Name	Equipment Amount	Other Amount	Total Unit Cost	Total Amount
03 11 13.506		*18" Slab on Grade*										
n	0725	Struct SLAB ON GRADE concrete,ready mix,normal wt,4500 psi,includes local aggregate,sand,portland cement and water,delivered, includes all additives	147.00	CY	-	33,810	-		-	-	230.00 /CY	33,810
n	0725	Struct SLAB ON GRADE concrete,ready mix,normal wt,4500 psi,includes local aggregate,sand,portland cement and water,delivered, includes all additives	14.70	cy	-	3,381	-		-	-	230.00 /cy	3,381
n	0255	Concrete finishing, floors, manual screed, bull float, machine float & steel trowel (walk-behind)_SOG	2,632.00	sf	1,930	-	-		142	-	0.787 /sf	2,072
n	0122	Control joint, concrete floor slab, sawcut in green concrete, 1" depth_SOG	131.60	lf	58	4	-		8	-	0.529 /lf	70
n	0215	Control joint, clean out control joint of debris_SOG	131.60	lf	10	-	-			-	0.073 /lf	10
n	0367	Control joint, joint sealant, polyurethane, 1/4" x 1/4" (308 LF/Gal)_SOG	263.20	lf	429	42	-		-	-	1.790 /lf	471
n	0310	Concrete surface treatment, curing, sprayed membrane compound_SOG	26.32	csf	209	196	-		-	-	15.408 /csf	406
	1200	Vapor retarders, building paper, polyethylene vapor barrier, standard, 10 mil (.010" thick)	26.32	sq	333	215	-		-	-	20.820 /sq	548
n	1310	Fill, gravel fill, compacted, under floor slabs, alternate pricing method, 12" deep_SOG	112.00	ecy	1,222	3,584	-		138	-	44.143 /ecy	4,944
n	1136	Hauling, excavated borrow material, loose cubic yards, 20 mile round trip, 0.4 loads/hour, 16.5 c.y. dump trailer, highway haulers, excludes loading	112.00	lcy	920	-	-		1,390	-	20.626 /lcy	2,310
		03 11 13.506 18" Slab on Grade			*23,033*	*60,349*			*3,145*		*588.614/CY*	*86,526*
		147.00 CY										
		391.069 Labor hours										
		74.996 Equipment hours										
		03.11.13.P015 Biofilter - Base Slab - 18" Thick - 47' Wide x 56' Long			*23,033*	*60,349*	*0*		*3,145*	*0*	*588.614/CY*	*86,526*
		147.00 CY										
		391.069 Labor hours										
		74.996 Equipment hours										
03.11.13.P020		*Biofilter - Walls - 230' LF x 7' High x 18" Thick*										
03 11 13.804		*12" CIP Wall*										
	0500	C.I.P. concrete forms, wall, wood bulkhead with 2 piece keyway, 1 use, includes erecting, bracing, stripping and cleaning	81.00	lf	842	275	-		-	-	13.793 /lf	1,117
	2550	C.I.P. concrete forms, wall, job built, plywood, over 8' to 16' high, 4 use, includes erecting, bracing, stripping and cleaning	3,220.00	sfca	22,450	3,188	-		-	-	7.962 /sfca	25,638
	5200	Chamfer strip, wood, 3/4" wide	161.00	lf	144	23	-		-	-	1.033 /lf	166
	1400	Tie cones, plastic, for coil tie system, for CIP wall forms, 1/2" bolt diameter x 1" setback length, includes material only	3.00	c	-	195	-		-	-	65.00 /c	195

AACE Classification Accuracy Range

Upper Range +50% **Lower Range -30%**

Central Kitsap Treatment Plant Solids Handling

Kitsap County

Detail Report - Direct Costs

	Item	Description	Takeoff Qty		Labor Amount	Material Amount	Subcontract Amount	Subcontract Name	Equipment Amount	Other Amount	Total Unit Cost	Total Amount
03 11 13.804		*12" CIP Wall*										
n	3010	Waterstop, rubber, center bulb, 1/4" thick x 6" wide_WALLS	311.00	lf	1,005	2,333	-		-	-	10.733 /lf	3,338
	0100	Splice rebar, standard, self-aligning type, taper threaded, #4 bars, includes holding rebar in place while splicing	66.00	ea	566	845	-		-	-	21.373 /ea	1,411
n	2020	Reinforcing steel, unload and sort, add to base_WALLS	6.00	ton	216	-	-		125	-	56.817 /ton	341
n	2214	Reinforcing steel, crane cost for handling, average, add_WALLS	6.00	ton	235	-	-		136	-	61.758 /ton	371
	0700	Reinforcing steel, in place, walls, #3 to #7, A615, grade 60, incl labor for accessories, excl material for accessories	6.00	ton	4,131	8,700	-		-	-	2,138.533 /ton	12,831
	5100	Structural concrete, placing, walls, pumped, 12" thick, includes leveling (strike off) & consolidation, excludes material	6.00	cy	177	-	-		27	-	33.983 /cy	204
	5100	Structural concrete, placing, walls, pumped, 12" thick, includes leveling (strike off) & consolidation, excludes material	60.00	cy	1,770	-	-		269	-	33.983 /cy	2,039
n	0525	Struct WALLS concrete,ready mix,normal wt,4500 psi,includes local aggregate,sand,portland cement and water,delivered, includes all additives	6.00	cy	-	1,380	-		-	-	230.00 /cy	1,380
n	0525	Struct WALLS concrete,ready mix,normal wt,4500 psi,includes local aggregate,sand,portland cement and water,delivered, includes all additives	60.00	CY	-	13,800	-		-	-	230.00 /CY	13,800
n	0210	Control joint, clean out control joint of debris_WALLS	81.00	lf	6	-	-			-	0.073 /lf	6
n	0366	Control joint, joint sealant, polyurethane, 1/4" x 1/4" (308 LF/Gal)_WALLS	81.00	lf	132	13	-		-	-	1.790 /lf	145
	0020	Concrete finishing, walls, includes breaking ties and patching voids	3,220.00	sf	2,624	129	-		-	-	0.855 /sf	2,753
	0050	Concrete finishing, walls, burlap rub with grout, includes breaking ties and patching voids	1,610.00	sf	1,574	64	-		-	-	1.018 /sf	1,639
		03 11 13.804 12" CIP Wall			*35,871*	*30,944*			*557*		*1,122.878/CY*	*67,373*
		60.00 CY										
		624.936 Labor hours										
		15.402 Equipment hours										
		03.11.13.P020 Biofilter - Walls - 230' LF x 7' High x 18" Thick			*35,871*	*30,944*	*0*		*557*	*0*		*67,373*
		624.936 Labor hours										
		15.402 Equipment hours										
		DIVISION 03 CONCRETE			**58,904**	**91,293**	**0**		**3,702**	**0**	**743.473/CY**	**153,899**
		207.00 CY										
		1,016.005 Labor hours										
		90.398 Equipment hours										

AACE Classification Accuracy Range

Upper Range +50% **Lower Range -30%**

Central Kitsap Treatment Plant Solids Handling

Kitsap County

Detail Report - Direct Costs

Item	Description	Takeoff Qty		Labor Amount	Material Amount	Subcontract Amount	Subcontract Name	Equipment Amount	Other Amount	Total Unit Cost	Total Amount
DIVISION 44	**POLLUTION CONTROL EQUIPMENT**										
44.31.21.005	*Inorganic biofilter*										
44 31 21.000	*Odor Control Equipment - Package Biofilter System*										
8999	Biofileter Packaged Equipment	1.00	EA	17,892	200,000	-		7,500	-	225,392.00 /EA	225,392
	44 31 21.000 Odor Control Equipment - Package Biofilter System			*17,892*	*200,000*			*7,500*		*225,392.00 /EA*	*225,392*
	1.00 EA										
	284.00 Labor hours										
	150.00 Equipment hours										
	44.31.21.005 Inorganic biofilter			*17,892*	*200,000*	*0*		*7,500*	*0*	*225,392.00 /EA*	*225,392*
	1.00 EA										
	284.00 Labor hours										
	150.00 Equipment hours										
44.31.21.010	*Odor Control Blowers*										
44 31 21.000	*Odor Control Equipment - Package Biofilter System*										
0200	Air and gas handling equipment, blower w/ control panel	2.00	EA	3,772	70,000	-		1,680	-	37,725.800 /EA	75,452
	44 31 21.000 Odor Control Equipment - Package Biofilter System			*3,772*	*70,000*			*1,680*		*37,725.800/EA*	*75,452*
	2.00 EA										
	56.00 Labor hours										
	56.00 Equipment hours										
	44.31.21.010 Odor Control Blowers			*3,772*	*70,000*	*0*		*1,680*	*0*	*37,725.800/EA*	*75,452*
	2.00 EA										
	56.00 Labor hours										
	56.00 Equipment hours										
	DIVISION 44 POLLUTION CONTROL EQUIPMENT			**21,664**	**270,000**	**0**		**9,180**	**0**	**100,281.20 /EA**	**300,844**
	3.00 EA										
	340.00 Labor hours										
	206.00 Equipment hours										
	124 BIOFILTER - Septage Receiving			***80,568***	***361,293***	***0***		***12,882***	***0***	***454,742.59 /LS***	***454,743***
	1.00 LS										
	1,356.005 Labor hours										

AACE Classification Accuracy Range

Upper Range +50% **Lower Range -30%**

Central Kitsap Treatment Plant Solids Handling

Kitsap County

Detail Report - Direct Costs

Item	Description	Takeoff Qty	Labor Amount	Material Amount	Subcontract Amount	Subcontract Name	Equipment Amount	Other Amount	Total Unit Cost	Total Amount
	124 BIOFILTER - Septage Receiving		***80,568***	***361,293***	***0***		***12,882***	***0***	***454,742.59 /LS***	***454,743***
	1.00 LS									
	1,356.005 Labor hours									
	296.398 Equipment hours									

125 BIOFILTER - Primary & Septage Thickening

DIVISION 03 **CONCRETE**

03.11.13.P015 *Biofilter - Base Slab - 18" Thick - 47' Wide x 56' Long*

03 11 13.506		*18" Slab on Grade*									
	3050	C.I.P. concrete forms, slab on grade, edge, wood, 7" to 12" high, 4 use, includes erecting, bracing, stripping and cleaning	309.00	sfca	1,268	377	-	-	-	5.322 /sfca	1,645
n	9015	C.I.P. concrete forms, bulkhead for slab on grade w/ keyway, up to 12", exp metal, includes erecting, bracing, stripping and cleaning	197.40	sfca	482	89	-	-	-	2.894 /sfca	571
n	2050	Reinforcing steel, unload and sort, add to base_SLAB ON GRADE	12.863	ton	463	-	-	268	-	56.816 /ton	731
	0600	Reinforcing steel, in place, slab on grade, #3 to #7, A615, grade 60, incl labor for accessories, excl material for accessories	12.863	ton	11,552	18,651	-	-	-	2,348.087 /ton	30,203
	2220	Reinforcing steel, crane cost for handling, 90 picks/day, up to 0.5 Ton/day	12.863	ton	1,321	-	-	767	-	162.331 /ton	2,088
	4650	Structural concrete, placing, slab on grade, pumped, over 6" thick, includes leveling (strike off) & consolidation, excludes material	14.70	cy	258	-	-	39	-	20.206 /cy	297
	4650	Structural concrete, placing, slab on grade, pumped, over 6" thick, includes leveling (strike off) & consolidation, excludes material	147.00	cy	2,578	-	-	392	-	20.206 /cy	2,970
n	0725	Struct SLAB ON GRADE concrete,ready mix,normal wt,4500 psi,includes local aggregate,sand,portland cement and water,delivered, includes all additives	147.00	CY	-	33,810	-	-	-	230.00 /CY	33,810
n	0725	Struct SLAB ON GRADE concrete,ready mix,normal wt,4500 psi,includes local aggregate,sand,portland cement and water,delivered, includes all additives	14.70	cy	-	3,381	-	-	-	230.00 /cy	3,381
n	0255	Concrete finishing, floors, manual screed, bull float, machine float & steel trowel (walk-behind)_SOG	2,632.00	sf	1,930	-	-	142	-	0.787 /sf	2,072
n	0122	Control joint, concrete floor slab, sawcut in green concrete, 1" depth_SOG	131.60	lf	58	4	-	8	-	0.529 /lf	70
n	0215	Control joint, clean out control joint of debris_SOG	131.60	lf	10	-	-		-	0.073 /lf	10
n	0367	Control joint, joint sealant, polyurethane, 1/4" x 1/4" (308 LF/Gal)_SOG	263.20	lf	429	42	-	-	-	1.790 /lf	471

AACE Classification Accuracy Range

Upper Range +50% **Lower Range -30%**

Central Kitsap Treatment Plant Solids Handling

Kitsap County

Detail Report - Direct Costs

	Item	Description	Takeoff Qty		Labor Amount	Material Amount	Subcontract Amount	Subcontract Name	Equipment Amount	Other Amount	Total Unit Cost	Total Amount
03 11 13.506		*18" Slab on Grade*										
n	0310	Concrete surface treatment, curing, sprayed membrane compound_SOG	26.32	csf	209	196	-		-	-	15.408 /csf	406
	1200	Vapor retarders, building paper, polyethylene vapor barrier, standard, 10 mil (.010" thick)	26.32	sq	333	215	-		-	-	20.820 /sq	548
n	1310	Fill, gravel fill, compacted, under floor slabs, alternate pricing method, 12" deep_SOG	112.00	ecy	1,222	3,584	-		138	-	44.143 /ecy	4,944
n	1136	Hauling, excavated borrow material, loose cubic yards, 20 mile round trip, 0.4 loads/hour, 16.5 c.y. dump trailer, highway haulers, excludes loading	112.00	lcy	920	-	-		1,390	-	20.626 /lcy	2,310
		03 11 13.506 18" Slab on Grade			*23,033*	*60,349*			*3,145*		*588.614/CY*	*86,526*
		147.00 CY										
		391.069 Labor hours										
		74.996 Equipment hours										
		03.11.13.P015 Biofilter - Base Slab - 18" Thick - 47' Wide x 56' Long			*23,033*	*60,349*	*0*		*3,145*	*0*	*588.614/CY*	*86,526*
		147.00 CY										
		391.069 Labor hours										
		74.996 Equipment hours										
03.11.13.P020		*Biofilter - Walls - 230' LF x 7' High x 18" Thick*										
03 11 13.804		*12" CIP Wall*										
	0500	C.I.P. concrete forms, wall, wood bulkhead with 2 piece keyway, 1 use, includes erecting, bracing, stripping and cleaning	81.00	lf	842	275	-		-	-	13.793 /lf	1,117
	2550	C.I.P. concrete forms, wall, job built, plywood, over 8' to 16' high, 4 use, includes erecting, bracing, stripping and cleaning	3,220.00	sfca	22,450	3,188	-		-	-	7.962 /sfca	25,638
	5200	Chamfer strip, wood, 3/4" wide	161.00	lf	144	23	-		-	-	1.033 /lf	166
	1400	Tie cones, plastic, for coil tie system, for CIP wall forms, 1/2" bolt diameter x 1" setback length, includes material only	3.00	c	-	195	-		-	-	65.00 /c	195
n	3010	Waterstop, rubber, center bulb, 1/4" thick x 6" wide_WALLS	311.00	lf	1,005	2,333	-		-	-	10.733 /lf	3,338
	0100	Splice rebar, standard, self-aligning type, taper threaded, #4 bars, includes holding rebar in place while splicing	66.00	ea	566	845	-		-	-	21.373 /ea	1,411
n	2020	Reinforcing steel, unload and sort, add to base_WALLS	6.00	ton	216	-	-		125	-	56.817 /ton	341
n	2214	Reinforcing steel, crane cost for handling, average, add_WALLS	6.00	ton	235	-	-		136	-	61.758 /ton	371
	0700	Reinforcing steel, in place, walls, #3 to #7, A615, grade 60, incl labor for accessories, excl material for accessories	6.00	ton	4,131	8,700	-		-	-	2,138.533 /ton	12,831
	5100	Structural concrete, placing, walls, pumped, 12" thick, includes leveling (strike off) & consolidation, excludes material	6.00	cy	177	-	-		27	-	33.983 /cy	204

Central Kitsap Treatment Plant Solids Handling

Kitsap County

Detail Report - Direct Costs

	Item	Description	Takeoff Qty		Labor Amount	Material Amount	Subcontract Amount	Subcontract Name	Equipment Amount	Other Amount	Total Unit Cost	Total Amount
03 11 13.804		*12" CIP Wall*										
	5100	Structural concrete, placing, walls, pumped, 12" thick, includes leveling (strike off) & consolidation, excludes material	60.00	cy	1,770	-	-		269	-	33.983 /cy	2,039
n	0525	Struct WALLS concrete,ready mix,normal wt,4500 psi,includes local aggregate,sand,portland cement and water,delivered, includes all additives	6.00	cy	-	1,380	-		-	-	230.00 /cy	1,380
n	0525	Struct WALLS concrete,ready mix,normal wt,4500 psi,includes local aggregate,sand,portland cement and water,delivered, includes all additives	60.00	CY	-	13,800	-		-	-	230.00 /CY	13,800
n	0210	Control joint, clean out control joint of debris_WALLS	81.00	lf	6	-	-			-	0.073 /lf	6
n	0366	Control joint, joint sealant, polyurethane, 1/4" x 1/4" (308 LF/Gal)_WALLS	81.00	lf	132	13	-		-	-	1.790 /lf	145
	0020	Concrete finishing, walls, includes breaking ties and patching voids	3,220.00	sf	2,624	129	-		-	-	0.855 /sf	2,753
	0050	Concrete finishing, walls, burlap rub with grout, includes breaking ties and patching voids	1,610.00	sf	1,574	64	-		-	-	1.018 /sf	1,639
		03 11 13.804 12" CIP Wall			*35,871*	*30,944*			*557*		*1,122.878/CY*	*67,373*
		60.00 CY										
		624.936 Labor hours										
		15.402 Equipment hours										
		03.11.13.P020 Biofilter - Walls - 230' LF x 7' High x 18" Thick			*35,871*	*30,944*	*0*		*557*	*0*		*67,373*
		624.936 Labor hours										
		15.402 Equipment hours										
		DIVISION 03 CONCRETE			**58,904**	**91,293**	**0**		**3,702**	**0**	**743.473/CY**	**153,899**
		207.00 CY										
		1,016.005 Labor hours										
		90.398 Equipment hours										

DIVISION 44 POLLUTION CONTROL EQUIPMENT

44.31.21.005 *Inorganic biofilter*

44 31 21.000		*Odor Control Equipment - Package Biofilter System*										
	8999	Biofileter Packaged Equipment	1.00	EA	17,892	200,000	-		7,500	-	225,392.00 /EA	225,392
		44 31 21.000 Odor Control Equipment - Package Biofilter System			*17,892*	*200,000*			*7,500*		*225,392.00 /EA*	*225,392*
		1.00 EA										
		284.00 Labor hours										
		150.00 Equipment hours										

AACE Classification Accuracy Range

Upper Range +50% **Lower Range -30%**

Central Kitsap Treatment Plant Solids Handling

Kitsap County

Detail Report - Direct Costs

Item	Description	Takeoff Qty		Labor Amount	Material Amount	Subcontract Amount	Name	Equipment Amount	Other Amount	Total Unit Cost	Total Amount
	44.31.21.005 Inorganic biofilter			*17,892*	*200,000*	*0*		*7,500*	*0*	*225,392.00 /EA*	*225,392*
	1.00 EA										
	284.00 Labor hours										
	150.00 Equipment hours										
44.31.21.010	*Odor Control Blowers*										
44 31 21.000	*Odor Control Equipment - Package Biofilter System*										
0200	Air and gas handling equipment, blower w/ control panel	2.00	EA	3,772	70,000	-		1,680	-	37,725.800 /EA	75,452
	44 31 21.000 Odor Control Equipment - Package Biofilter System			*3,772*	*70,000*			*1,680*		*37,725.800/EA*	*75,452*
	2.00 EA										
	56.00 Labor hours										
	56.00 Equipment hours										
	44.31.21.010 Odor Control Blowers			*3,772*	*70,000*	*0*		*1,680*	*0*	*37,725.800/EA*	*75,452*
	2.00 EA										
	56.00 Labor hours										
	56.00 Equipment hours										
	DIVISION 44 POLLUTION CONTROL EQUIPMENT			**21,664**	**270,000**	**0**		**9,180**	**0**	**100,281.20 /EA**	**300,844**
	3.00 EA										
	340.00 Labor hours										
	206.00 Equipment hours										
	125 BIOFILTER - Primary & Septage Thickening			***80,568***	***361,293***	***0***		***12,882***	***0***	***454,742.59 /LS***	***454,743***
	1.00 LS										
	1,356.005 Labor hours										
	296.398 Equipment hours										

126 BIOFILTER - Centrate Storage

DIVISION 03 **CONCRETE**

03.11.13.P015 *Biofilter - Base Slab - 18" Thick - 47' Wide x 56' Long*

03 11 13.506 *18" Slab on Grade*

Central Kitsap Treatment Plant Solids Handling

Kitsap County

Detail Report - Direct Costs

	Item	Description	Takeoff Qty		Labor Amount	Material Amount	Subcontract Amount	Subcontract Name	Equipment Amount	Other Amount	Total Unit Cost	Total Amount
03 11 13.506		*18" Slab on Grade*										
	3050	C.I.P. concrete forms, slab on grade, edge, wood, 7" to 12" high, 4 use, includes erecting, bracing, stripping and cleaning	309.00	sfca	1,268	377	-		-	-	5.322 /sfca	1,645
n	9015	C.I.P. concrete forms, bulkhead for slab on grade w/ keyway, up to 12", exp metal, includes erecting, bracing, stripping and cleaning	197.40	sfca	482	89	-		-	-	2.894 /sfca	571
n	2050	Reinforcing steel, unload and sort, add to base_SLAB ON GRADE	12.863	ton	463	-	-		268	-	56.816 /ton	731
	0600	Reinforcing steel, in place, slab on grade, #3 to #7, A615, grade 60, incl labor for accessories, excl material for accessories	12.863	ton	11,552	18,651	-		-	-	2,348.087 /ton	30,203
	2220	Reinforcing steel, crane cost for handling, 90 picks/day, up to 0.5 Ton/day	12.863	ton	1,321	-	-		767	-	162.331 /ton	2,088
	4650	Structural concrete, placing, slab on grade, pumped, over 6" thick, includes leveling (strike off) & consolidation, excludes material	14.70	cy	258	-	-		39	-	20.206 /cy	297
	4650	Structural concrete, placing, slab on grade, pumped, over 6" thick, includes leveling (strike off) & consolidation, excludes material	147.00	cy	2,578	-	-		392	-	20.206 /cy	2,970
n	0725	Struct SLAB ON GRADE concrete,ready mix,normal wt,4500 psi,includes local aggregate,sand,portland cement and water,delivered, includes all additives	147.00	CY	-	33,810	-		-	-	230.00 /CY	33,810
n	0725	Struct SLAB ON GRADE concrete,ready mix,normal wt,4500 psi,includes local aggregate,sand,portland cement and water,delivered, includes all additives	14.70	cy	-	3,381	-		-	-	230.00 /cy	3,381
n	0255	Concrete finishing, floors, manual screed, bull float, machine float & steel trowel (walk-behind)_SOG	2,632.00	sf	1,930	-	-		142	-	0.787 /sf	2,072
n	0122	Control joint, concrete floor slab, sawcut in green concrete, 1" depth_SOG	131.60	lf	58	4	-		8	-	0.529 /lf	70
n	0215	Control joint, clean out control joint of debris_SOG	131.60	lf	10	-	-			-	0.073 /lf	10
n	0367	Control joint, joint sealant, polyurethane, 1/4" x 1/4" (308 LF/Gal)_SOG	263.20	lf	429	42	-		-	-	1.790 /lf	471
n	0310	Concrete surface treatment, curing, sprayed membrane compound_SOG	26.32	csf	209	196	-		-	-	15.408 /csf	406
	1200	Vapor retarders, building paper, polyethylene vapor barrier, standard, 10 mil (.010" thick)	26.32	sq	333	215	-		-	-	20.820 /sq	548
n	1310	Fill, gravel fill, compacted, under floor slabs, alternate pricing method, 12" deep_SOG	112.00	ecy	1,222	3,584	-		138	-	44.143 /ecy	4,944
n	1136	Hauling, excavated borrow material, loose cubic yards, 20 mile round trip, 0.4 loads/hour, 16.5 c.y. dump trailer, highway haulers, excludes loading	112.00	lcy	920	-	-		1,390	-	20.626 /lcy	2,310
		03 11 13.506 18" Slab on Grade			*23,033*	*60,349*			*3,145*		*588.614/CY*	*86,526*

147.00 CY

391.069 Labor hours
74.996 Equipment hours

AACE Classification Accuracy Range

Upper Range +50% **Lower Range -30%**

Central Kitsap Treatment Plant Solids Handling

Kitsap County

Detail Report - Direct Costs

Item		Description	Takeoff Qty		Labor Amount	Material Amount	Subcontract Amount	Name	Equipment Amount	Other Amount	Total Unit Cost	Total Amount
		03.11.13.P015 Biofilter - Base Slab - 18" Thick - 47' Wide x 56' Long			*23,033*	*60,349*	*0*		*3,145*	*0*	*588.614/CY*	*86,526*
		147.00 CY										
		391.069 Labor hours 74.996 Equipment hours										
03.11.13.P020		*Biofilter - Walls - 230' LF x 7' High x 18" Thick*										
03 11 13.804		*12" CIP Wall*										
	0500	C.I.P. concrete forms, wall, wood bulkhead with 2 piece keyway, 1 use, includes erecting, bracing, stripping and cleaning	81.00	lf	842	275	-		-	-	13.793 /lf	1,117
	2550	C.I.P. concrete forms, wall, job built, plywood, over 8' to 16' high, 4 use, includes erecting, bracing, stripping and cleaning	3,220.00	sfca	22,450	3,188	-		-	-	7.962 /sfca	25,638
	5200	Chamfer strip, wood, 3/4" wide	161.00	lf	144	23	-		-	-	1.033 /lf	166
	1400	Tie cones, plastic, for coil tie system, for CIP wall forms, 1/2" bolt diameter x 1" setback length, includes material only	3.00	c	-	195	-		-	-	65.00 /c	195
n	3010	Waterstop, rubber, center bulb, 1/4" thick x 6" wide_WALLS	311.00	lf	1,005	2,333	-		-	-	10.733 /lf	3,338
	0100	Splice rebar, standard, self-aligning type, taper threaded, #4 bars, includes holding rebar in place while splicing	66.00	ea	566	845	-		-	-	21.373 /ea	1,411
n	2020	Reinforcing steel, unload and sort, add to base_WALLS	6.00	ton	216	-	-		125	-	56.817 /ton	341
n	2214	Reinforcing steel, crane cost for handling, average, add_WALLS	6.00	ton	235	-	-		136	-	61.758 /ton	371
	0700	Reinforcing steel, in place, walls, #3 to #7, A615, grade 60, incl labor for accessories, excl material for accessories	6.00	ton	4,131	8,700	-		-	-	2,138.533 /ton	12,831
	5100	Structural concrete, placing, walls, pumped, 12" thick, includes leveling (strike off) & consolidation, excludes material	6.00	cy	177	-	-		27	-	33.983 /cy	204
	5100	Structural concrete, placing, walls, pumped, 12" thick, includes leveling (strike off) & consolidation, excludes material	60.00	cy	1,770	-	-		269	-	33.983 /cy	2,039
n	0525	Struct WALLS concrete,ready mix,normal wt,4500 psi,includes local aggregate,sand,portland cement and water,delivered, includes all additives	60.00	CY	-	13,800	-		-	-	230.00 /CY	13,800
n	0525	Struct WALLS concrete,ready mix,normal wt,4500 psi,includes local aggregate,sand,portland cement and water,delivered, includes all additives	6.00	cy	-	1,380	-		-	-	230.00 /cy	1,380
n	0210	Control joint, clean out control joint of debris_WALLS	81.00	lf	6	-	-			-	0.073 /lf	6
n	0366	Control joint, joint sealant, polyurethane, 1/4" x 1/4" (308 LF/Gal)_WALLS	81.00	lf	132	13	-		-	-	1.790 /lf	145
	0020	Concrete finishing, walls, includes breaking ties and patching voids	3,220.00	sf	2,624	129	-		-	-	0.855 /sf	2,753

Central Kitsap Treatment Plant Solids Handling

Kitsap County

Detail Report - Direct Costs

Item	Description	Takeoff Qty		Labor Amount	Material Amount	Subcontract Amount	Subcontract Name	Equipment Amount	Other Amount	Total Unit Cost	Total Amount
03 11 13.804	*12" CIP Wall*										
0050	Concrete finishing, walls, burlap rub with grout, includes breaking ties and patching voids	1,610.00	sf	1,574	64	-		-	-	1.018 /sf	1,639
	03 11 13.804 12" CIP Wall			*35,871*	*30,944*			*557*		*1,122.878/CY*	*67,373*
	60.00 CY										
	624.936 Labor hours										
	15.402 Equipment hours										
	03.11.13.P020 Biofilter - Walls - 230' LF x 7' High x 18" Thick			*35,871*	*30,944*	*0*		*557*	*0*		*67,373*
	624.936 Labor hours										
	15.402 Equipment hours										
	DIVISION 03 CONCRETE			**58,904**	**91,293**	**0**		**3,702**	**0**	**743.473/CY**	**153,899**
	207.00 CY										
	1,016.005 Labor hours										
	90.398 Equipment hours										
DIVISION 44	**POLLUTION CONTROL EQUIPMENT**										
44.31.21.005	*Inorganic biofilter*										
44 31 21.000	*Odor Control Equipment - Package Biofilter System*										
8999	Biofileter Packaged Equipment	1.00	EA	17,892	200,000	-		7,500	-	225,392.00 /EA	225,392
	44 31 21.000 Odor Control Equipment - Package Biofilter System			*17,892*	*200,000*			*7,500*		*225,392.00 /EA*	*225,392*
	1.00 EA										
	284.00 Labor hours										
	150.00 Equipment hours										
	44.31.21.005 Inorganic biofilter			*17,892*	*200,000*	*0*		*7,500*	*0*	*225,392.00 /EA*	*225,392*
	1.00 EA										
	284.00 Labor hours										
	150.00 Equipment hours										
44.31.21.010	*Odor Control Blowers*										
44 31 21.000	*Odor Control Equipment - Package Biofilter System*										
0200	Air and gas handling equipment, blower w/ control panel	2.00	EA	3,772	70,000	-		1,680	-	37,725.800 /EA	75,452
	44 31 21.000 Odor Control Equipment - Package Biofilter System			*3,772*	*70,000*			*1,680*		*37,725.800/EA*	*75,452*
	2.00 EA										
	56.00 Labor hours										
	56.00 Equipment hours										

Central Kitsap Treatment Plant Solids Handling

Kitsap County

Detail Report - Direct Costs

Item	Description	Takeoff Qty	Labor Amount	Material Amount	Subcontract Amount	Subcontract Name	Equipment Amount	Other Amount	Total Unit Cost	Total Amount
	44.31.21.010 Odor Control Blowers		*3,772*	*70,000*	*0*		*1,680*	*0*	*37,725.800/EA*	*75,452*
	2.00 EA									
	56.00 Labor hours									
	56.00 Equipment hours									
	DIVISION 44 POLLUTION CONTROL EQUIPMENT		**21,664**	**270,000**	**0**		**9,180**	**0**	**100,281.20 /EA**	**300,844**
	3.00 EA									
	340.00 Labor hours									
	206.00 Equipment hours									
	126 BIOFILTER - Centrate Storage		***80,568***	***361,293***	***0***		***12,882***	***0***	***454,742.59 /LS***	***454,743***
	1.00 LS									
	1,356.005 Labor hours									
	296.398 Equipment hours									

162 CANOPY - PARKING & STORAGE

DIVISION 03 CONCRETE

03.11.13.P010 *O & M Building - Parking Canopy Slab - 12" Thick - 5,860 SF*

03 11 13.504		*12" Slab on Grade*									
	3050	C.I.P. concrete forms, slab on grade, edge, wood, 7" to 12" high, 4 use, includes erecting, bracing, stripping and cleaning	306.20	sfca	1,256	374	-	-	-	5.322 /sfca	1,630
n	9015	C.I.P. concrete forms, bulkhead for slab on grade w/ keyway, up to 12", exp metal, includes erecting, bracing, stripping and cleaning	292.995	sfca	716	132	-	-	-	2.894 /sfca	848
n	2050	Reinforcing steel, unload and sort, add to base_SLAB ON GRADE	19.075	ton	686	-	-	398	-	56.816 /ton	1,084
	0600	Reinforcing steel, in place, slab on grade, #3 to #7, A615, grade 60, incl labor for accessories, excl material for accessories	19.075	ton	17,131	27,659	-	-	-	2,348.087 /ton	44,790
	2220	Reinforcing steel, crane cost for handling, 90 picks/day, up to 0.5 Ton/day	19.075	ton	1,960	-	-	1,137	-	162.331 /ton	3,096
	4650	Structural concrete, placing, slab on grade, pumped, over 6" thick, includes leveling (strike off) & consolidation, excludes material	21.80	cy	382	-	-	58	-	20.206 /cy	440
	4650	Structural concrete, placing, slab on grade, pumped, over 6" thick, includes leveling (strike off) & consolidation, excludes material	218.00	cy	3,823	-	-	582	-	20.206 /cy	4,405

Central Kitsap Treatment Plant Solids Handling

Kitsap County

Detail Report - Direct Costs

	Item	Description	Takeoff Qty		Labor Amount	Material Amount	Subcontract Amount	Subcontract Name	Equipment Amount	Other Amount	Total Unit Cost	Total Amount
03 11 13.504		*12" Slab on Grade*										
n	0725	Struct SLAB ON GRADE concrete,ready mix,normal wt,4500 psi,includes local aggregate,sand,portland cement and water,delivered, includes all additives	21.80	cy	-	5,014	-		-	-	230.00 /cy	5,014
n	0725	Struct SLAB ON GRADE concrete,ready mix,normal wt,4500 psi,includes local aggregate,sand,portland cement and water,delivered, includes all additives	218.00	CY	-	50,140	-		-	-	230.00 /CY	50,140
n	0255	Concrete finishing, floors, manual screed, bull float, machine float & steel trowel (walk-behind)_SOG	5,859.903	sf	4,297	-	-		316	-	0.787 /sf	4,613
n	0122	Control joint, concrete floor slab, sawcut in green concrete, 1" depth_SOG	292.995	lf	129	9	-		17	-	0.529 /lf	155
n	0215	Control joint, clean out control joint of debris_SOG	292.995	lf	21	-	-			-	0.073 /lf	21
n	0367	Control joint, joint sealant, polyurethane, 1/4" x 1/4" (308 LF/Gal)_SOG	585.99	lf	955	94	-		-	-	1.790 /lf	1,049
n	0310	Concrete surface treatment, curing, sprayed membrane compound_SOG	58.599	csf	466	437	-		-	-	15.408 /csf	903
	1200	Vapor retarders, building paper, polyethylene vapor barrier, standard, 10 mil (.010" thick)	58.599	sq	742	478	-		-	-	20.820 /sq	1,220
n	1310	Fill, gravel fill, compacted, under floor slabs, alternate pricing method, 12" deep_SOG	250.00	ecy	2,727	8,000	-		309	-	44.143 /ecy	11,036
n	1136	Hauling, excavated borrow material, loose cubic yards, 20 mile round trip, 0.4 loads/hour, 16.5 c.y. dump trailer, highway haulers, excludes loading	250.00	lcy	2,054	-	-		3,103	-	20.626 /lcy	5,156
		03 11 13.504 12" Slab on Grade			*37,346*	*92,335*			*5,920*		*622.020/CY*	*135,600*
		218.00 CY										
		641.114 Labor hours										
		148.639 Equipment hours										
		03.11.13.P010 O & M Building - Parking Canopy Slab - 12" Thick - 5,860 SF			*37,346*	*92,335*	*0*		*5,920*	*0*	*622.020/CY*	*135,600*
		218.00 CY										
		641.114 Labor hours										
		148.639 Equipment hours										
		DIVISION 03 CONCRETE			**37,346**	**92,335**	**0**		**5,920**	**0**	**622.020/CY**	**135,600**
		218.00 CY										
		641.114 Labor hours										
		148.639 Equipment hours										

DIVISION 05 METALS

05.50.00.P005 *O & M Building - Parking Metal Canopy - 5,860 SF*

05 50 00.500 *Fabricated, Metal Canopy*

AACE Classification Accuracy Range

Upper Range +50% **Lower Range -30%**

Central Kitsap Treatment Plant Solids Handling

Kitsap County

Detail Report - Direct Costs

	Item	Description	Takeoff Qty		Labor Amount	Material Amount	Subcontract Amount	Name	Equipment Amount	Other Amount	Total Unit Cost	Total Amount
05 50 00.500		*Fabricated, Metal Canopy*										
n	1000	O & M Building - Parking Metal Canopy - 5,860 SF	5,860.00	BSF	-	-	586,000		-	-	100.00 /BSF	586,000
		05 50 00.500 Fabricated, Metal Canopy					*586,000*				*100.00 /BSF*	*586,000*
		5,860.00 BSF										
		05.50.00.P005 O & M Building - Parking Metal Canopy - 5,860 SF			*0*	*0*	*586,000*		*0*	*0*	*100.00 /BSF*	*586,000*
		5,860.00 BSF										
		DIVISION 05 METALS			**0**	**0**	**586,000**		**0**	**0**	**586,000.00 /LS**	**586,000**
		1.00 LS										
		162 CANOPY - PARKING & STORAGE			***37,346***	***92,335***	***586,000***		***5,920***	***0***	***123.140/BSF***	***721,600***
		5,860.00 BSF										
		641.114 Labor hours										
		148.639 Equipment hours										

411 IN-PLANT PUMP STATION

DIVISION 03 CONCRETE

03 11 13.305.05 *Elevated Vault Slab, 16" Thick x 75 SF*

03 11 13.305		*16" Elevated Slab*										
	3050	C.I.P. concrete forms, slab on grade, edge, wood, 7" to 12" high, 4 use, includes erecting, bracing, stripping and cleaning	46.175	sfca	189	56	-		-	-	5.322 /sfca	246
n	9015	C.I.P. concrete forms, bulkhead for slab on grade w/ keyway, up to 12", exp metal, includes erecting, bracing, stripping and cleaning	4.998	sfca	12	2	-		-	-	2.893 /sfca	14
n	2050	Reinforcing steel, unload and sort, add to base_SLAB ON GRADE	0.35	ton	13	-	-		7	-	56.80 /ton	20
	0600	Reinforcing steel, in place, slab on grade, #3 to #7, A615, grade 60, incl labor for accessories, excl material for accessories	0.35	ton	314	508	-		-	-	2,348.086 /ton	822
	2220	Reinforcing steel, crane cost for handling, 90 picks/day, up to 0.5 Ton/day	0.35	ton	36	-	-		21	-	162.34 /ton	57
	4650	Structural concrete, placing, slab on grade, pumped, over 6" thick, includes leveling (strike off) & consolidation, excludes material	0.40	cy	7	-	-		1	-	20.20 /cy	8
	4650	Structural concrete, placing, slab on grade, pumped, over 6" thick, includes leveling (strike off) & consolidation, excludes material	4.00	cy	70	-	-		11	-	20.205 /cy	81

Central Kitsap Treatment Plant Solids Handling

Kitsap County

Detail Report - Direct Costs

	Item	Description	Takeoff Qty		Labor Amount	Material Amount	Subcontract Amount	Subcontract Name	Equipment Amount	Other Amount	Total Unit Cost	Total Amount
03 11 13.305		*16" Elevated Slab*										
n	0725	Struct SLAB ON GRADE concrete,ready mix,normal wt,4500 psi,includes local aggregate,sand,portland cement and water,delivered, includes all additives	0.40	cy	-	92	-		-	-	230.00 /cy	92
n	0725	Struct SLAB ON GRADE concrete,ready mix,normal wt,4500 psi,includes local aggregate,sand,portland cement and water,delivered, includes all additives	4.00	CY	-	920	-		-	-	230.00 /CY	920
n	0255	Concrete finishing, floors, manual screed, bull float, machine float & steel trowel (walk-behind)_SOG	74.996	sf	55	-	-		4	-	0.787 /sf	59
n	0122	Control joint, concrete floor slab, sawcut in green concrete, 1" depth_SOG	3.75	lf	2	0	-		0	-	0.528 /lf	2
n	0215	Control joint, clean out control joint of debris_SOG	3.75	lf	0	-	-			-	0.072 /lf	0
n	0367	Control joint, joint sealant, polyurethane, 1/4" x 1/4" (308 LF/Gal)_SOG	7.50	lf	12	1	-		-	-	1.789 /lf	13
n	0310	Concrete surface treatment, curing, sprayed membrane compound_SOG	0.75	csf	6	6	-		-	-	15.413 /csf	12
	1200	Vapor retarders, building paper, polyethylene vapor barrier, standard, 10 mil (.010" thick)	0.75	sq	10	6	-		-	-	20.81 /sq	16
n	1310	Fill, gravel fill, compacted, under floor slabs, alternate pricing method, 12" deep_SOG	3.00	ecy	33	96	-		4	-	44.143 /ecy	132
n	1136	Hauling, excavated borrow material, loose cubic yards, 20 mile round trip, 0.4 loads/hour, 16.5 c.y. dump trailer, highway haulers, excludes loading	3.00	lcy	25	-	-		37	-	20.623 /lcy	62
		03 11 13.305 16" Elevated Slab			*784*	*1,687*			*85*		*638.953/CY*	*2,556*
		4.00 CY										
		13.457 Labor hours										
		2.041 Equipment hours										
		03 11 13.305.05 Elevated Vault Slab, 16" Thick x 75 SF			*784*	*1,687*	*0*		*85*	*0*	*638.953/CY*	*2,556*
		4.00 CY										
		13.457 Labor hours										
		2.041 Equipment hours										
03 11 13.305.10		*Elevated Slab, 16" Thick x 78 SF*										
03 11 13.305		*16" Elevated Slab*										
	3050	C.I.P. concrete forms, slab on grade, edge, wood, 7" to 12" high, 4 use, includes erecting, bracing, stripping and cleaning	47.092	sfca	193	57	-		-	-	5.322 /sfca	251
n	9015	C.I.P. concrete forms, bulkhead for slab on grade w/ keyway, up to 12", exp metal, includes erecting, bracing, stripping and cleaning	5.199	sfca	13	2	-		-	-	2.893 /sfca	15
n	2050	Reinforcing steel, unload and sort, add to base_SLAB ON GRADE	0.35	ton	13	-	-		7	-	56.80 /ton	20

Central Kitsap Treatment Plant Solids Handling

Kitsap County

Detail Report - Direct Costs

	Item	Description	Takeoff Qty		Labor Amount	Material Amount	Subcontract Amount	Subcontract Name	Equipment Amount	Other Amount	Total Unit Cost	Total Amount
03 11 13.305		*16" Elevated Slab*										
	0600	Reinforcing steel, in place, slab on grade, #3 to #7, A615, grade 60, incl labor for accessories, excl material for accessories	0.35	ton	314	508	-		-	-	2,348.086 /ton	822
	2220	Reinforcing steel, crane cost for handling, 90 picks/day, up to 0.5 Ton/day	0.35	ton	36	-	-		21	-	162.34 /ton	57
	4650	Structural concrete, placing, slab on grade, pumped, over 6" thick, includes leveling (strike off) & consolidation, excludes material	0.40	cy	7	-	-		1	-	20.20 /cy	8
	4650	Structural concrete, placing, slab on grade, pumped, over 6" thick, includes leveling (strike off) & consolidation, excludes material	4.00	cy	70	-	-		11	-	20.205 /cy	81
n	0725	Struct SLAB ON GRADE concrete,ready mix,normal wt,4500 psi,includes local aggregate,sand,portland cement and water,delivered, includes all additives	4.00	CY	-	920	-		-	-	230.00 /CY	920
n	0725	Struct SLAB ON GRADE concrete,ready mix,normal wt,4500 psi,includes local aggregate,sand,portland cement and water,delivered, includes all additives	0.40	cy	-	92	-		-	-	230.00 /cy	92
n	0255	Concrete finishing, floors, manual screed, bull float, machine float & steel trowel (walk-behind)_SOG	78.004	sf	57	-	-		4	-	0.787 /sf	61
n	0122	Control joint, concrete floor slab, sawcut in green concrete, 1" depth_SOG	3.90	lf	2	0	-		0	-	0.53 /lf	2
n	0215	Control joint, clean out control joint of debris_SOG	3.90	lf	0	-	-			-	0.074 /lf	0
n	0367	Control joint, joint sealant, polyurethane, 1/4" x 1/4" (308 LF/Gal)_SOG	7.80	lf	13	1	-		-	-	1.79 /lf	14
n	0310	Concrete surface treatment, curing, sprayed membrane compound_SOG	0.78	csf	6	6	-		-	-	15.41 /csf	12
	1200	Vapor retarders, building paper, polyethylene vapor barrier, standard, 10 mil (.010" thick)	0.78	sq	10	6	-		-	-	20.821 /sq	16
n	1310	Fill, gravel fill, compacted, under floor slabs, alternate pricing method, 12" deep_SOG	3.00	ecy	33	96	-		4	-	44.143 /ecy	132
n	1136	Hauling, excavated borrow material, loose cubic yards, 20 mile round trip, 0.4 loads/hour, 16.5 c.y. dump trailer, highway haulers, excludes loading	3.00	lcy	25	-	-		37	-	20.623 /lcy	62
		03 11 13.305 16" Elevated Slab			*791*	*1,689*			*85*		*641.348/CY*	*2,565*
		4.00 CY										
		13.598 Labor hours										
		2.056 Equipment hours										
		03 11 13.305.10 Elevated Slab, 16" Thick x 78 SF			*791*	*1,689*	*0*		*85*	*0*	*641.348/CY*	*2,565*
		4.00 CY										
		13.598 Labor hours										
		2.056 Equipment hours										

03 11 13.503.05 *Vault Foundation Slab, 10" Thick x 75 SF*

Central Kitsap Treatment Plant Solids Handling

Kitsap County

Detail Report - Direct Costs

	Item	Description	Takeoff Qty		Labor Amount	Material Amount	Subcontract Amount	Subcontract Name	Equipment Amount	Other Amount	Total Unit Cost	Total Amount
03 11 13.503		*10" Slab on Grade*										
	3050	C.I.P. concrete forms, slab on grade, edge, wood, 7" to 12" high, 4 use, includes erecting, bracing, stripping and cleaning	28.855	sfca	118	35	-		-	-	5.322 /sfca	154
n	9015	C.I.P. concrete forms, bulkhead for slab on grade w/ keyway, up to 12", exp metal, includes erecting, bracing, stripping and cleaning	3.124	sfca	8	1	-		-	-	2.894 /sfca	9
n	2050	Reinforcing steel, unload and sort, add to base_SLAB ON GRADE	0.263	ton	9	-	-		5	-	56.844 /ton	15
	0600	Reinforcing steel, in place, slab on grade, #3 to #7, A615, grade 60, incl labor for accessories, excl material for accessories	0.263	ton	236	381	-		-	-	2,348.10 /ton	618
	2220	Reinforcing steel, crane cost for handling, 90 picks/day, up to 0.5 Ton/day	0.263	ton	27	-	-		16	-	162.32 /ton	43
	4650	Structural concrete, placing, slab on grade, pumped, over 6" thick, includes leveling (strike off) & consolidation, excludes material	0.30	cy	5	-	-		1	-	20.20 /cy	6
	4650	Structural concrete, placing, slab on grade, pumped, over 6" thick, includes leveling (strike off) & consolidation, excludes material	3.00	cy	53	-	-		8	-	20.207 /cy	61
n	0725	Struct SLAB ON GRADE concrete,ready mix,normal wt,4500 psi,includes local aggregate,sand,portland cement and water,delivered, includes all additives	0.30	cy	-	69	-		-	-	230.00 /cy	69
n	0725	Struct SLAB ON GRADE concrete,ready mix,normal wt,4500 psi,includes local aggregate,sand,portland cement and water,delivered, includes all additives	3.00	CY	-	690	-		-	-	230.00 /CY	690
n	0255	Concrete finishing, floors, manual screed, bull float, machine float & steel trowel (walk-behind)_SOG	74.996	sf	55	-	-		4	-	0.787 /sf	59
n	0122	Control joint, concrete floor slab, sawcut in green concrete, 1" depth_SOG	3.75	lf	2	0	-		0	-	0.528 /lf	2
n	0215	Control joint, clean out control joint of debris_SOG	3.75	lf	0	-	-			-	0.072 /lf	0
n	0367	Control joint, joint sealant, polyurethane, 1/4" x 1/4" (308 LF/Gal)_SOG	7.50	lf	12	1	-		-	-	1.789 /lf	13
n	0310	Concrete surface treatment, curing, sprayed membrane compound_SOG	0.75	csf	6	6	-		-	-	15.413 /csf	12
	1200	Vapor retarders, building paper, polyethylene vapor barrier, standard, 10 mil (.010" thick)	0.75	sq	10	6	-		-	-	20.81 /sq	16
n	1310	Fill, gravel fill, compacted, under floor slabs, alternate pricing method, 12" deep_SOG	3.00	ecy	33	96	-		4	-	44.143 /ecy	132
n	1136	Hauling, excavated borrow material, loose cubic yards, 20 mile round trip, 0.4 loads/hour, 16.5 c.y. dump trailer, highway haulers, excludes loading	3.00	lcy	25	-	-		37	-	20.623 /lcy	62
		03 11 13.503 10" Slab on Grade			*599*	*1,286*			*75*		*653.22 /CY*	*1,960*

3.00 CY

10.322 Labor hours
1.872 Equipment hours

AACE Classification Accuracy Range

Upper Range +50% **Lower Range -30%**

Central Kitsap Treatment Plant Solids Handling

Kitsap County

Detail Report - Direct Costs

Item		Description	Takeoff Qty		Labor Amount	Material Amount	Subcontract Amount	Name	Equipment Amount	Other Amount	Total Unit Cost	Total Amount
		03 11 13.503.05 Vault Foundation Slab, 10" Thick x 75 SF			*599*	*1,286*	*0*		*75*	*0*	*653.22 /CY*	*1,960*
		3.00 CY										
		10.322 Labor hours										
		1.872 Equipment hours										
03 11 13.505.15		*Foundation Slab, 16" Thick x 79 SF*										
03 11 13.505		*16" Slab on Grade*										
	3050	C.I.P. concrete forms, slab on grade, edge, wood, 7" to 12" high, 4 use, includes erecting, bracing, stripping and cleaning	47.391	sfca	194	58	-		-	-	5.322 /sfca	252
n	9015	C.I.P. concrete forms, bulkhead for slab on grade w/ keyway, up to 12", exp metal, includes erecting, bracing, stripping and cleaning	5.265	sfca	13	2	-		-	-	2.895 /sfca	15
n	2050	Reinforcing steel, unload and sort, add to base_SLAB ON GRADE	0.35	ton	13	-	-		7	-	56.80 /ton	20
	0600	Reinforcing steel, in place, slab on grade, #3 to #7, A615, grade 60, incl labor for accessories, excl material for accessories	0.35	ton	314	508	-		-	-	2,348.086 /ton	822
	2220	Reinforcing steel, crane cost for handling, 90 picks/day, up to 0.5 Ton/day	0.35	ton	36	-	-		21	-	162.34 /ton	57
	4650	Structural concrete, placing, slab on grade, pumped, over 6" thick, includes leveling (strike off) & consolidation, excludes material	0.40	cy	7	-	-		1	-	20.20 /cy	8
	4650	Structural concrete, placing, slab on grade, pumped, over 6" thick, includes leveling (strike off) & consolidation, excludes material	4.00	cy	70	-	-		11	-	20.205 /cy	81
n	0725	Struct SLAB ON GRADE concrete,ready mix,normal wt,4500 psi,includes local aggregate,sand,portland cement and water,delivered, includes all additives	4.00	CY	-	920	-		-	-	230.00 /CY	920
n	0725	Struct SLAB ON GRADE concrete,ready mix,normal wt,4500 psi,includes local aggregate,sand,portland cement and water,delivered, includes all additives	0.40	cy	-	92	-		-	-	230.00 /cy	92
n	0255	Concrete finishing, floors, manual screed, bull float, machine float & steel trowel (walk-behind)_SOG	78.997	sf	58	-	-		4	-	0.787 /sf	62
n	0122	Control joint, concrete floor slab, sawcut in green concrete, 1" depth_SOG	3.95	lf	2	0	-		0	-	0.53 /lf	2
n	0215	Control joint, clean out control joint of debris_SOG	3.95	lf	0	-	-			-	0.073 /lf	0
n	0367	Control joint, joint sealant, polyurethane, 1/4" x 1/4" (308 LF/Gal)_SOG	7.90	lf	13	1	-		-	-	1.789 /lf	14
n	0310	Concrete surface treatment, curing, sprayed membrane compound_SOG	0.79	csf	6	6	-		-	-	15.42 /csf	12
	1200	Vapor retarders, building paper, polyethylene vapor barrier, standard, 10 mil (.010" thick)	0.79	sq	10	6	-		-	-	20.82 /sq	16
n	1310	Fill, gravel fill, compacted, under floor slabs, alternate pricing method, 12" deep_SOG	3.00	ecy	33	96	-		4	-	44.143 /ecy	132

Central Kitsap Treatment Plant Solids Handling

Kitsap County

Detail Report - Direct Costs

	Item	Description	Takeoff Qty		Labor Amount	Material Amount	Subcontract Amount	Subcontract Name	Equipment Amount	Other Amount	Total Unit Cost	Total Amount
03 11 13.505		*16" Slab on Grade*										
n	1136	Hauling, excavated borrow material, loose cubic yards, 20 mile round trip, 0.4 loads/hour, 16.5 c.y. dump trailer, highway haulers, excludes loading	3.00	lcy	25	-	-		37	-	20.623 /lcy	62
		03 11 13.505 16" Slab on Grade			*794*	*1,689*			*85*		*642.13 /CY*	*2,569*
		4.00 CY										
		13.644 Labor hours										
		2.061 Equipment hours										
		03 11 13.505.15 Foundation Slab, 16" Thick x 79 SF			*794*	*1,689*	*0*		*85*	*0*	*642.13 /CY*	*2,569*
		4.00 CY										
		13.644 Labor hours										
		2.061 Equipment hours										
03 11 13.801.05		*Concrete Wall, 14'-5" High x 8" Wide x 27 LF*										
03 11 13.801		*08" CIP Wall*										
	0500	C.I.P. concrete forms, wall, wood bulkhead with 2 piece keyway, 1 use, includes erecting, bracing, stripping and cleaning	20.00	lf	208	68	-		-	-	13.793 /lf	276
	2550	C.I.P. concrete forms, wall, job built, plywood, over 8' to 16' high, 4 use, includes erecting, bracing, stripping and cleaning	778.518	sfca	5,428	771	-		-	-	7.962 /sfca	6,199
	5200	Chamfer strip, wood, 3/4" wide	39.00	lf	35	5	-		-	-	1.033 /lf	40
	1400	Tie cones, plastic, for coil tie system, for CIP wall forms, 1/2" bolt diameter x 1" setback length, includes material only	1.00	c	-	65	-		-	-	65.00 /c	65
n	3010	Waterstop, rubber, center bulb, 1/4" thick x 6" wide_WALLS	47.00	lf	152	353	-		-	-	10.733 /lf	504
	0100	Splice rebar, standard, self-aligning type, taper threaded, #4 bars, includes holding rebar in place while splicing	11.00	ea	94	141	-		-	-	21.373 /ea	235
n	2020	Reinforcing steel, unload and sort, add to base_WALLS	1.00	ton	36	-	-		21	-	56.82 /ton	57
n	2214	Reinforcing steel, crane cost for handling, average, add_WALLS	1.00	ton	39	-	-		23	-	61.75 /ton	62
	0700	Reinforcing steel, in place, walls, #3 to #7, A615, grade 60, incl labor for accessories, excl material for accessories	1.00	ton	689	1,450	-		-	-	2,138.530 /ton	2,139
	5100	Structural concrete, placing, walls, pumped, 12" thick, includes leveling (strike off) & consolidation, excludes material	1.00	cy	29	-	-		4	-	33.98 /cy	34
	5100	Structural concrete, placing, walls, pumped, 12" thick, includes leveling (strike off) & consolidation, excludes material	10.00	cy	295	-	-		45	-	33.983 /cy	340
n	0525	Struct WALLS concrete,ready mix,normal wt,4500 psi,includes local aggregate,sand,portland cement and water,delivered, includes all additives	1.00	cy	-	230	-		-	-	230.00 /cy	230

Central Kitsap Treatment Plant Solids Handling

Kitsap County

Detail Report - Direct Costs

	Item	Description	Takeoff Qty		Labor Amount	Material Amount	Subcontract Amount	Name	Equipment Amount	Other Amount	Total Unit Cost	Total Amount
03 11 13.801		*08" CIP Wall*										
n	0525	Struct WALLS concrete,ready mix,normal wt,4500 psi,includes local aggregate,sand,portland cement and water,delivered, includes all additives	10.00	CY	-	2,300	-		-	-	230.00 /CY	2,300
n	0210	Control joint, clean out control joint of debris_WALLS	20.00	lf	1	-	-			-	0.073 /lf	1
n	0366	Control joint, joint sealant, polyurethane, 1/4" x 1/4" (308 LF/Gal)_WALLS	20.00	lf	33	3	-		-	-	1.790 /lf	36
	0020	Concrete finishing, walls, includes breaking ties and patching voids	778.518	sf	634	31	-		-	-	0.855 /sf	665
	0050	Concrete finishing, walls, burlap rub with grout, includes breaking ties and patching voids	389.259	sf	381	16	-		-	-	1.018 /sf	396
		03 11 13.801 08" CIP Wall			*8,054*	*5,432*			*93*		*1,357.92 /CY*	*13,579*
		10.00 CY										
		140.576 Labor hours										
		2.567 Equipment hours										
		03 11 13.801.05 Concrete Wall, 14'-5" High x 8" Wide x 27 LF			*8,054*	*5,432*	*0*		*93*	*0*	*1,357.92 /CY*	*13,579*
		10.00 CY										
		140.576 Labor hours										
		2.567 Equipment hours										
03 11 13.803.15		*Vault Concrete Wall, 8' High x 10 Thick x 31 LF*										
03 11 13.803		*10" CIP Wall*										
	0500	C.I.P. concrete forms, wall, wood bulkhead with 2 piece keyway, 1 use, includes erecting, bracing, stripping and cleaning	13.00	lf	135	44	-		-	-	13.792 /lf	179
	2550	C.I.P. concrete forms, wall, job built, plywood, over 8' to 16' high, 4 use, includes erecting, bracing, stripping and cleaning	496.00	sfca	3,458	491	-		-	-	7.962 /sfca	3,949
	5200	Chamfer strip, wood, 3/4" wide	25.00	lf	22	4	-		-	-	1.033 /lf	26
	1400	Tie cones, plastic, for coil tie system, for CIP wall forms, 1/2" bolt diameter x 1" setback length, includes material only	1.00	c	-	65	-		-	-	65.00 /c	65
n	3010	Waterstop, rubber, center bulb, 1/4" thick x 6" wide_WALLS	44.00	lf	142	330	-		-	-	10.733 /lf	472
	0100	Splice rebar, standard, self-aligning type, taper threaded, #4 bars, includes holding rebar in place while splicing	8.80	ea	75	113	-		-	-	21.373 /ea	188
n	2020	Reinforcing steel, unload and sort, add to base_WALLS	0.80	ton	29	-	-		17	-	56.81 /ton	45
n	2214	Reinforcing steel, crane cost for handling, average, add_WALLS	0.80	ton	31	-	-		18	-	61.76 /ton	49
	0700	Reinforcing steel, in place, walls, #3 to #7, A615, grade 60, incl labor for accessories, excl material for accessories	0.80	ton	551	1,160	-		-	-	2,138.54 /ton	1,711

Central Kitsap Treatment Plant Solids Handling

Kitsap County

Detail Report - Direct Costs

	Item	Description	Takeoff Qty		Labor Amount	Material Amount	Subcontract Amount	Name	Equipment Amount	Other Amount	Total Unit Cost	Total Amount
03 11 13.803		*10" CIP Wall*										
	5100	Structural concrete, placing, walls, pumped, 12" thick, includes leveling (strike off) & consolidation, excludes material	0.80	cy	24	-	-		4	-	33.99 /cy	27
	5100	Structural concrete, placing, walls, pumped, 12" thick, includes leveling (strike off) & consolidation, excludes material	8.00	cy	236	-	-		36	-	33.983 /cy	272
n	0525	Struct WALLS concrete,ready mix,normal wt,4500 psi,includes local aggregate,sand,portland cement and water,delivered, includes all additives	0.80	cy	-	184	-		-	-	230.00 /cy	184
n	0525	Struct WALLS concrete,ready mix,normal wt,4500 psi,includes local aggregate,sand,portland cement and water,delivered, includes all additives	8.00	CY	-	1,840	-		-	-	230.00 /CY	1,840
n	0210	Control joint, clean out control joint of debris_WALLS	13.00	lf	1	-	-			-	0.073 /lf	1
n	0366	Control joint, joint sealant, polyurethane, 1/4" x 1/4" (308 LF/Gal)_WALLS	13.00	lf	21	2	-		-	-	1.79 /lf	23
	0020	Concrete finishing, walls, includes breaking ties and patching voids	496.00	sf	404	20	-		-	-	0.855 /sf	424
	0050	Concrete finishing, walls, burlap rub with grout, includes breaking ties and patching voids	248.00	sf	242	10	-		-	-	1.018 /sf	252
		03 11 13.803 10" CIP Wall			*5,373*	*4,262*			*74*		*1,213.630/CY*	*9,709*
		8.00 CY										
		93.666 Labor hours										
		2.054 Equipment hours										
		03 11 13.803.15 Vault Concrete Wall, 8' High x 10 Thick x 31 LF			*5,373*	*4,262*	*0*		*74*	*0*	*1,213.630/CY*	*9,709*
		8.00 CY										
		93.666 Labor hours										
		2.054 Equipment hours										
		DIVISION 03 CONCRETE			**16,394**	**16,046**	**0**		**498**	**0**	**998.110/CY**	**32,938**
		33.00 CY										
		285.263 Labor hours										
		12.650 Equipment hours										

DIVISION 08 OPENINGS

08 31 00.005.05 *Access Hatch 3' x 3'*

08 31 00.005		*Access Door - Single Leaf - 3' x 3'*										
	0050	Doors, specialty, access, floor, industrial, steel, 300 psf L.L., single leaf, 3' x 3', 300 lb	1.00	EA	188	1,400	-		-	-	1,587.78 /EA	1,588

AACE Classification Accuracy Range

Upper Range +50% **Lower Range -30%**

Central Kitsap Treatment Plant Solids Handling

Kitsap County

Detail Report - Direct Costs

Item		Description	Takeoff Qty		Labor Amount	Material Amount	Subcontract Amount	Subcontract Name	Equipment Amount	Other Amount	Total Unit Cost	Total Amount
		08 31 00.005 Access Door - Single Leaf - 3' x 3'			*188*	*1,400*					*1,587.78 /EA*	*1,588*
		1.00 EA										
		2.909 Labor hours										
		08 31 00.005.05 Access Hatch 3' x 3'			*188*	*1,400*	*0*		*0*	*0*	*1,587.78 /EA*	*1,588*
		1.00 EA										
		2.909 Labor hours										
08 31 00.015.05		*Access Hatch 5' x 5'*										
08 31 00.015		*Access Door - Single Leaf - 5' x 5'*										
	0350	Doors, specialty, access, floor, industrial, steel, 300 psf L.L., double leaf, 5' x 5', 645 lb	1.00	EA	230	3,150	-		-	-	3,379.51 /EA	3,380
		08 31 00.015 Access Door - Single Leaf - 5' x 5'			*230*	*3,150*					*3,379.51 /EA*	*3,380*
		1.00 EA										
		3.556 Labor hours										
		08 31 00.015.05 Access Hatch 5' x 5'			*230*	*3,150*	*0*		*0*	*0*	*3,379.51 /EA*	*3,380*
		1.00 EA										
		3.556 Labor hours										
		DIVISION 08 OPENINGS			**417**	**4,550**	**0**		**0**	**0**	**2,483.645/EA**	**4,967**
		2.00 EA										
		6.465 Labor hours										
DIVISION 31		**EARTHWORK**										
31.23.10.P005		*Excavation, Backfill, and Haul Off-Site*										
31 23 10.000		*Excavation, Backfill, and Haul Off-Site*										
n	6260	Strt excvt for minor strtr,bank measr,for sprd and mat ftngs,elvtr pits,and small bldng fndtn,sandy clay loam,2 cy bucket,machin excvtn,hydrlc backhoe	500.00	CY	2,103	-	-		2,343	-	8.891 /CY	4,445
	4010	Backfill, structural, sandy clay & loam, 200 H.P. dozer, 50' haul, from existing stockpile, excludes compaction	335.00	CY	95	-	-		220	-	0.942 /CY	316
	4060	Borrow, common earth, 1-1/2 C.Y. bucket, loading and/or spreading, front end loader, wheel-mounted	335.00	CY	239	2,680	-		156	-	9.179 /CY	3,075
n	0560	Hauling,excavated borrow material,loose cubic yards,20 mile round trip,0.4 load/hr,base wide rate,12 cy truck,highway haulers,excludes loading	185.00	CY	2,104	-	-		2,891	-	27.002 /CY	4,995
	0400	Compaction, structural, select fill, 8" lifts, sheepsfoot or wobbly wheel roller	335.00	CY	155	-	-		320	-	1.418 /CY	475

Central Kitsap Treatment Plant Solids Handling

Kitsap County

Detail Report - Direct Costs

Item		Description	Takeoff Qty		Labor Amount	Material Amount	Subcontract Amount	Subcontract Name	Equipment Amount	Other Amount	Total Unit Cost	Total Amount
		31 23 10.000 Excavation, Backfill, and Haul Off-Site			*4,697*	*2,680*			*5,930*		*7.874/CY*	*13,307*
		1,690.00 CY										
		83.461 Labor hours										
		62.118 Equipment hours										
		31.23.10.P005 Excavation, Backfill, and Haul Off-Site			*4,697*	*2,680*	*0*		*5,930*	*0*	*7.874/CY*	*13,307*
		1,690.00 CY										
		83.461 Labor hours										
		62.118 Equipment hours										
31.23.19.P005		*Well Point Detwatering - 2 Months*										
31 23 19.020		*Dewatering - Wellpoint*										
n	1000	Wellpoints,complete installation,2"wellpoints,5'oc, 200'long header,8"diameter,includes one month operation,equipment rental,fuel and removal system	100.00	hdr	31,840	14,700	-		-	-	465.40 /hdr	46,540
	1100	Wellpoints, each additional month, 2" wellpoints, 5' O.C., 200' long header, 8" diameter, includes operation, equipment rental, and fuel	100.00	hdr	22,770	6,900	-		-	-	296.700 /hdr	29,670
		31 23 19.020 Dewatering - Wellpoint			*54,610*	*21,600*					*38,104.980/MO*	*76,210*
		2.00 MO										
		914.740 Labor hours										
		31.23.19.P005 Well Point Detwatering - 2 Months			*54,610*	*21,600*	*0*		*0*	*0*	*38,104.980/MO*	*76,210*
		2.00 MO										
		914.740 Labor hours										
		DIVISION 31 EARTHWORK			**59,307**	**24,280**	**0**		**5,930**	**0**	**52.968/CY**	**89,517**
		1,690.00 CY										
		998.201 Labor hours										
		62.118 Equipment hours										
DIVISION 33		**UTILITIES (BURIED PIPE AND VALVES)**										
33.32.13.005		*Plant wastewater - in plant pumps*										
33 32 13.000		*Package Sewage Pumping Station*										
	2510	Packaged utility lift station, packaged sewage lift station, 500,000 GPD, excludes fencing or external piping	1.00	EA	43,979	257,500	-		15,986	-	317,464.790 /EA	317,465
	2510	Pump Station - Valve vault w/ access hatch	1.00	EA	3,728	16,000	-		1,914	-	21,642.07 /EA	21,642

Central Kitsap Treatment Plant Solids Handling

Kitsap County

Detail Report - Direct Costs

Item	Description	Takeoff Qty		Labor Amount	Material Amount	Subcontract Amount	Subcontract Name	Equipment Amount	Other Amount	Total Unit Cost	Total Amount
	33 32 13.000 Package Sewage Pumping Station			*47,707*	*273,500*			*17,900*		*169,553.43 /EA*	*339,107*
	2.00 EA										
	742.211 Labor hours										
	321.158 Equipment hours										
	33.32.13.005 Plant wastewater - in plant pumps			*47,707*	*273,500*	*0*		*17,900*	*0*	*169,553.43 /EA*	*339,107*
	2.00 EA										
	742.211 Labor hours										
	321.158 Equipment hours										
	DIVISION 33 UTILITIES (BURIED PIPE AND VALVES)			**47,707**	**273,500**	**0**		**17,900**	**0**	**16,955.343/LF**	**339,107**
	20.00 LF										
	742.211 Labor hours										
	321.158 Equipment hours										
DIVISION 43	**PROCESS GAS & LIQUID HANDLING, PURIFICATION & STORAGE EQUIPMENT**										
32.24.11.P005	*In-Plant Pump Station - Subermible Pumps - 10 HP*										
43 24 11.000	*Pumping Equipment - Submersible Pump*										
9000	Submersible Pump_10 HP	2.00	EA	2,819	70,000	-		1,086	398	37,151.40 /EA	74,303
9950	Stainless Steel Guide Rails	30.00	LF	1,096	360	-				48.515 /LF	1,455
9999	Vendor Testing and Startup	2.00	day	73		4,500				2,286.525 /day	4,573
	43 24 11.000 Pumping Equipment - Submersible Pump			*3,988*	*70,360*	*4,500*		*1,086*	*398*	*40,165.65 /EA*	*80,331*
	2.00 EA										
	66.00 Labor hours										
	12.00 Equipment hours										
	32.24.11.P005 In-Plant Pump Station - Subermible Pumps - 10 HP			*3,988*	*70,360*	*4,500*		*1,086*	*398*	*40,165.65 /EA*	*80,331*
	2.00 EA										
	66.00 Labor hours										
	12.00 Equipment hours										
	DIVISION 43 PROCESS GAS & LIQUID HANDLING, PURIFICATION & STORAGE EQUIPMENT			**3,988**	**70,360**	**4,500**		**1,086**	**398**	**40,165.65 /EA**	**80,331**
	2.00 EA										
	66.00 Labor hours										
	12.00 Equipment hours										

Central Kitsap Treatment Plant Solids Handling
Kitsap County
Detail Report - Direct Costs

Item	Description	Takeoff Qty		Labor Amount	Material Amount	Subcontract Amount	Name	Equipment Amount	Other Amount	Total Unit Cost	Total Amount
	411 IN-PLANT PUMP STATION			***127,813***	***388,736***	***4,500***		***25,414***	***398***	***546,859.66 /LS***	***546,860***
	1.00 LS										
	2,098.139 Labor hours										
	407.926 Equipment hours										
	466 O&M BUILDING										
DIVISION 03	**CONCRETE**										
03 41 33.000.05	*Double Tee Roof, 21,040 SF*										
03 41 33.000	*Precast and Prestressed Concrete*										
0300	Precast tees, double, floor, 30' span, prestressed	21,040.00	SF	20,277	299,820	-		10,581	-	15.717 /SF	330,678
	03 41 33.000 Precast and Prestressed Concrete			*20,277*	*299,820*			*10,581*		*15.717/SF*	*330,678*
	21,040.00 SF										
	315.600 Labor hours										
	35.067 Equipment hours										
	03 41 33.000.05 Double Tee Roof, 21,040 SF			*20,277*	*299,820*	*0*		*10,581*	*0*	*15.717/SF*	*330,678*
	21,040.00 SF										
	315.600 Labor hours										
	35.067 Equipment hours										
03.11.13.P005	*O & M Building Base Slab - 12" Thick - 21,040 SF*										
03 11 13.504	*12" Slab on Grade*										
3050	C.I.P. concrete forms, slab on grade, edge, wood, 7" to 12" high, 4 use, includes erecting, bracing, stripping and cleaning	580.200	sfca	2,380	708	-		-	-	5.322 /sfca	3,088
n 9015	C.I.P. concrete forms, bulkhead for slab on grade w/ keyway, up to 12", exp metal, includes erecting, bracing, stripping and cleaning	1,051.975	sfca	2,571	473	-		-	-	2.894 /sfca	3,044
n 2050	Reinforcing steel, unload and sort, add to base_SLAB ON GRADE	68.25	ton	2,454	-	-		1,424	-	56.816 /ton	3,878
0600	Reinforcing steel, in place, slab on grade, #3 to #7, A615, grade 60, incl labor for accessories, excl material for accessories	68.25	ton	61,294	98,963	-		-	-	2,348.087 /ton	160,257
2220	Reinforcing steel, crane cost for handling, 90 picks/day, up to 0.5 Ton/day	68.25	ton	7,011	-	-		4,068	-	162.331 /ton	11,079
4650	Structural concrete, placing, slab on grade, pumped, over 6" thick, includes leveling (strike off) & consolidation, excludes material	780.00	cy	13,679	-	-		2,081	-	20.206 /cy	15,761
4650	Structural concrete, placing, slab on grade, pumped, over 6" thick, includes leveling (strike off) & consolidation, excludes material	78.00	cy	1,368	-	-		208	-	20.206 /cy	1,576

Central Kitsap Treatment Plant Solids Handling

Kitsap County

Detail Report - Direct Costs

Item		Description	Takeoff Qty		Labor Amount	Material Amount	Subcontract Amount	Subcontract Name	Equipment Amount	Other Amount	Total Unit Cost	Total Amount
03 11 13.504		*12" Slab on Grade*										
n	0725	Struct SLAB ON GRADE concrete,ready mix,normal wt,4500 psi,includes local aggregate,sand,portland cement and water,delivered, includes all additives	78.00	cy	-	17,940	-		-	-	230.00 /cy	17,940
n	0725	Struct SLAB ON GRADE concrete,ready mix,normal wt,4500 psi,includes local aggregate,sand,portland cement and water,delivered, includes all additives	780.00	CY	-	179,400	-		-	-	230.00 /CY	179,400
n	0255	Concrete finishing, floors, manual screed, bull float, machine float & steel trowel (walk-behind)_SOG	21,040.00	BSF	15,429	-	-		1,134	-	0.787 /BSF	16,563
n	0122	Control joint, concrete floor slab, sawcut in green concrete, 1" depth_SOG	1,051.975	lf	463	32	-		62	-	0.529 /lf	557
n	0215	Control joint, clean out control joint of debris_SOG	1,051.975	lf	77	-	-			-	0.073 /lf	77
n	0367	Control joint, joint sealant, polyurethane, 1/4" x 1/4" (308 LF/Gal)_SOG	2,103.950	lf	3,429	337	-		-	-	1.790 /lf	3,765
n	0310	Concrete surface treatment, curing, sprayed membrane compound_SOG	210.395	csf	1,674	1,567	-		-	-	15.408 /csf	3,242
	1200	Vapor retarders, building paper, polyethylene vapor barrier, standard, 10 mil (.010" thick)	210.395	sq	2,666	1,715	-		-	-	20.820 /sq	4,380
n	1310	Fill, gravel fill, compacted, under floor slabs, alternate pricing method, 12" deep_SOG	896.00	ecy	9,773	28,672	-		1,108	-	44.143 /ecy	39,552
n	1136	Hauling, excavated borrow material, loose cubic yards, 20 mile round trip, 0.4 loads/hour, 16.5 c.y. dump trailer, highway haulers, excludes loading	896.00	lcy	7,361	-	-		11,120	-	20.626 /lcy	18,481
		03 11 13.504 12" Slab on Grade			*131,628*	*329,806*			*21,205*		*618.769/CY*	*482,640*
		780.00 CY										
		2,258.247 Labor hours 532.686 Equipment hours										
		03.11.13.P005 O & M Building Base Slab - 12" Thick - 21,040 SF			*131,628*	*329,806*	*0*		*21,205*	*0*	*618.769/CY*	*482,640*
		780.00 CY										
		2,258.247 Labor hours 532.686 Equipment hours										
		DIVISION 03 CONCRETE			**151,906**	**629,626**	**0**		**31,786**	**0**	**1,042.716/CY**	**813,318**
		780.00 CY										
		2,573.847 Labor hours 567.753 Equipment hours										

DIVISION 04 MASONRY

04.22.00.P005 *O & M Building - Split Face CMU - 18' High x 720' - Exterior Walls*

04 22 00.212 *Concrete Masonry Unit (12" CMU) - Exterior*

AACE Classification Accuracy Range

Upper Range +50% **Lower Range -30%**

Central Kitsap Treatment Plant Solids Handling

Kitsap County

Detail Report - Direct Costs

Item		Description	Takeoff Qty		Labor Amount	Material Amount	Subcontract Amount	Name	Equipment Amount	Other Amount	Total Unit Cost	Total Amount
04 22 00.212		*Concrete Masonry Unit (12" CMU) - Exterior*										
	0090	Scaffolding, steel tubular, regular, labor only to erect & dismantle, building exterior, wall face, 6'-4" x 5' frames, 1 to 5 stories, excludes planks	130.00	csf	22,854	-	-		-	-	175.80 /csf	22,854
	0906	Scaffolding, steel tubular, regular, rent/month only for complete system for face of walls, 6' -4" x 5' frames, excludes planks	130.00	csf	-	10,790	-		-	-	83.00 /csf	10,790
	2850	Scaffolding, steel tubular, regular, accessory, plank, rent/mo, 2" x 10" x 16' long	15.00	ea	-	151	-		-	-	10.05 /ea	151
	0060	Grout, bond beams and lintels, 8" deep, 12" thick, 0.30 CF per LF, pumped, excludes blockwork	720.00	lf	1,166	1,145	-		139	-	3.402 /lf	2,449
	0350	Grout, concrete masonry unit (CMU) cores, 12" thick, 0.422 CF/SF, pumped, excludes blockwork	12,960.00	sf	34,101	29,030	-		4,060	-	5.185 /sf	67,191
	0020	Masonry reinforcing bars, #5 and #6 reinforcing steel bars, placed horizontally, ASTM A615	2,379.168	lb	1,368	1,737	-		-	-	1.305 /lb	3,105
	0060	Masonry reinforcing bars, #5 and #6 reinforcing steel bars, placed vertically, ASTM A615	16,059.384	lb	11,365	11,723	-		-	-	1.438 /lb	23,088
n	0150	Concrete block,bond beam,normal weight,2000 psi,12"x8"x16",includes mortar,excludes scaffolding,horizontal reinforcing,vertical reinforcing and grout	720.00	lf	3,529	4,392	-		-	-	11.001 /lf	7,921
	6250	Concrete block, decorative, split face or scored split face, 2000 psi, 12" x 8" x 16", excludes scaffolding, grout and reinforcing	1,296.00	sf	11,998	8,359	-		-	-	15.708 /sf	20,357
	6250	Concrete block, decorative, split face or scored split face, 2000 psi, 12" x 8" x 16", excludes scaffolding, grout and reinforcing	12,960.00	SF	119,981	83,592	-		-	-	15.708 /SF	203,573
	6550	Concrete block, decorative, split face or scored split face, 12" thick, for special deeper colors, add	12,960.00	sf	-	11,275	-		-	-	0.87 /sf	11,275
	6550	Concrete block, decorative, split face or scored split face, 12" thick, for special deeper colors, add	1,296.00	sf	-	1,128	-		-	-	0.87 /sf	1,128
		04 22 00.212 Concrete Masonry Unit (12" CMU) - Exterior			*206,362*	*163,322*			*4,199*		*28.849/SF*	*373,882*
		12,960.00 SF										
		3,883.765 Labor hours										
		167.538 Equipment hours										
		04.22.00.P005 O & M Building - Split Face CMU - 18' High x 720' - Exterior Walls			*206,362*	*163,322*	*0*		*4,199*	*0*	*28.849/SF*	*373,882*
		12,960.00 SF										
		3,883.765 Labor hours										
		167.538 Equipment hours										
04.22.00.P010		*O & M Building - Split Face CMU - 26' High x 391' LF - Shop Area*										
04 22 00.212		*Concrete Masonry Unit (12" CMU) - Exterior*										
	0090	Scaffolding, steel tubular, regular, labor only to erect & dismantle, building exterior, wall face, 6'-4" x 5' frames, 1 to 5 stories, excludes planks	102.00	csf	17,932	-	-		-	-	175.80 /csf	17,932

AACE Classification Accuracy Range

Upper Range +50% **Lower Range -30%**

Central Kitsap Treatment Plant Solids Handling

Kitsap County

Detail Report - Direct Costs

	Item	Description	Takeoff Qty		Labor Amount	Material Amount	Subcontract Amount	Subcontract Name	Equipment Amount	Other Amount	Total Unit Cost	Total Amount
04 22 00.212		*Concrete Masonry Unit (12" CMU) - Exterior*										
	0906	Scaffolding, steel tubular, regular, rent/month only for complete system for face of walls, 6' -4" x 5' frames, excludes planks	102.00	csf	-	8,466	-		-	-	83.00 /csf	8,466
	2850	Scaffolding, steel tubular, regular, accessory, plank, rent/mo, 2" x 10" x 16' long	15.00	ea	-	151	-		-	-	10.05 /ea	151
	0060	Grout, bond beams and lintels, 8" deep, 12" thick, 0.30 CF per LF, pumped, excludes blockwork	391.00	lf	633	622	-		75	-	3.402 /lf	1,330
	0350	Grout, concrete masonry unit (CMU) cores, 12" thick, 0.422 CF/SF, pumped, excludes blockwork	10,166.00	sf	26,749	22,772	-		3,185	-	5.185 /sf	52,706
	0020	Masonry reinforcing bars, #5 and #6 reinforcing steel bars, placed horizontally, ASTM A615	1,292.02	lb	743	943	-		-	-	1.305 /lb	1,686
	0060	Masonry reinforcing bars, #5 and #6 reinforcing steel bars, placed vertically, ASTM A615	12,597.199	lb	8,915	9,196	-		-	-	1.438 /lb	18,111
n	0150	Concrete block,bond beam,normal weight,2000 psi,12"x8"x16",includes mortar,excludes scaffolding,horizontal reinforcing,vertical reinforcing and grout	391.00	lf	1,916	2,385	-		-	-	11.001 /lf	4,301
	6250	Concrete block, decorative, split face or scored split face, 2000 psi, 12" x 8" x 16", excludes scaffolding, grout and reinforcing	10,166.00	SF	94,115	65,571	-		-	-	15.708 /SF	159,685
	6250	Concrete block, decorative, split face or scored split face, 2000 psi, 12" x 8" x 16", excludes scaffolding, grout and reinforcing	1,017.00	sf	9,415	6,560	-		-	-	15.708 /sf	15,975
	6550	Concrete block, decorative, split face or scored split face, 12" thick, for special deeper colors, add	10,166.00	sf	-	8,844	-		-	-	0.87 /sf	8,844
	6550	Concrete block, decorative, split face or scored split face, 12" thick, for special deeper colors, add	1,017.00	sf	-	885	-		-	-	0.87 /sf	885
		04 22 00.212 Concrete Masonry Unit (12" CMU) - Exterior			*160,418*	*126,394*			*3,260*		*28.534/SF*	*290,072*
		10,166.00 SF										
		3,019.183 Labor hours										
		130.083 Equipment hours										
		04.22.00.P010 O & M Building - Split Face CMU - 26' High x 391' LF - Shop Area			*160,418*	*126,394*	*0*		*3,260*	*0*	*28.534/SF*	*290,072*
		10,166.00 SF										
		3,019.183 Labor hours										
		130.083 Equipment hours										
		DIVISION 04 MASONRY			**366,780**	**289,716**	**0**		**7,458**	**0**		**663,954**
		6,902.947 Labor hours										
		297.621 Equipment hours										

DIVISION 05 METALS

05 12 00.000.05 *Structural Frame Allowance*

05 12 00.000 *Structural Steel*

AACE Classification Accuracy Range

Upper Range +50% **Lower Range -30%**

Central Kitsap Treatment Plant Solids Handling

Kitsap County

Detail Report - Direct Costs

Item		Description	Takeoff Qty		Labor Amount	Material Amount	Subcontract Amount	Subcontract Name	Equipment Amount	Other Amount	Total Unit Cost	Total Amount
05 12 00.000		*Structural Steel*										
n	0310	Structural steel project,apartment,nursing home,etc,100-ton project,3 6 stories,a992 steel,shop fabricated,incl shop primer,bolted connections	112,488.129	lb	28,801	203,491	-		10,919	-	2.162 /lb	243,211
	0400	Sprayed fireproofing, cementitious, normal density, beams, 1 hour rated, 1-3/8" thick, excluding canvas protection	2,040.00	SF	1,593	1,625	-		273	-	1.711 /SF	3,491
		05 12 00.000 Structural Steel			*30,395*	*205,116*			*11,191*			*246,702*
		478.138 Labor hours 99.982 Equipment hours										
		05 12 00.000.05 Structural Frame Allowance			*30,395*	*205,116*	*0*		*11,191*	*0*	*120.932/SF*	*246,702*
		2,040.00 SF										
		478.138 Labor hours 99.982 Equipment hours										
		DIVISION 05 METALS			**30,395**	**205,116**	**0**		**11,191**	**0**		**246,702**
		478.138 Labor hours 99.982 Equipment hours										

DIVISION 07 THERMAL, MOISTURE PROTECTION

07.51.00.P005 O & M Building - PVC Built-Up Roofing

07 51 00.000		*Built-Up Roofing System (BUR)*										
	0800	Aluminum coping, stock units, for 12" wall, excludes scaffolding	667.00	lf	8,336	1,849	-		-	-	15.27 /lf	10,185
	2780	2" x 8" miscellaneous wood blocking, to steel construction, per M.B.F.	2.669	mbf	7,150	3,443	-		-	-	3,968.846 /mbf	10,593
	2700	Elastomeric sheet waterproofing, polyvinyl chloride sheets, plain, 30 mils thick	21,040.00	sf	37,331	5,801	-		-	-	2.05 /sf	43,132
	1725	Polyisocyanurate insulation, for roof decks, 2" thick, 2#/CF density, fastening excluded	21,040.00	SF	7,330	18,970	-		-	-	1.25 /SF	26,300
	1745	Polyisocyanurate insulation, for roof decks, 3" thick, 2#/CF density, fastening excluded	21,040.00	sf	8,064	28,335	-		-	-	1.73 /sf	36,399
	0825	Asphalt shingles, #30 felt underlayment	210.00	sq	1,800	2,192	-		-	-	19.010 /sq	3,992
	0100	Sheet metal flashing, aluminum, flexible, mill finish, .032" thick, including up to 4 bends	2,321.00	sf	7,962	11,813	-		-	-	8.520 /sf	19,775
		07 51 00.000 Built-Up Roofing System (BUR)			*77,973*	*72,403*					*7.147/SF*	*150,376*
		21,040.00 SF										
		1,488.407 Labor hours										
		07.51.00.P005 O & M Building - PVC Built-Up Roofing			*77,973*	*72,403*	*0*		*0*	*0*	*7.147/SF*	*150,376*
		21,040.00 SF										
		1,488.407 Labor hours										

Central Kitsap Treatment Plant Solids Handling

Kitsap County

Detail Report - Direct Costs

Item	Description	Takeoff Qty		Labor Amount	Material Amount	Subcontract Amount	Subcontract Name	Equipment Amount	Other Amount	Total Unit Cost	Total Amount
	DIVISION 07 THERMAL, MOISTURE PROTECTION			**77,973**	**72,403**	**0**		**0**	**0**	**7.147/SF**	**150,376**
	21,040.00 SF										
	1,488.407 Labor hours										
DIVISION 08	**OPENINGS**										
08.11.16.P005	*O & M Building - Exterior Doors - 6' x 7'*										
08 11 16.060	*Aluminum Doors & Frames (6070)*										
3620	Frames, steel, knock down, hollow metal, 14 gauge, up to 5-3/4" D, 7'-0" H, 6'-0" W, double	3.00	EA	234	705	-		-	-	313.133 /EA	939
5100	Doors, aluminum, commercial entrance, flush panel doors, pair of, 3'-0" x 7'-0", incl. hinges, push/pull, deadlock, cylinder, threshold, excl. glazing	3.00	pr	1,549	5,850	-		-	-	2,466.40 /pr	7,399
3000	Door hardware, panic device, narrow stile, mortise bar, exit only	6.00	ea	703	3,600	-		-	-	717.20 /ea	4,303
0011	Thresholds, aluminum, 3' long door saddles	18.00	lf	176	217	-		-	-	21.817 /lf	393
1430	Door hardware, hinges, full mortise, high frequency, brass base, US10, 4-1/2" x 4-1/2"	9.00	pr	-	545	-		-	-	60.50 /pr	545
1200	Paints & coatings, exterior, door & frame, one side, flush, 1 coat, 3' x 7'	6.00	ea	140	14	-		-	-	25.655 /ea	154
	08 11 16.060 Aluminum Doors & Frames (6070)			*2,803*	*10,930*					*4,577.643/EA*	*13,733*
	3.00 EA										
	45.824 Labor hours										
	08.11.16.P005 O & M Building - Exterior Doors - 6' x 7'			*2,803*	*10,930*	*0*		*0*	*0*	*4,577.643/EA*	*13,733*
	3.00 EA										
	45.824 Labor hours										
08.11.16.P010	*O & M Building - Interior Doors - 6' x 7'*										
08 11 16.060	*Aluminum Doors & Frames (6070)*										
3620	Frames, steel, knock down, hollow metal, 14 gauge, up to 5-3/4" D, 7'-0" H, 6'-0" W, double	12.00	EA	938	2,820	-		-	-	313.133 /EA	3,758
5100	Doors, aluminum, commercial entrance, flush panel doors, pair of, 3'-0" x 7'-0", incl. hinges, push/pull, deadlock, cylinder, threshold, excl. glazing	12.00	pr	6,197	19,500	-		-	-	2,141.40 /pr	25,697
3000	Door hardware, panic device, narrow stile, mortise bar, exit only	24.00	ea	2,813	14,400	-		-	-	717.20 /ea	17,213
0011	Thresholds, aluminum, 3' long door saddles	72.00	lf	703	868	-		-	-	21.817 /lf	1,571
1430	Door hardware, hinges, full mortise, high frequency, brass base, US10, 4-1/2" x 4-1/2"	36.00	pr	-	2,178	-		-	-	60.50 /pr	2,178

Central Kitsap Treatment Plant Solids Handling

Kitsap County

Detail Report - Direct Costs

Item	Description	Takeoff Qty		Labor Amount	Material Amount	Subcontract Amount	Subcontract Name	Equipment Amount	Other Amount	Total Unit Cost	Total Amount
08 11 16.060	*Aluminum Doors & Frames (6070)*										
1200	Paints & coatings, exterior, door & frame, one side, flush, 1 coat, 3' x 7'	24.00	ea	561	55	-		-	-	25.655 /ea	616
	08 11 16.060 Aluminum Doors & Frames (6070)			*11,211*	*39,821*					*4,252.643/EA*	*51,032*
	12.00 EA										
	183.294 Labor hours										
	08.11.16.P010 O & M Building - Interior Doors - 6' x 7'			*11,211*	*39,821*	*0*		*0*	*0*	*4,252.643/EA*	*51,032*
	12.00 EA										
	183.294 Labor hours										
08.11.16.P015	*O & M Building - Interior Doors - 3' x 7'*										
08 11 16.030	*Aluminum Doors & Frames (3070)*										
1000	Frames, steel, knock down, hollow metal, single, 16 ga., up to 4-7/8" deep, 3'-0" x 7'-0"	17.00	EA	996	3,315	-		-	-	253.60 /EA	4,311
5050	Doors, aluminum, commercial entrance, flush panel doors, single, 3'-0" x 7'-0", incl. hinges, push/pull, deadlock, cylinder, threshold, excl. glazing	17.00	ea	7,023	14,620	-		-	-	1,273.120 /ea	21,643
3000	Door hardware, panic device, narrow stile, mortise bar, exit only	17.00	ea	1,992	10,200	-		-	-	717.20 /ea	12,192
0011	Thresholds, aluminum, 3' long door saddles	51.00	lf	498	615	-		-	-	21.817 /lf	1,113
1430	Door hardware, hinges, full mortise, high frequency, brass base, US10, 4-1/2" x 4-1/2"	25.50	pr	-	1,543	-		-	-	60.50 /pr	1,543
1200	Paints & coatings, exterior, door & frame, one side, flush, 1 coat, 3' x 7'	17.00	ea	397	39	-		-	-	25.655 /ea	436
	08 11 16.030 Aluminum Doors & Frames (3070)			*10,907*	*30,331*					*2,425.775/EA*	*41,238*
	17.00 EA										
	176.300 Labor hours										
	08.11.16.P015 O & M Building - Interior Doors - 3' x 7'			*10,907*	*30,331*	*0*		*0*	*0*	*2,425.775/EA*	*41,238*
	17.00 EA										
	176.300 Labor hours										
08.33.23.P005	*O & M Building - Overhead Doors - 14' x 14'*										
08 33 23.000	*Steel Rolling Overhead Doors*										
2500	Doors, rolling service, steel, manual, fire, class A, 20 gauge, 14' x 14' high, incl. hardware	4.00	EA	6,885	15,900	-		-	-	5,696.333 /EA	22,785
3300	Doors, rolling service, steel, manual, for enamel finish, add	784.00	sf	-	1,725	-		-	-	2.20 /sf	1,725
3700	Doors, rolling service, steel, manual, for safety edge bottom bar, electric, add	56.00	lf	-	2,520	-		-	-	45.00 /lf	2,520
4000	Doors, rolling service, steel, manual, for weatherstripping, extruded rubber, jambs, add	168.00	lf	-	2,638	-		-	-	15.70 /lf	2,638

Central Kitsap Treatment Plant Solids Handling

Kitsap County

Detail Report - Direct Costs

Item	Description	Takeoff Qty		Labor Amount	Material Amount	Subcontract Amount	Name	Equipment Amount	Other Amount	Total Unit Cost	Total Amount
08 33 23.000	*Steel Rolling Overhead Doors*										
4500	Doors, rolling service, steel, manual, motor operators for, to 14' x 14' opening	4.00	ea	826	4,800	-		-	-	1,406.56 /ea	5,626
4700	Doors, rolling service, steel, manual, for fire door, additional fusible link, add	16.00	ea	-	496	-		-	-	31.00 /ea	496
	08 33 23.000 Steel Rolling Overhead Doors			*7,712*	*28,078*					*8,947.493/EA*	*35,790*
	4.00 EA										
	119.467 Labor hours										
	08.33.23.P005 O & M Building - Overhead Doors - 14' x 14'			*7,712*	*28,078*	*0*		*0*	*0*	*8,947.493/EA*	*35,790*
	4.00 EA										
	119.467 Labor hours										
	DIVISION 08 OPENINGS			**32,632**	**109,160**	**0**		**0**	**0**	**3,938.688/EA**	**141,793**
	36.00 EA										
	524.884 Labor hours										
DIVISION 09	**FINISHES**										
09 29 00.001.10	*Building Allowance Cost*										
01 21 00.000	*Allowances*										
2100	Interior Finishes Allowance	21,040.00	SF	9,864		105,200		-	-	5.469 /SF	115,064
2100	Tile Allowance	21,040.00	sf	9,864		210,400		-	-	10.469 /sf	220,264
	01 21 00.000 Allowances			*19,727*		*315,600*				*15.938/SF*	*335,327*
	21,040.00 SF										
	336.64 Labor hours										
	09 29 00.001.10 Building Allowance Cost			*19,727*	*0*	*315,600*		*0*	*0*	*15.938/SF*	*335,327*
	21,040.00 SF										
	336.64 Labor hours										
09.29.00.P005	*O & M Building - Interior Walls - 10' HIgh x 1,000 LF*										
09 29 00.001	*2-sided Drywall Partition on 3 5/8" Metal Studs*										
0120	Blanket insulation, for walls or ceilings, kraft faced fiberglass, 3-1/2" thick, R15, 15" wide	10,000.00	sf	3,473	5,100	-		-	-	0.857 /sf	8,573
2300	Metal stud partition, non-load bearing, galvanized, 10' high, 3-5/8" wide,25 gauge, 16" O.C., includes top & bottom track	10,000.00	SF	9,767	3,800	-		-	-	1.357 /SF	13,567
3600	Gypsum board, for taping & finishing joints, add	20,000.00	sf	9,376	1,000	-		-	-	0.519 /sf	10,376
2100	Gypsum wallboard, on walls, fire resistant, 5/8" thick, finish excluded	20,000.00	sf	9,376	7,200	-		-	-	0.829 /sf	16,576

Central Kitsap Treatment Plant Solids Handling

Kitsap County

Detail Report - Direct Costs

Item	Description	Takeoff Qty		Labor Amount	Material Amount	Subcontract Amount	Name	Equipment Amount	Other Amount	Total Unit Cost	Total Amount
	09 29 00.001 2-sided Drywall Partition on 3 5/8" Metal Studs			*31,991*	*17,100*					*4.909/SF*	*49,091*
	10,000.00 SF										
	545.926 Labor hours										
	09.29.00.P005 O & M Building - Interior Walls - 10' HIgh x 1,000 LF			*31,991*	*17,100*	*0*		*0*	*0*	*4.909/SF*	*49,091*
	10,000.00 SF										
	545.926 Labor hours										
	DIVISION 09 FINISHES			**51,718**	**17,100**	**315,600**		**0**	**0**		**384,418**
	882.566 Labor hours										
DIVISION 21		**FIRE SUPPRESSION**									
21.10.00.P005		*O & M Building - Wet Based Fire Protection*									
21 10 00.000	*Water Based Fire Suppression Systems*										
6260	Sprinkler system valve alarm, 3" size, includes retard chamber, trim, gauges & alarm line strainer	1.578	ea	680	3,501	-		-	-	2,649.92 /ea	4,182
6520	Sprinkler system components, valves, check, swing, cast iron body, brass fittings, automatic ball drip, 4" size	1.578	ea	680	937	-		-	-	1,024.918 /ea	1,617
8840	Sprinkler system components, valves, flow control, 4" size, includes trim & gauges	1.578	ea	1,538	7,643	-		-	-	5,818.60 /ea	9,182
7160	Standpipe connections, wall, with plugs & chains, single, flush, brass, 2-1/2" x 2-1/2"	1.578	ea	408	349	-		-	-	479.956 /ea	757
1220	Sprinkler system components, alarm, water motor, complete with gong	1.578	ea	279	720	-		-	-	633.26 /ea	999
n 3720	Sprinkler system components,sprinkler heads,standard spray,pendent upright,brass,135 286 degrees f,1/2"npt,3/8"orifice,excludes supply piping	88.369	ea	3,911	3,038	-		-	-	78.630 /ea	6,948
1110	Valves, bronze, angle, rising stem, threaded, 150 lb., 2"	1.578	ea	103	1,874	-		-	-	1,253.016 /ea	1,977
1910	Valves, bronze, check, swing, regrinding disc, threaded, class 150, 2-1/2"	1.578	ea	139	2,120	-		-	-	1,431.65 /ea	2,259
3450	Valves, bronze, gate, non-rising stem, threaded, class 150, 1"	1.578	ea	60	351	-		-	-	260.44 /ea	411
0580	Pipe, steel, black, threaded, 1" diameter, schedule 40, Spec. A-53, includes coupling and clevis hanger assembly sized for covering, 10' OC	361.367	lf	4,913	1,757	-		-	-	18.460 /lf	6,671
0590	Pipe, steel, black, threaded, 1-1/4" diameter, schedule 40, Spec. A-53, includes coupling and clevis hanger assembly sized for covering, 10' OC	179.895	lf	2,665	1,136	-		-	-	21.130 /lf	3,801
0600	Pipe, steel, black, threaded, 1-1/2" diameter, schedule 40, Spec. A-53, includes coupling and clevis hanger assembly sized for covering, 10' OC	361.367	lf	5,957	2,666	-		-	-	23.860 /lf	8,622

Central Kitsap Treatment Plant Solids Handling

Kitsap County

Detail Report - Direct Costs

Item		Description	Takeoff Qty		Labor Amount	Material Amount	Subcontract Amount	Subcontract Name	Equipment Amount	Other Amount	Total Unit Cost	Total Amount
21 10 00.000		*Water Based Fire Suppression Systems*										
	0610	Pipe, steel, black, threaded, 2" diameter, schedule 40, Spec. A-53, includes coupling and clevis hanger assembly sized for covering, 10' OC	310.871	lf	6,405	3,070	-		-	-	30.480 /lf	9,475
	0620	Pipe, steel, black, threaded, 2-1/2" diameter, schedule 40, Spec. A-53, includes coupling and clevis hanger assembly sized for covering, 10' OC	98.626	lf	2,601	1,812	-		-	-	44.740 /lf	4,413
	2110	Pipe, steel, black, welded, 4" diameter, schedule 40, Spec. A-53, includes yoke & roll hanger assembly, sized for covering, 10' OC	15.78	lf	562	444	-		60	-	67.579 /lf	1,066
	5100	Elbow, 90 Deg., steel, malleable iron, black, straight, threaded, 150 lb., 1"	15.78	ea	875	190	-		-	-	67.489 /ea	1,065
	5130	Elbow, 90 Deg., steel, malleable iron, black, straight, threaded, 150 lb., 2"	3.156	ea	231	142	-		-	-	118.257 /ea	373
	5510	Tee, steel, malleable iron, black, straight, threaded, 150 lb., 1"	12.624	ea	1,137	238	-		-	-	108.938 /ea	1,375
	5520	Tee, steel, malleable iron, black, straight, threaded, 150 lb., 1-1/4"	12.624	ea	1,189	387	-		-	-	124.801 /ea	1,575
	5530	Tee, steel, malleable iron, black, straight, threaded, 150 lb., 1-1/2"	25.248	ea	2,561	963	-		-	-	139.551 /ea	3,523
	5540	Tee, steel, malleable iron, black, straight, threaded, 150 lb., 2"	25.248	ea	3,026	1,641	-		-	-	184.861 /ea	4,667
	5550	Tee, steel, malleable iron, black, straight, threaded, 150 lb., 2-1/2"	9.468	ea	1,387	1,326	-		-	-	286.499 /ea	2,713
	5580	Tee, steel, malleable iron, black, straight, threaded, 150 lb., 4"	3.156	ea	1,040	1,578	-		-	-	829.63 /ea	2,618
	3680	Valves, iron body, gate, OS&Y, flanged, 125 lb., 4"	1.578	ea	694	1,933	-		-	-	1,664.50 /ea	2,627
	5800	Detection system, fire alarm horn, excluding wires & conduits	1.578	ea	159	105	-		-	-	166.762 /ea	263
		21 10 00.000 Water Based Fire Suppression Systems			*43,201*	*39,921*			*60*			*83,182*
		641.463 Labor hours 4.264 Equipment hours										
		21.10.00.P005 O & M Building - Wet Based Fire Protection			*43,201*	*39,921*	*0*		*60*	*0*		*83,182*
		641.463 Labor hours 4.264 Equipment hours										
		DIVISION 21 FIRE SUPPRESSION			**43,201**	**39,921**	**0**		**60**	**0**		**83,182**
		641.463 Labor hours 4.264 Equipment hours										
DIVISION 22		**PLUMBING**										
22 05 03.300.05		*Building Plumbing Allowance*										
22 05 03.300		*Plumbing, Other*										
n	0999	Building Plumbing Allowance	21,040.00	BSF			420,800				20.00 /BSF	420,800
		22 05 03.300 Plumbing, Other					*420,800*				*20.00 /BSF*	*420,800*
		21,040.00 BSF										

AACE Classification Accuracy Range

Upper Range +50% **Lower Range -30%**

Central Kitsap Treatment Plant Solids Handling

Kitsap County

Detail Report - Direct Costs

Item		Description	Takeoff Qty		Labor Amount	Material Amount	Subcontract Amount	Name	Equipment Amount	Other Amount	Total Unit Cost	Total Amount
		22 05 03.300 Plumbing, Other					*420,800*				*20.00 /BSF*	*420,800*
		21,040.00 BSF										
		22 05 03.300.05 Building Plumbing Allowance			*0*	*0*	*420,800*		*0*	*0*	*20.00 /BSF*	*420,800*
		21,040.00 BSF										
		DIVISION 22 PLUMBING			**0**	**0**	**420,800**		**0**	**0**	**20.00 /BSF**	**420,800**
		21,040.00 BSF										
DIVISION 23		**HEATING, VENTILATING & AIR-CONDITIONING (HVAC)**										
23 00 00.000.05		*Building HVAC Allowance*										
23 00 00.000		*HVAC Basic Materials and Methods*										
n	0999	Building HVAC Allowance	21,040.00	BSF			631,200				30.00 /BSF	631,200
		23 00 00.000 HVAC Basic Materials and Methods					*631,200*				*30.00 /BSF*	*631,200*
		21,040.00 BSF										
		23 00 00.000.05 Building HVAC Allowance			*0*	*0*	*631,200*		*0*	*0*	*30.00 /BSF*	*631,200*
		21,040.00 BSF										
		DIVISION 23 HEATING, VENTILATING & AIR-CONDITIONING (HVAC)			**0**	**0**	**631,200**		**0**	**0**	**30.00 /BSF**	**631,200**
		21,040.00 BSF										
DIVISION 31		**EARTHWORK**										
31.23.10.P005		*Excavation, Backfill, and Haul Off-Site*										
31 23 10.000		*Excavation, Backfill, and Haul Off-Site*										
n	6260	Strt excvt for minor strtr,bank measr,for sprd and mat ftngs,elvtr pits,and small bldng fndtn,sandy clay loam,2 cy bucket,machin excvtn,hydrlc backhoe	2,740.00	CY	11,523	-	-		12,838	-	8.891 /CY	24,361
	4010	Backfill, structural, sandy clay & loam, 200 H.P. dozer, 50' haul, from existing stockpile, excludes compaction	1,550.00	CY	441	-	-		1,019	-	0.942 /CY	1,460
	4060	Borrow, common earth, 1-1/2 C.Y. bucket, loading and/or spreading, front end loader, wheel-mounted	1,550.00	CY	1,108	12,400	-		720	-	9.179 /CY	14,228

Central Kitsap Treatment Plant Solids Handling

Kitsap County

Detail Report - Direct Costs

Item		Description	Takeoff Qty		Labor Amount	Material Amount	Subcontract Amount	Subcontract Name	Equipment Amount	Other Amount	Total Unit Cost	Total Amount
31 23 10.000		*Excavation, Backfill, and Haul Off-Site*										
n	0560	Hauling,excavated borrow material,loose cubic yards,20 mile round trip,0.4 load/hr,base wide rate,12 cy truck,highway haulers,excludes loading	1,260.00	CY	14,332	-	-		19,691	-	27.002 /CY	34,023
	0400	Compaction, structural, select fill, 8" lifts, sheepsfoot or wobbly wheel roller	1,550.00	CY	717	-	-		1,482	-	1.418 /CY	2,198
		31 23 10.000 Excavation, Backfill, and Haul Off-Site			*28,121*	*12,400*			*35,749*		*8.817/CY*	*76,270*
		8,650.00 CY										
		500.641 Labor hours										
		386.088 Equipment hours										
		31.23.10.P005 Excavation, Backfill, and Haul Off-Site			*28,121*	*12,400*	*0*		*35,749*	*0*	*8.817/CY*	*76,270*
		8,650.00 CY										
		500.641 Labor hours										
		386.088 Equipment hours										
		DIVISION 31 EARTHWORK			**28,121**	**12,400**	**0**		**35,749**	**0**	**8.817/CY**	**76,270**
		8,650.00 CY										
		500.641 Labor hours										
		386.088 Equipment hours										
DIVISION 32		**EXTERIOR IMPROVEMENTS**										
32 15 40.0100.05		*Pipe Storage Gravel, 6" Thick x 5,165 SF*										
32 15 40.0100		*Gravel Roadway*										
	0100	Aggregate for earthwork, bank run gravel, spread with 200 H.P. dozer, includes load at pit and haul, 2 miles round trip, excludes compaction	96.00	lcy	253	2,640	-		451	-	34.833 /lcy	3,344
	0012	Fine grading, finish grading, small area, to be paved with grader	573.874	SY	1,266	-	-		1,621	-	5.031 /SY	2,887
	5020	Compaction, riding, vibrating roller, 3 passes, 6" lifts	96.00	ecy	29	-	-		26	-	0.569 /ecy	55
n	0560	Hauling, asphalt material,loose cubic yards,20 mile round trip,0.4 load/hr,base wide rate,12 cy truck,highway haulers,excludes loading	73.00	lcy	830	-	-		1,141	-	27.002 /lcy	1,971
		32 15 40.0100 Gravel Roadway			*2,378*	*2,640*			*3,238*		*14.388/SY*	*8,257*
		573.874 SY										
		42.910 Labor hours										
		30.626 Equipment hours										
		32 15 40.0100.05 Pipe Storage Gravel, 6" Thick x 5,165 SF			*2,378*	*2,640*	*0*		*3,238*	*0*	*14.388/SY*	*8,257*
		573.874 SY										
		42.910 Labor hours										

AACE Classification Accuracy Range

Upper Range +50% **Lower Range -30%**

Central Kitsap Treatment Plant Solids Handling

Kitsap County

Detail Report - Direct Costs

Item		Description	Takeoff Qty		Labor Amount	Material Amount	Subcontract Amount	Name	Equipment Amount	Other Amount	Total Unit Cost	Total Amount
		32 15 40.0100.05 Pipe Storage Gravel, 6" Thick x 5,165 SF			*2,378*	*2,640*	*0*		*3,238*	*0*	*14.388/SY*	*8,257*
		573.874 SY										
		42.910 Labor hours										
		30.626 Equipment hours										
32 31 13.000.05		*Chainlink Fence - 6' High x 204 LF*										
32 31 13.000		*Chain Link Fence and Gates*										
n	7820	Chain link fence gates and posts, motor operators for gates, up to 45' sliding, excludes electric wiring & excavation	1.00	ea	1,960	2,925	-		-	-	4,885.00 /ea	4,885
	0200	High-security chain link fences, gates & systems, 3 wire barbed wire fence, 6' high, includes excavation and posts	204.00	LF	601	1,112	-		136	-	9.063 /LF	1,849
		32 31 13.000 Chain Link Fence and Gates			*2,561*	*4,037*			*136*		*33.009/LF*	*6,734*
		204.00 LF										
		44.24 Labor hours										
		8.16 Equipment hours										
		32 31 13.000.05 Chainlink Fence - 6' High x 204 LF			*2,561*	*4,037*	*0*		*136*	*0*	*33.009/LF*	*6,734*
		204.00 LF										
		44.24 Labor hours										
		8.16 Equipment hours										
		DIVISION 32 EXTERIOR IMPROVEMENTS			**4,940**	**6,677**	**0**		**3,374**	**0**	**14,990.47 /LS**	**14,990**
		1.00 LS										
		87.150 Labor hours										
		38.786 Equipment hours										
DIVISION 41		**MATERIAL PROCESSING & HANDLING EQUIPMENT**										
41 22 23.000.05		*Monorail, 200 LF*										
41 22 23.000		*Hoists, Trolleys, and Monorails*										
	3900	Conveyors, material handling, monorail, overhead, manual, channel type, 500 lb per LF	200.00	LF	7,182	7,350	-		-	-	72.660 /LF	14,532
	4300	Conveyors, material handling, monorail, overhead, manual, channel type, trolleys for, 8 wheel, 500 lb capacity	3.00	EA	-	4,185	-		-	-	1,395.00 /EA	4,185
		41 22 23.000 Hoists, Trolleys, and Monorails			*7,182*	*11,535*					*93.585/LF*	*18,717*
		200.00 LF										
		114.279 Labor hours										

AACE Classification Accuracy Range

Upper Range +50% **Lower Range -30%**

Central Kitsap Treatment Plant Solids Handling

Kitsap County

Detail Report - Direct Costs

Item	Description	Takeoff Qty	Labor Amount	Material Amount	Subcontract Amount	Subcontract Name	Equipment Amount	Other Amount	Total Unit Cost	Total Amount
	41 22 23.000.05 Monorail, 200 LF		*7,182*	*11,535*	*0*		*0*	*0*	*93.585/LF*	*18,717*
	200.00 LF									
	114.279 Labor hours									
	DIVISION 41 MATERIAL PROCESSING & HANDLING EQUIPMENT		**7,182**	**11,535**	**0**		**0**	**0**	**93.585/LF**	**18,717**
	200.00 LF									
	114.279 Labor hours									
	466 O&M BUILDING		***794,848***	***1,393,653***	***1,367,600***		***89,620***	***0***	***173.276/BSF***	***3,645,722***
	21,040.00 BSF									
	14,194.323 Labor hours									
	1,394.493 Equipment hours									

500 CENTRATE STORAGE - EXISTING GRAV THICKENER

DIVISION 03 CONCRETE

03 09 00.885.15 Concrete Fill, 10'-10" Deep x 9'-5"Long x 5' Wide

Item	Description	Takeoff Qty	Labor Amount	Material Amount	Subcontract Amount	Subcontract Name	Equipment Amount	Other Amount	Total Unit Cost	Total Amount
03 09 00.885	*Concrete_Grout/Flowable Fill*									
4350	Structural concrete, placing, slab on grade, pumped, up to 6" thick, includes leveling (strike off) & consolidation, excludes material	18.892 CY	471	-	-		72	-	28.755 /CY	543
n 4350	Strt concret,ready mix,flowabl fill,strt,1000 psi,includs ash,portlnd cement type i,aggregt,sand and water,delivrd,excluds all additvs and treatments (Flow Fill)	18.892 cy	-	1,587	-		-	-	84.00 /cy	1,587
	03 09 00.885 Concrete_Grout/Flowable Fill		*471*	*1,587*			*72*		*112.755/CY*	*2,130*
	18.892 CY									
	9.301 Labor hours									
	3.488 Equipment hours									
	03 09 00.885.15 Concrete Fill, 10'-10" Deep x 9'-5"Long x 5' Wide		*471*	*1,587*	*0*		*72*	*0*	*112.755/CY*	*2,130*
	18.892 CY									
	9.301 Labor hours									
	3.488 Equipment hours									

03 11 13.502.05 Concrete Centre Slab, 8" Thick x 1,510 SF

03 11 13.502 *08" Slab on Grade*

Central Kitsap Treatment Plant Solids Handling

Kitsap County

Detail Report - Direct Costs

	Item	Description	Takeoff Qty		Labor Amount	Material Amount	Subcontract Amount	Name	Equipment Amount	Other Amount	Total Unit Cost	Total Amount
03 11 13.502		*08" Slab on Grade*										
	3050	C.I.P. concrete forms, slab on grade, edge, wood, 7" to 12" high, 4 use, includes erecting, bracing, stripping and cleaning	103.676	sfca	425	126	-		-	-	5.322 /sfca	552
n	9015	C.I.P. concrete forms, bulkhead for slab on grade w/ keyway, up to 12", exp metal, includes erecting, bracing, stripping and cleaning	50.359	sfca	123	23	-		-	-	2.893 /sfca	146
n	2050	Reinforcing steel, unload and sort, add to base_SLAB ON GRADE	3.325	ton	120	-	-		69	-	56.815 /ton	189
	0600	Reinforcing steel, in place, slab on grade, #3 to #7, A615, grade 60, incl labor for accessories, excl material for accessories	3.325	ton	2,986	4,821	-		-	-	2,348.087 /ton	7,807
	2220	Reinforcing steel, crane cost for handling, 90 picks/day, up to 0.5 Ton/day	3.325	ton	342	-	-		198	-	162.330 /ton	540
	4650	Structural concrete, placing, slab on grade, pumped, over 6" thick, includes leveling (strike off) & consolidation, excludes material	3.80	cy	67	-	-		10	-	20.205 /cy	77
	4650	Structural concrete, placing, slab on grade, pumped, over 6" thick, includes leveling (strike off) & consolidation, excludes material	38.00	cy	666	-	-		101	-	20.206 /cy	768
n	0725	Struct SLAB ON GRADE concrete,ready mix,normal wt,4500 psi,includes local aggregate,sand,portland cement and water,delivered, includes all additives	3.80	cy	-	874	-		-	-	230.00 /cy	874
n	0725	Struct SLAB ON GRADE concrete,ready mix,normal wt,4500 psi,includes local aggregate,sand,portland cement and water,delivered, includes all additives	38.00	CY	-	8,740	-		-	-	230.00 /CY	8,740
n	0255	Concrete finishing, floors, manual screed, bull float, machine float & steel trowel (walk-behind)_SOG	1,510.022	sf	1,107	-	-		81	-	0.787 /sf	1,189
n	0122	Control joint, concrete floor slab, sawcut in green concrete, 1" depth_SOG	75.501	lf	33	2	-		4	-	0.529 /lf	40
n	0215	Control joint, clean out control joint of debris_SOG	75.501	lf	6	-	-			-	0.073 /lf	6
n	0367	Control joint, joint sealant, polyurethane, 1/4" x 1/4" (308 LF/Gal)_SOG	151.002	lf	246	24	-		-	-	1.790 /lf	270
n	0310	Concrete surface treatment, curing, sprayed membrane compound_SOG	15.10	csf	120	113	-		-	-	15.408 /csf	233
	1200	Vapor retarders, building paper, polyethylene vapor barrier, standard, 10 mil (.010" thick)	15.10	sq	191	123	-		-	-	20.821 /sq	314
n	1310	Fill, gravel fill, compacted, under floor slabs, alternate pricing method, 12" deep_SOG	64.00	ecy	698	2,048	-		79	-	44.143 /ecy	2,825
n	1136	Hauling, excavated borrow material, loose cubic yards, 20 mile round trip, 0.4 loads/hour, 16.5 c.y. dump trailer, highway haulers, excludes loading	64.00	lcy	526	-	-		794	-	20.626 /lcy	1,320
		03 11 13.502 08" Slab on Grade			*7,656*	*16,894*			*1,338*		*681.286/CY*	*25,889*

38.00 CY

133.294 Labor hours
35.078 Equipment hours

AACE Classification Accuracy Range

Upper Range +50% **Lower Range -30%**

Central Kitsap Treatment Plant Solids Handling

Kitsap County

Detail Report - Direct Costs

Item		Description	Takeoff Qty		Labor Amount	Material Amount	Subcontract Amount	Subcontract Name	Equipment Amount	Other Amount	Total Unit Cost	Total Amount
		03 11 13.502.05 Concrete Centre Slab, 8" Thick x 1,510 SF			*7,656*	*16,894*	*0*		*1,338*	*0*	*681.286/CY*	*25,889*
		38.00 CY										
		133.294 Labor hours										
		35.078 Equipment hours										
03 11 13.504.50		*Concrete Launder Wall, 4' High x 146 LF*										
03 11 13.804		*12" CIP Wall*										
	0500	C.I.P. concrete forms, wall, wood bulkhead with 2 piece keyway, 1 use, includes erecting, bracing, stripping and cleaning	30.00	lf	312	102	-		-	-	13.792 /lf	414
	2550	C.I.P. concrete forms, wall, job built, plywood, over 8' to 16' high, 4 use, includes erecting, bracing, stripping and cleaning	1,168.00	sfca	8,143	1,156	-		-	-	7.962 /sfca	9,300
	5200	Chamfer strip, wood, 3/4" wide	59.00	lf	53	8	-		-	-	1.033 /lf	61
	1400	Tie cones, plastic, for coil tie system, for CIP wall forms, 1/2" bolt diameter x 1" setback length, includes material only	1.00	c	-	65	-		-	-	65.00 /c	65
n	3010	Waterstop, rubber, center bulb, 1/4" thick x 6" wide_WALLS	176.00	lf	569	1,320	-		-	-	10.733 /lf	1,889
	0100	Splice rebar, standard, self-aligning type, taper threaded, #4 bars, includes holding rebar in place while splicing	24.20	ea	207	310	-		-	-	21.373 /ea	517
n	2020	Reinforcing steel, unload and sort, add to base_WALLS	2.20	ton	79	-	-		46	-	56.814 /ton	125
n	2214	Reinforcing steel, crane cost for handling, average, add_WALLS	2.20	ton	86	-	-		50	-	61.755 /ton	136
	0700	Reinforcing steel, in place, walls, #3 to #7, A615, grade 60, incl labor for accessories, excl material for accessories	2.20	ton	1,515	3,190	-		-	-	2,138.530 /ton	4,705
	5100	Structural concrete, placing, walls, pumped, 12" thick, includes leveling (strike off) & consolidation, excludes material	2.20	cy	65	-	-		10	-	33.98 /cy	75
	5100	Structural concrete, placing, walls, pumped, 12" thick, includes leveling (strike off) & consolidation, excludes material	22.00	cy	649	-	-		99	-	33.983 /cy	748
n	0525	Struct WALLS concrete,ready mix,normal wt,4500 psi,includes local aggregate,sand,portland cement and water,delivered, includes all additives	22.00	CY	-	5,060	-		-	-	230.00 /CY	5,060
n	0525	Struct WALLS concrete,ready mix,normal wt,4500 psi,includes local aggregate,sand,portland cement and water,delivered, includes all additives	2.20	cy	-	506	-		-	-	230.00 /cy	506
n	0210	Control joint, clean out control joint of debris_WALLS	30.00	lf	2	-	-			-	0.073 /lf	2
n	0366	Control joint, joint sealant, polyurethane, 1/4" x 1/4" (308 LF/Gal)_WALLS	30.00	lf	49	5	-		-	-	1.790 /lf	54
	0020	Concrete finishing, walls, includes breaking ties and patching voids	1,168.00	sf	952	47	-		-	-	0.855 /sf	998

Central Kitsap Treatment Plant Solids Handling

Kitsap County

Detail Report - Direct Costs

	Item	Description	Takeoff Qty		Labor Amount	Material Amount	Subcontract Amount	Subcontract Name	Equipment Amount	Other Amount	Total Unit Cost	Total Amount
03 11 13.804		*12" CIP Wall*										
	0050	Concrete finishing, walls, burlap rub with grout, includes breaking ties and patching voids	584.00	sf	571	23	-		-	-	1.018 /sf	594
		03 11 13.804 12" CIP Wall			*13,252*	*11,792*			*204*		*1,147.655/CY*	*25,248*
		22.00 CY										
		230.785 Labor hours										
		5.647 Equipment hours										
		03 11 13.504.50 Concrete Launder Wall, 4' High x 146 LF			*13,252*	*11,792*	*0*		*204*	*0*	*1,147.655/CY*	*25,248*
		22.00 CY										
		230.785 Labor hours										
		5.647 Equipment hours										
03 11 13.505.20		*Concrete Slab, 16" Thick x 60 SF*										
03 11 13.505		*16" Slab on Grade*										
	3050	C.I.P. concrete forms, slab on grade, edge, wood, 7" to 12" high, 4 use, includes erecting, bracing, stripping and cleaning	41.302	sfca	169	50	-		-	-	5.322 /sfca	220
n	9015	C.I.P. concrete forms, bulkhead for slab on grade w/ keyway, up to 12", exp metal, includes erecting, bracing, stripping and cleaning	3.999	sfca	10	2	-		-	-	2.893 /sfca	12
n	2050	Reinforcing steel, unload and sort, add to base_SLAB ON GRADE	0.263	ton	9	-	-		5	-	56.844 /ton	15
	0600	Reinforcing steel, in place, slab on grade, #3 to #7, A615, grade 60, incl labor for accessories, excl material for accessories	0.263	ton	236	381	-		-	-	2,348.10 /ton	618
	2220	Reinforcing steel, crane cost for handling, 90 picks/day, up to 0.5 Ton/day	0.263	ton	27	-	-		16	-	162.32 /ton	43
	4650	Structural concrete, placing, slab on grade, pumped, over 6" thick, includes leveling (strike off) & consolidation, excludes material	3.00	cy	53	-	-		8	-	20.207 /cy	61
	4650	Structural concrete, placing, slab on grade, pumped, over 6" thick, includes leveling (strike off) & consolidation, excludes material	0.30	cy	5	-	-		1	-	20.20 /cy	6
n	0725	Struct SLAB ON GRADE concrete,ready mix,normal wt,4500 psi,includes local aggregate,sand,portland cement and water,delivered, includes all additives	3.00	CY	-	690	-		-	-	230.00 /CY	690
n	0725	Struct SLAB ON GRADE concrete,ready mix,normal wt,4500 psi,includes local aggregate,sand,portland cement and water,delivered, includes all additives	0.30	cy	-	69	-		-	-	230.00 /cy	69
n	0255	Concrete finishing, floors, manual screed, bull float, machine float & steel trowel (walk-behind)_SOG	60.001	sf	44	-	-		3	-	0.787 /sf	47
n	0122	Control joint, concrete floor slab, sawcut in green concrete, 1" depth_SOG	3.00	lf	1	0	-		0	-	0.53 /lf	2
n	0215	Control joint, clean out control joint of debris_SOG	3.00	lf	0	-	-			-	0.073 /lf	0

AACE Classification Accuracy Range

Upper Range +50% **Lower Range -30%**

Central Kitsap Treatment Plant Solids Handling

Kitsap County

Detail Report - Direct Costs

	Item	Description	Takeoff Qty		Labor Amount	Material Amount	Subcontract Amount	Subcontract Name	Equipment Amount	Other Amount	Total Unit Cost	Total Amount
03 11 13.505		*16" Slab on Grade*										
n	0367	Control joint, joint sealant, polyurethane, 1/4" x 1/4" (308 LF/Gal)_SOG	6.00	lf	10	1	-		-	-	1.79 /lf	11
n	0310	Concrete surface treatment, curing, sprayed membrane compound_SOG	0.60	csf	5	4	-		-	-	15.40 /csf	9
	1200	Vapor retarders, building paper, polyethylene vapor barrier, standard, 10 mil (.010" thick)	0.60	sq	8	5	-		-	-	20.817 /sq	12
n	1310	Fill, gravel fill, compacted, under floor slabs, alternate pricing method, 12" deep_SOG	3.00	ecy	33	96	-		4	-	44.143 /ecy	132
n	1136	Hauling, excavated borrow material, loose cubic yards, 20 mile round trip, 0.4 loads/hour, 16.5 c.y. dump trailer, highway haulers, excludes loading	3.00	lcy	25	-	-		37	-	20.623 /lcy	62
		03 11 13.505 16" Slab on Grade			*635*	*1,299*			*74*		*669.357/CY*	*2,008*
		3.00 CY										
		10.957 Labor hours										
		1.799 Equipment hours										
		03 11 13.505.20 Concrete Slab, 16" Thick x 60 SF			*635*	*1,299*	*0*		*74*	*0*	*669.357/CY*	*2,008*
		3.00 CY										
		10.957 Labor hours										
		1.799 Equipment hours										
03 11 13.512.05		*Concrete Centre Center Slab, 36" Thick x 62 SF*										
03 11 13.512		*38" Slab on Grade*										
	3050	C.I.P. concrete forms, slab on grade, edge, wood, 7" to 12" high, 4 use, includes erecting, bracing, stripping and cleaning	94.488	sfca	388	115	-		-	-	5.322 /sfca	503
n	9015	C.I.P. concrete forms, bulkhead for slab on grade w/ keyway, up to 12", exp metal, includes erecting, bracing, stripping and cleaning	9.30	sfca	23	4	-		-	-	2.894 /sfca	27
n	2050	Reinforcing steel, unload and sort, add to base_SLAB ON GRADE	0.613	ton	22	-	-		13	-	56.82 /ton	35
	0600	Reinforcing steel, in place, slab on grade, #3 to #7, A615, grade 60, incl labor for accessories, excl material for accessories	0.613	ton	551	889	-		-	-	2,348.09 /ton	1,439
	2220	Reinforcing steel, crane cost for handling, 90 picks/day, up to 0.5 Ton/day	0.613	ton	63	-	-		37	-	162.32 /ton	100
	4650	Structural concrete, placing, slab on grade, pumped, over 6" thick, includes leveling (strike off) & consolidation, excludes material	0.70	cy	12	-	-		2	-	20.214 /cy	14
	4650	Structural concrete, placing, slab on grade, pumped, over 6" thick, includes leveling (strike off) & consolidation, excludes material	7.00	cy	123	-	-		19	-	20.206 /cy	141
n	0725	Struct SLAB ON GRADE concrete,ready mix,normal wt,4500 psi,includes local aggregate,sand,portland cement and water,delivered, includes all additives	0.70	cy	-	161	-		-	-	230.00 /cy	161

Central Kitsap Treatment Plant Solids Handling

Kitsap County

Detail Report - Direct Costs

	Item	Description	Takeoff Qty		Labor Amount	Material Amount	Subcontract Amount	Subcontract Name	Equipment Amount	Other Amount	Total Unit Cost	Total Amount
03 11 13.512		*38" Slab on Grade*										
n	0725	Struct SLAB ON GRADE concrete,ready mix,normal wt,4500 psi,includes local aggregate,sand,portland cement and water,delivered, includes all additives	7.00	CY	-	1,610	-		-	-	230.00 /CY	1,610
n	0255	Concrete finishing, floors, manual screed, bull float, machine float & steel trowel (walk-behind)_SOG	62.00	sf	45	-	-		3	-	0.787 /sf	49
n	0122	Control joint, concrete floor slab, sawcut in green concrete, 1" depth_SOG	3.10	lf	1	0	-		0	-	0.526 /lf	2
n	0215	Control joint, clean out control joint of debris_SOG	3.10	lf	0	-	-			-	0.074 /lf	0
n	0367	Control joint, joint sealant, polyurethane, 1/4" x 1/4" (308 LF/Gal)_SOG	6.20	lf	10	1	-		-	-	1.789 /lf	11
n	0310	Concrete surface treatment, curing, sprayed membrane compound_SOG	0.62	csf	5	5	-		-	-	15.40 /csf	10
	1200	Vapor retarders, building paper, polyethylene vapor barrier, standard, 10 mil (.010" thick)	0.62	sq	8	5	-		-	-	20.82 /sq	13
n	1310	Fill, gravel fill, compacted, under floor slabs, alternate pricing method, 12" deep_SOG	3.00	ecy	33	96	-		4	-	44.143 /ecy	132
n	1136	Hauling, excavated borrow material, loose cubic yards, 20 mile round trip, 0.4 loads/hour, 16.5 c.y. dump trailer, highway haulers, excludes loading	3.00	lcy	25	-	-		37	-	20.623 /lcy	62
		03 11 13.512 38" Slab on Grade			*1,308*	*2,886*			*114*		*615.516/CY*	*4,309*
		7.00 CY										
		22.292 Labor hours										
		2.487 Equipment hours										
		03 11 13.512.05 Concrete Centre Center Slab, 36" Thick x 62 SF			*1,308*	*2,886*	*0*		*114*	*0*	*615.516/CY*	*4,309*
		7.00 CY										
		22.292 Labor hours										
		2.487 Equipment hours										
03 11 13.604.05		*Concrete Centre Center Slab, 74" Thick x 17 SF*										
03 11 13.604		*74" Slab on Grade*										
	3050	C.I.P. concrete forms, slab on grade, edge, wood, 7" to 12" high, 4 use, includes erecting, bracing, stripping and cleaning	101.69	sfca	417	124	-		-	-	5.322 /sfca	541
n	9015	C.I.P. concrete forms, bulkhead for slab on grade w/ keyway, up to 12", exp metal, includes erecting, bracing, stripping and cleaning	5.241	sfca	13	2	-		-	-	2.894 /sfca	15
n	2050	Reinforcing steel, unload and sort, add to base_SLAB ON GRADE	0.35	ton	13	-	-		7	-	56.80 /ton	20
	0600	Reinforcing steel, in place, slab on grade, #3 to #7, A615, grade 60, incl labor for accessories, excl material for accessories	0.35	ton	314	508	-		-	-	2,348.086 /ton	822
	2220	Reinforcing steel, crane cost for handling, 90 picks/day, up to 0.5 Ton/day	0.35	ton	36	-	-		21	-	162.34 /ton	57

Central Kitsap Treatment Plant Solids Handling

Kitsap County

Detail Report - Direct Costs

	Item	Description	Takeoff Qty		Labor Amount	Material Amount	Subcontract Amount	Subcontract Name	Equipment Amount	Other Amount	Total Unit Cost	Total Amount
03 11 13.604		*74" Slab on Grade*										
	4650	Structural concrete, placing, slab on grade, pumped, over 6" thick, includes leveling (strike off) & consolidation, excludes material	4.00	cy	70	-	-		11	-	20.205 /cy	81
	4650	Structural concrete, placing, slab on grade, pumped, over 6" thick, includes leveling (strike off) & consolidation, excludes material	0.40	cy	7	-	-		1	-	20.20 /cy	8
n	0725	Struct SLAB ON GRADE concrete,ready mix,normal wt,4500 psi,includes local aggregate,sand,portland cement and water,delivered, includes all additives	0.40	cy	-	92	-		-	-	230.00 /cy	92
n	0725	Struct SLAB ON GRADE concrete,ready mix,normal wt,4500 psi,includes local aggregate,sand,portland cement and water,delivered, includes all additives	4.00	CY	-	920	-		-	-	230.00 /CY	920
n	0255	Concrete finishing, floors, manual screed, bull float, machine float & steel trowel (walk-behind)_SOG	16.999	sf	12	-	-		1	-	0.788 /sf	13
n	0122	Control joint, concrete floor slab, sawcut in green concrete, 1" depth_SOG	0.85	lf	0	0	-		0	-	0.53 /lf	0
n	0215	Control joint, clean out control joint of debris_SOG	0.85	lf	0	-	-			-	0.07 /lf	0
n	0367	Control joint, joint sealant, polyurethane, 1/4" x 1/4" (308 LF/Gal)_SOG	1.70	lf	3	0	-		-	-	1.79 /lf	3
n	0310	Concrete surface treatment, curing, sprayed membrane compound_SOG	0.17	csf	1	1	-		-	-	15.40 /csf	3
	1200	Vapor retarders, building paper, polyethylene vapor barrier, standard, 10 mil (.010" thick)	0.17	sq	2	1	-		-	-	20.80 /sq	4
n	1310	Fill, gravel fill, compacted, under floor slabs, alternate pricing method, 12" deep_SOG	1.00	ecy	11	32	-		1	-	44.15 /ecy	44
n	1136	Hauling, excavated borrow material, loose cubic yards, 20 mile round trip, 0.4 loads/hour, 16.5 c.y. dump trailer, highway haulers, excludes loading	1.00	lcy	8	-	-		12	-	20.62 /lcy	21
		03 11 13.604 74" Slab on Grade			*908*	*1,681*			*55*		*660.918/CY*	*2,644*
		4.00 CY										
		15.586 Labor hours										
		1.094 Equipment hours										
		03 11 13.604.05 Concrete Centre Center Slab, 74" Thick x 17 SF			*908*	*1,681*	*0*		*55*	*0*	*660.918/CY*	*2,644*
		4.00 CY										
		15.586 Labor hours										
		1.094 Equipment hours										
03 11 13.803.20		*Concrete Stariway Tank Wall, 13'-4" High x 18 LF*										
03 11 13.803		*10" CIP Wall*										
	0500	C.I.P. concrete forms, wall, wood bulkhead with 2 piece keyway, 1 use, includes erecting, bracing, stripping and cleaning	12.00	lf	125	41	-		-	-	13.793 /lf	166

AACE Classification Accuracy Range

Upper Range +50% **Lower Range -30%**

Central Kitsap Treatment Plant Solids Handling

Kitsap County

Detail Report - Direct Costs

	Item	Description	Takeoff Qty		Labor Amount	Material Amount	Subcontract Amount	Subcontract Name	Equipment Amount	Other Amount	Total Unit Cost	Total Amount
03 11 13.803		*10" CIP Wall*										
	2550	C.I.P. concrete forms, wall, job built, plywood, over 8' to 16' high, 4 use, includes erecting, bracing, stripping and cleaning	479.988	sfca	3,347	475	-		-	-	7.962 /sfca	3,822
	5200	Chamfer strip, wood, 3/4" wide	24.00	lf	21	3	-		-	-	1.033 /lf	25
	1400	Tie cones, plastic, for coil tie system, for CIP wall forms, 1/2" bolt diameter x 1" setback length, includes material only	1.00	c	-	65	-		-	-	65.00 /c	65
n	3010	Waterstop, rubber, center bulb, 1/4" thick x 6" wide_WALLS	30.00	lf	97	225	-		-	-	10.733 /lf	322
	0100	Splice rebar, standard, self-aligning type, taper threaded, #4 bars, includes holding rebar in place while splicing	8.80	ea	75	113	-		-	-	21.373 /ea	188
n	2020	Reinforcing steel, unload and sort, add to base_WALLS	0.80	ton	29	-	-		17	-	56.81 /ton	45
n	2214	Reinforcing steel, crane cost for handling, average, add_WALLS	0.80	ton	31	-	-		18	-	61.76 /ton	49
	0700	Reinforcing steel, in place, walls, #3 to #7, A615, grade 60, incl labor for accessories, excl material for accessories	0.80	ton	551	1,160	-		-	-	2,138.54 /ton	1,711
	5100	Structural concrete, placing, walls, pumped, 12" thick, includes leveling (strike off) & consolidation, excludes material	0.80	cy	24	-	-		4	-	33.99 /cy	27
	5100	Structural concrete, placing, walls, pumped, 12" thick, includes leveling (strike off) & consolidation, excludes material	8.00	cy	236	-	-		36	-	33.983 /cy	272
n	0525	Struct WALLS concrete,ready mix,normal wt,4500 psi,includes local aggregate,sand,portland cement and water,delivered, includes all additives	0.80	cy	-	184	-		-	-	230.00 /cy	184
n	0525	Struct WALLS concrete,ready mix,normal wt,4500 psi,includes local aggregate,sand,portland cement and water,delivered, includes all additives	8.00	CY	-	1,840	-		-	-	230.00 /CY	1,840
n	0210	Control joint, clean out control joint of debris_WALLS	12.00	lf	1	-	-			-	0.073 /lf	1
n	0366	Control joint, joint sealant, polyurethane, 1/4" x 1/4" (308 LF/Gal)_WALLS	12.00	lf	20	2	-		-	-	1.79 /lf	21
	0020	Concrete finishing, walls, includes breaking ties and patching voids	479.988	sf	391	19	-		-	-	0.855 /sf	410
	0050	Concrete finishing, walls, burlap rub with grout, includes breaking ties and patching voids	239.994	sf	235	10	-		-	-	1.018 /sf	244
		03 11 13.803 10" CIP Wall			*5,182*	*4,137*			*74*		*1,174.096/CY*	*9,393*
		8.00 CY										
		90.341 Labor hours										
		2.054 Equipment hours										
		03 11 13.803.20 Concrete Stariway Tank Wall, 13'-4" High x 18 LF			*5,182*	*4,137*	*0*		*74*	*0*	*1,174.096/CY*	*9,393*
		8.00 CY										
		90.341 Labor hours										

AACE Classification Accuracy Range

Upper Range +50% **Lower Range -30%**

Central Kitsap Treatment Plant Solids Handling

Kitsap County

Detail Report - Direct Costs

Item		Description	Takeoff Qty		Labor Amount	Material Amount	Subcontract Amount	Name	Equipment Amount	Other Amount	Total Unit Cost	Total Amount
		03 11 13.803.20 Concrete Stariway Tank Wall, 13'-4" High x 18 LF			*5,182*	*4,137*	*0*		*74*	*0*	*1,174.096/CY*	*9,393*
		8.00 CY										
		90.341 Labor hours										
		2.054 Equipment hours										
03 11 13.803.25		*Concrete Stairway Vault Wall, 18' High x 28 LF*										
03 11 13.803		*10" CIP Wall*										
	0500	C.I.P. concrete forms, wall, wood bulkhead with 2 piece keyway, 1 use, includes erecting, bracing, stripping and cleaning	3.00	lf	31	10	-		-	-	13.793 /lf	41
	2550	C.I.P. concrete forms, wall, job built, plywood, over 8' to 16' high, 4 use, includes erecting, bracing, stripping and cleaning	84.00	sfca	586	83	-		-	-	7.962 /sfca	669
	5200	Chamfer strip, wood, 3/4" wide	5.00	lf	4	1	-		-	-	1.032 /lf	5
	1400	Tie cones, plastic, for coil tie system, for CIP wall forms, 1/2" bolt diameter x 1" setback length, includes material only	1.00	c	-	65	-		-	-	65.00 /c	65
n	3010	Waterstop, rubber, center bulb, 1/4" thick x 6" wide_WALLS	31.00	lf	100	233	-		-	-	10.733 /lf	333
	0100	Splice rebar, standard, self-aligning type, taper threaded, #4 bars, includes holding rebar in place while splicing	2.20	ea	19	28	-		-	-	21.373 /ea	47
n	2020	Reinforcing steel, unload and sort, add to base_WALLS	0.20	ton	7	-	-		4	-	56.80 /ton	11
n	2214	Reinforcing steel, crane cost for handling, average, add_WALLS	0.20	ton	8	-	-		5	-	61.75 /ton	12
	0700	Reinforcing steel, in place, walls, #3 to #7, A615, grade 60, incl labor for accessories, excl material for accessories	0.20	ton	138	290	-		-	-	2,138.550 /ton	428
	5100	Structural concrete, placing, walls, pumped, 12" thick, includes leveling (strike off) & consolidation, excludes material	2.00	cy	59	-	-		9	-	33.985 /cy	68
	5100	Structural concrete, placing, walls, pumped, 12" thick, includes leveling (strike off) & consolidation, excludes material	0.20	cy	6	-	-		1	-	34.00 /cy	7
n	0525	Struct WALLS concrete,ready mix,normal wt,4500 psi,includes local aggregate,sand,portland cement and water,delivered, includes all additives	0.20	cy	-	46	-		-	-	230.00 /cy	46
n	0525	Struct WALLS concrete,ready mix,normal wt,4500 psi,includes local aggregate,sand,portland cement and water,delivered, includes all additives	2.00	CY	-	460	-		-	-	230.00 /CY	460
n	0210	Control joint, clean out control joint of debris_WALLS	3.00	lf	0	-	-			-	0.073 /lf	0
n	0366	Control joint, joint sealant, polyurethane, 1/4" x 1/4" (308 LF/Gal)_WALLS	3.00	lf	5	0	-		-	-	1.79 /lf	5
	0020	Concrete finishing, walls, includes breaking ties and patching voids	84.00	sf	68	3	-		-	-	0.855 /sf	72

Central Kitsap Treatment Plant Solids Handling

Kitsap County

Detail Report - Direct Costs

Item		Description	Takeoff Qty		Labor Amount	Material Amount	Subcontract Amount	Name	Equipment Amount	Other Amount	Total Unit Cost	Total Amount
03 11 13.803		*10" CIP Wall*										
	0050	Concrete finishing, walls, burlap rub with grout, includes breaking ties and patching voids	42.00	sf	41	2	-		-	-	1.018 /sf	43
		03 11 13.803 10" CIP Wall			*1,073*	*1,221*			*19*		*1,156.215/CY*	*2,312*
		2.00 CY										
		18.639 Labor hours										
		0.513 Equipment hours										
		03 11 13.803.25 Concrete Stairway Vault Wall, 18' High x 28 LF			*1,073*	*1,221*	*0*		*19*	*0*	*1,156.215/CY*	*2,312*
		2.00 CY										
		18.639 Labor hours										
		0.513 Equipment hours										
03 11 13.804.60		*Centre BLDG Concrete Interior Wall, 12' High X 144 LF*										
03 11 13.804		*12" CIP Wall*										
	0500	C.I.P. concrete forms, wall, wood bulkhead with 2 piece keyway, 1 use, includes erecting, bracing, stripping and cleaning	87.00	lf	904	296	-		-	-	13.792 /lf	1,200
	2550	C.I.P. concrete forms, wall, job built, plywood, over 8' to 16' high, 4 use, includes erecting, bracing, stripping and cleaning	3,456.00	sfca	24,096	3,421	-		-	-	7.962 /sfca	27,517
	5200	Chamfer strip, wood, 3/4" wide	173.00	lf	154	24	-		-	-	1.033 /lf	179
	1400	Tie cones, plastic, for coil tie system, for CIP wall forms, 1/2" bolt diameter x 1" setback length, includes material only	3.00	c	-	195	-		-	-	65.00 /c	195
n	3010	Waterstop, rubber, center bulb, 1/4" thick x 6" wide_WALLS	231.00	lf	747	1,733	-		-	-	10.733 /lf	2,479
	0100	Splice rebar, standard, self-aligning type, taper threaded, #4 bars, includes holding rebar in place while splicing	70.40	ea	604	901	-		-	-	21.373 /ea	1,505
n	2020	Reinforcing steel, unload and sort, add to base_WALLS	6.40	ton	230	-	-		134	-	56.816 /ton	364
n	2214	Reinforcing steel, crane cost for handling, average, add_WALLS	6.40	ton	250	-	-		145	-	61.758 /ton	395
	0700	Reinforcing steel, in place, walls, #3 to #7, A615, grade 60, incl labor for accessories, excl material for accessories	6.40	ton	4,407	9,280	-		-	-	2,138.533 /ton	13,687
	5100	Structural concrete, placing, walls, pumped, 12" thick, includes leveling (strike off) & consolidation, excludes material	6.40	cy	189	-	-		29	-	33.983 /cy	217
	5100	Structural concrete, placing, walls, pumped, 12" thick, includes leveling (strike off) & consolidation, excludes material	64.00	cy	1,888	-	-		287	-	33.983 /cy	2,175
n	0525	Struct WALLS concrete,ready mix,normal wt,4500 psi,includes local aggregate,sand,portland cement and water,delivered, includes all additives	6.40	cy	-	1,472	-		-	-	230.00 /cy	1,472

Central Kitsap Treatment Plant Solids Handling

Kitsap County

Detail Report - Direct Costs

Item		Description	Takeoff Qty		Labor Amount	Material Amount	Subcontract Amount	Subcontract Name	Equipment Amount	Other Amount	Total Unit Cost	Total Amount
03 11 13.804		*12" CIP Wall*										
n	0525	Struct WALLS concrete,ready mix,normal wt,4500 psi,includes local aggregate,sand,portland cement and water,delivered, includes all additives	64.00	CY	-	14,720	-		-	-	230.00 /CY	14,720
n	0210	Control joint, clean out control joint of debris_WALLS	87.00	lf	6	-	-			-	0.073 /lf	6
n	0366	Control joint, joint sealant, polyurethane, 1/4" x 1/4" (308 LF/Gal)_WALLS	87.00	lf	142	14	-		-	-	1.790 /lf	156
	0020	Concrete finishing, walls, includes breaking ties and patching voids	3,456.00	sf	2,816	138	-		-	-	0.855 /sf	2,954
	0050	Concrete finishing, walls, burlap rub with grout, includes breaking ties and patching voids	1,728.00	sf	1,690	69	-		-	-	1.018 /sf	1,759
		03 11 13.804 12" CIP Wall			*38,122*	*32,263*			*595*		*1,109.057/CY*	*70,980*
		64.00 CY										
		664.285 Labor hours										
		16.429 Equipment hours										
		03 11 13.804.60 Centre BLDG Concrete Interior Wall, 12' High X 144 LF			*38,122*	*32,263*	*0*		*595*	*0*	*1,109.057/CY*	*70,980*
		64.00 CY										
		664.285 Labor hours										
		16.429 Equipment hours										
		DIVISION 03 CONCRETE			**68,607**	**73,761**	**0**		**2,545**	**0**	**868.302/CY**	**144,913**
		166.892 CY										
		1,195.481 Labor hours										
		68.589 Equipment hours										

DIVISION 05 METALS

05 50 00.450.05 Centrate Building - Ladder x 17 LF

05 50 00.450		*Metal Ladders - Aluminum*										
	0020	Ladder, shop fabricated, steel, 20" W, bolted to concrete, incl cage	17.00	LF	712	2,074	-		53	-	167.032 /LF	2,840
		05 50 00.450 Metal Ladders - Aluminum			*712*	*2,074*			*53*		*167.032/LF*	*2,840*
		17.00 LF										
		10.88 Labor hours										
		2.72 Equipment hours										
		05 50 00.450.05 Centrate Building - Ladder x 17 LF			*712*	*2,074*	*0*		*53*	*0*	*167.032/LF*	*2,840*
		17.00 LF										
		10.88 Labor hours										
		2.72 Equipment hours										

Central Kitsap Treatment Plant Solids Handling

Kitsap County

Detail Report - Direct Costs

Item	Description	Takeoff Qty		Labor Amount	Material Amount	Subcontract Amount	Subcontract Name	Equipment Amount	Other Amount	Total Unit Cost	Total Amount
	DIVISION 05 METALS			**712**	**2,074**	**0**		**53**	**0**	**2,839.54 /LS**	**2,840**
	1.00 LS										
	10.88 Labor hours										
	2.72 Equipment hours										
DIVISION 07	**THERMAL, MOISTURE PROTECTION**										
07 61 13.000.05	*Steel Roof Cover - Centre Tank x 2,219 SF*										
07 61 13.000	*Metal Roofing*										
0800	Aluminum coping, stock units, for 12" wall, excludes scaffolding	217.00	lf	2,260	501	-		-	-	12.725 /lf	2,761
0600	Open web bar joist, K Series, 40-ton job lots, 24K10, 13.1 plf, 30' to 50' spans, shop fabricated, incl shop primer, horizontal bridging	659.54	lf	1,551	7,783	-		635	-	15.114 /lf	9,968
2600	Metal roof decking, steel, open type B wide rib, galvanized, under 50 Sq, 1-1/2" D, 20 gauge	2,219.00	SF	1,203	6,258	-		90	-	3.403 /SF	7,550
2780	2" x 8" miscellaneous wood blocking, to steel construction, per M.B.F.	0.217	mbf	484	233	-		-	-	3,307.40 /mbf	718
0030	Underlayment, plywood, underlayment grade, 3/8" thick	2,219.00	sf	1,387	4,571	-		-	-	2.685 /sf	5,958
1725	Polyisocyanurate insulation, for roof decks, 2" thick, 2#/CF density, fastening excluded	2,219.00	sf	643	1,664	-		-	-	1.040 /sf	2,307
1745	Polyisocyanurate insulation, for roof decks, 3" thick, 2#/CF density, fastening excluded	2,219.00	sf	707	2,485	-		-	-	1.439 /sf	3,193
0825	Asphalt shingles, #30 felt underlayment	22.00	sq	157	191	-		-	-	15.845 /sq	349
4800	Ethylene-propylene-diene-monomer roofing, (EPDM), 0.40 psf, fully adhered with adhesive, 60 mils	22.00	sq	1,583	2,684	-		174	-	201.86 /sq	4,441
0100	Sheet metal flashing, aluminum, flexible, mill finish, .032" thick, including up to 4 bends	377.00	sf	1,077	1,598	-		-	-	7.098 /sf	2,676
	07 61 13.000 Metal Roofing			*11,054*	*27,969*			*898*		*17.991/SF*	*39,921*
	2,219.00 SF										
	201.441 Labor hours										
	18.557 Equipment hours										
	07 61 13.000.05 Steel Roof Cover - Centre Tank x 2,219 SF			*11,054*	*27,969*	*0*		*898*	*0*	*17.991/SF*	*39,921*
	2,219.00 SF										
	201.441 Labor hours										
	18.557 Equipment hours										
07 72 33.000.15	*Roof Hatch, 4' x 4'*										
07 72 33.000	*Roof Hatches*										

Central Kitsap Treatment Plant Solids Handling

Kitsap County

Detail Report - Direct Costs

Item		Description	Takeoff Qty		Labor Amount	Material Amount	Subcontract Amount	Subcontract Name	Equipment Amount	Other Amount	Total Unit Cost	Total Amount
07 72 33.000		*Roof Hatches*										
n	1120	Roof Hatches, with curb, 1" fiberglass insulation, galvanized steel curb and aluminum cover, 4' x 4'	1.00	EA	235	1,800	-		-	-	2,034.80 /EA	2,035
		07 72 33.000 Roof Hatches			*235*	*1,800*					*2,034.80 /EA*	*2,035*
		1.00 EA										
		4.00 Labor hours										
		07 72 33.000.15 Roof Hatch, 4' x 4'			*235*	*1,800*	*0*		*0*	*0*	*2,034.80 /EA*	*2,035*
		1.00 EA										
		4.00 Labor hours										
		DIVISION 07 THERMAL, MOISTURE PROTECTION			**11,289**	**29,769**	**0**		**898**	**0**	**18.908/SF**	**41,956**
		2,219.00 SF										
		205.441 Labor hours										
		18.557 Equipment hours										
DIVISION 31			**EARTHWORK**									
31.23.10.P005		*Excavation, Backfill, and Haul Off-Site*										
31 23 10.000		*Excavation, Backfill, and Haul Off-Site*										
n	6260	Strt excvt for minor strtr,bank measr,for sprd and mat ftngs,elvtr pits,and small bldng fndtn,sandy clay loam,2 cy bucket,machin excvtn,hydrlc backhoe	1,755.00	CY	7,381	-	-		8,223	-	8.891 /CY	15,604
	4010	Backfill, structural, sandy clay & loam, 200 H.P. dozer, 50' haul, from existing stockpile, excludes compaction	335.00	CY	95	-	-		220	-	0.942 /CY	316
	4060	Borrow, common earth, 1-1/2 C.Y. bucket, loading and/or spreading, front end loader, wheel-mounted	335.00	CY	239	2,680	-		156	-	9.179 /CY	3,075
n	0560	Hauling,excavated borrow material,loose cubic yards,20 mile round trip,0.4 load/hr,base wide rate,12 cy truck,highway haulers,excludes loading	1,770.00	CY	20,133	-	-		27,661	-	27.002 /CY	47,794
	0400	Compaction, structural, select fill, 8" lifts, sheepsfoot or wobbly wheel roller	335.00	CY	155	-	-		320	-	1.418 /CY	475
		31 23 10.000 Excavation, Backfill, and Haul Off-Site			*28,003*	*2,680*			*36,580*		*14.848/CY*	*67,263*
		4,530.00 CY										
		501.555 Labor hours										
		433.730 Equipment hours										
		31.23.10.P005 Excavation, Backfill, and Haul Off-Site			*28,003*	*2,680*	*0*		*36,580*	*0*	*14.848/CY*	*67,263*
		4,530.00 CY										
		501.555 Labor hours										

AACE Classification Accuracy Range

Upper Range +50% **Lower Range -30%**

Central Kitsap Treatment Plant Solids Handling

Kitsap County

Detail Report - Direct Costs

Item		Description	Takeoff Qty		Labor Amount	Material Amount	Subcontract Amount	Name	Equipment Amount	Other Amount	Total Unit Cost	Total Amount
		31.23.10.P005 Excavation, Backfill, and Haul Off-Site			*28,003*	*2,680*	*0*		*36,580*	*0*	*14.848/CY*	*67,263*
		4,530.00 CY										
		501.555 Labor hours										
		433.730 Equipment hours										
31.23.19.P030		*Well Point Detwatering - 8 Months*										
31 23 19.020		*Dewatering - Wellpoint*										
n	1300	Wellpoints,complete installation,2"wellpoints,5'oc, 500'long header,8"diameter,includes one month operation,equipment rental,fuel and removal system	500.00	hdr	89,859	27,000	-		-	-	233.718 /hdr	116,859
	1400	Wellpoints, each additional month, 2" wellpoints, 5' O.C., 500' long header, 8" diameter, includes operation, equipment rental, and fuel	3,500.00	hdr	319,770	134,750	-		-	-	129.863 /hdr	454,520
		31 23 19.020 Dewatering - Wellpoint			*409,629*	*161,750*					*71,422.416/MO*	*571,379*
		8.00 MO										
		6,861.463 Labor hours										
		31.23.19.P030 Well Point Detwatering - 8 Months			*409,629*	*161,750*	*0*		*0*	*0*	*71,422.416/MO*	*571,379*
		8.00 MO										
		6,861.463 Labor hours										
		DIVISION 31 EARTHWORK			**437,633**	**164,430**	**0**		**36,580**	**0**	**140.981/CY**	**638,643**
		4,530.00 CY										
		7,363.018 Labor hours										
		433.730 Equipment hours										
DIVISION 46		**WATER AND WASTEWATER EQUIPMENT**										
46 13 01.005.05		*Fabricated Aluminum Tank Covers, 2,219 SF*										
46 13 01.005		*Aluminum Covers: Flat*										
	0105	Aluminum Tank Covers	2,219.00	SF			332,850			-	150.00 /SF	332,850
		46 13 01.005 Aluminum Covers: Flat					*332,850*				*150.00 /SF*	*332,850*
		2,219.00 SF										
		46 13 01.005.05 Fabricated Aluminum Tank Covers, 2,219 SF			*0*	*0*	*332,850*		*0*	*0*	*150.00 /SF*	*332,850*
		2,219.00 SF										

AACE Classification Accuracy Range

Upper Range +50% **Lower Range -30%**

Central Kitsap Treatment Plant Solids Handling

Kitsap County

Detail Report - Direct Costs

Item	Description	Takeoff Qty		Labor Amount	Material Amount	Subcontract Amount	Name	Equipment Amount	Other Amount	Total Unit Cost	Total Amount
	DIVISION 46 WATER AND WASTEWATER EQUIPMENT			**0**	**0**	**332,850**		**0**	**0**	**332,850.00 /EA**	**332,850**
	1.00 EA										
	500 CENTRATE STORAGE - EXISTING GRAV THICKENER			***518,241***	***270,034***	***332,850***		***40,077***	***0***	***1,161,201.02 /LS***	***1,161,201***
	1.00 LS										
	8,774.821 Labor hours										
	523.596 Equipment hours										

546 EXISTING SOLIDS PROCESSING BUILDING

DIVISION 46 WATER AND WASTEWATER EQUIPMENT

43.23.50.010 Centrate pumps 1, 2

43 23 50.000	*Pumping Equipment - Centrate*										
n 00160037007	Centrifugal pump 250 gpm	2.00	EA	2,706	44,000	-		1,737	-	24,221.76 /EA	48,444
	43 23 50.000 Pumping Equipment - Centrate			*2,706*	*44,000*			*1,737*		*24,221.76 /EA*	*48,444*
	2.00 EA										
	48.00 Labor hours										
	16.00 Equipment hours										
	43.23.50.010 Centrate pumps 1, 2			*2,706*	*44,000*	*0*		*1,737*	*0*	*24,221.76 /EA*	*48,444*
	2.00 EA										
	48.00 Labor hours										
	16.00 Equipment hours										

43.23.50.012 Centrate overflow pumps 1, 2

43 23 50.000	*Pumping Equipment - Centrate*										
n 00160037007	Centrifugal pump 150 gpm	2.00	EA	2,706	30,000	-		1,737	-	17,221.760 /EA	34,444
	43 23 50.000 Pumping Equipment - Centrate			*2,706*	*30,000*			*1,737*		*17,221.760/EA*	*34,444*
	2.00 EA										
	48.00 Labor hours										
	16.00 Equipment hours										
	43.23.50.012 Centrate overflow pumps 1, 2			*2,706*	*30,000*	*0*		*1,737*	*0*	*17,221.760/EA*	*34,444*
	2.00 EA										
	48.00 Labor hours										

Central Kitsap Treatment Plant Solids Handling

Kitsap County

Detail Report - Direct Costs

Item	Description	Takeoff Qty	Labor Amount	Material Amount	Subcontract Amount	Subcontract Name	Equipment Amount	Other Amount	Total Unit Cost	Total Amount
	43.23.50.012 Centrate overflow pumps 1, 2		*2,706*	*30,000*	*0*		*1,737*	*0*	*17,221.760/EA*	*34,444*
	2.00 EA									
	48.00 Labor hours									
	16.00 Equipment hours									
	DIVISION 46 WATER AND WASTEWATER EQUIPMENT		**5,412**	**74,000**	**0**		**3,475**	**0**	**20,721.760/EA**	**82,887**
	4.00 EA									
	96.00 Labor hours									
	32.00 Equipment hours									
	546 EXISTING SOLIDS PROCESSING BUILDING		***5,412***	***74,000***	***0***		***3,475***	***0***	***82,887.040/LS***	***82,887***
	1.00 LS									
	96.00 Labor hours									
	32.00 Equipment hours									

547 PRIMARY SLUDGE & SEPTAGE BUILDING

DIVISION 03 CONCRETE

03 11 13.303.15 Elevated Roof Slab, 12" Thick x 5,258 SF

03 11 13.303		*12" Elevated Slab*									
	3050	C.I.P. concrete forms, slab on grade, edge, wood, 7" to 12" high, 4 use, includes erecting, bracing, stripping and cleaning	290.048	sfca	1,190	354	-	-	-	5.322 /sfca	1,544
n	9015	C.I.P. concrete forms, bulkhead for slab on grade w/ keyway, up to 12", exp metal, includes erecting, bracing, stripping and cleaning	262.900	sfca	642	118	-	-	-	2.894 /sfca	761
n	2050	Reinforcing steel, unload and sort, add to base_SLAB ON GRADE	17.063	ton	614	-	-	356	-	56.816 /ton	969
	0600	Reinforcing steel, in place, slab on grade, #3 to #7, A615, grade 60, incl labor for accessories, excl material for accessories	17.063	ton	15,324	24,741	-	-	-	2,348.087 /ton	40,065
	2220	Reinforcing steel, crane cost for handling, 90 picks/day, up to 0.5 Ton/day	17.063	ton	1,753	-	-	1,017	-	162.331 /ton	2,770
	4650	Structural concrete, placing, slab on grade, pumped, over 6" thick, includes leveling (strike off) & consolidation, excludes material	19.50	cy	342	-	-	52	-	20.206 /cy	394
	4650	Structural concrete, placing, slab on grade, pumped, over 6" thick, includes leveling (strike off) & consolidation, excludes material	195.00	cy	3,420	-	-	520	-	20.206 /cy	3,940

Central Kitsap Treatment Plant Solids Handling

Kitsap County

Detail Report - Direct Costs

	Item	Description	Takeoff Qty		Labor Amount	Material Amount	Subcontract Amount	Subcontract Name	Equipment Amount	Other Amount	Total Unit Cost	Total Amount
03 11 13.303		*12" Elevated Slab*										
n	0725	Struct SLAB ON GRADE concrete,ready mix,normal wt,4500 psi,includes local aggregate,sand,portland cement and water,delivered, includes all additives	195.00	CY	-	44,850	-		-	-	230.00 /CY	44,850
n	0725	Struct SLAB ON GRADE concrete,ready mix,normal wt,4500 psi,includes local aggregate,sand,portland cement and water,delivered, includes all additives	19.50	cy	-	4,485	-		-	-	230.00 /cy	4,485
n	0255	Concrete finishing, floors, manual screed, bull float, machine float & steel trowel (walk-behind)_SOG	5,257.99	sf	3,856	-	-		283	-	0.787 /sf	4,139
n	0122	Control joint, concrete floor slab, sawcut in green concrete, 1" depth_SOG	262.900	lf	116	8	-		16	-	0.529 /lf	139
n	0215	Control joint, clean out control joint of debris_SOG	262.900	lf	19	-	-			-	0.073 /lf	19
n	0367	Control joint, joint sealant, polyurethane, 1/4" x 1/4" (308 LF/Gal)_SOG	525.799	lf	857	84	-		-	-	1.790 /lf	941
n	0310	Concrete surface treatment, curing, sprayed membrane compound_SOG	52.58	csf	418	392	-		-	-	15.408 /csf	810
	1200	Vapor retarders, building paper, polyethylene vapor barrier, standard, 10 mil (.010" thick)	52.58	sq	666	429	-		-	-	20.820 /sq	1,095
n	1310	Fill, gravel fill, compacted, under floor slabs, alternate pricing method, 12" deep_SOG	224.00	ecy	2,443	7,168	-		277	-	44.143 /ecy	9,888
n	1136	Hauling, excavated borrow material, loose cubic yards, 20 mile round trip, 0.4 loads/hour, 16.5 c.y. dump trailer, highway haulers, excludes loading	224.00	lcy	1,840	-	-		2,780	-	20.626 /lcy	4,620
		03 11 13.303 12" Elevated Slab			*33,500*	*82,629*			*5,301*		*622.718/CY*	*121,430*
		195.00 CY										
		575.191 Labor hours 133.162 Equipment hours										
		03 11 13.303.15 Elevated Roof Slab, 12" Thick x 5,258 SF			*33,500*	*82,629*	*0*		*5,301*	*0*	*622.718/CY*	*121,430*
		195.00 CY										
		575.191 Labor hours 133.162 Equipment hours										
03 11 13.504.05		*1st Floor Slab, 12" Thick x 5,258 SF*										
03 11 13.504		*12" Slab on Grade*										
	3050	C.I.P. concrete forms, slab on grade, edge, wood, 7" to 12" high, 4 use, includes erecting, bracing, stripping and cleaning	290.048	sfca	1,190	354	-		-	-	5.322 /sfca	1,544
n	9015	C.I.P. concrete forms, bulkhead for slab on grade w/ keyway, up to 12", exp metal, includes erecting, bracing, stripping and cleaning	262.900	sfca	642	118	-		-	-	2.894 /sfca	761
n	2050	Reinforcing steel, unload and sort, add to base_SLAB ON GRADE	17.063	ton	614	-	-		356	-	56.816 /ton	969

Central Kitsap Treatment Plant Solids Handling

Kitsap County

Detail Report - Direct Costs

	Item	Description	Takeoff Qty		Labor Amount	Material Amount	Subcontract Amount	Subcontract Name	Equipment Amount	Other Amount	Total Unit Cost	Total Amount
03 11 13.504		*12" Slab on Grade*										
	0600	Reinforcing steel, in place, slab on grade, #3 to #7, A615, grade 60, incl labor for accessories, excl material for accessories	17.063	ton	15,324	24,741	-		-	-	2,348.087 /ton	40,065
	2220	Reinforcing steel, crane cost for handling, 90 picks/day, up to 0.5 Ton/day	17.063	ton	1,753	-	-		1,017	-	162.331 /ton	2,770
	4650	Structural concrete, placing, slab on grade, pumped, over 6" thick, includes leveling (strike off) & consolidation, excludes material	19.50	cy	342	-	-		52	-	20.206 /cy	394
	4650	Structural concrete, placing, slab on grade, pumped, over 6" thick, includes leveling (strike off) & consolidation, excludes material	195.00	cy	3,420	-	-		520	-	20.206 /cy	3,940
n	0725	Struct SLAB ON GRADE concrete,ready mix,normal wt,4500 psi,includes local aggregate,sand,portland cement and water,delivered, includes all additives	19.50	cy	-	4,485	-		-	-	230.00 /cy	4,485
n	0725	Struct SLAB ON GRADE concrete,ready mix,normal wt,4500 psi,includes local aggregate,sand,portland cement and water,delivered, includes all additives	195.00	CY	-	44,850	-		-	-	230.00 /CY	44,850
n	0255	Concrete finishing, floors, manual screed, bull float, machine float & steel trowel (walk-behind)_SOG	5,257.99	sf	3,856	-	-		283	-	0.787 /sf	4,139
n	0122	Control joint, concrete floor slab, sawcut in green concrete, 1" depth_SOG	262.900	lf	116	8	-		16	-	0.529 /lf	139
n	0215	Control joint, clean out control joint of debris_SOG	262.900	lf	19	-	-			-	0.073 /lf	19
n	0367	Control joint, joint sealant, polyurethane, 1/4" x 1/4" (308 LF/Gal)_SOG	525.799	lf	857	84	-		-	-	1.790 /lf	941
n	0310	Concrete surface treatment, curing, sprayed membrane compound_SOG	52.58	csf	418	392	-		-	-	15.408 /csf	810
	1200	Vapor retarders, building paper, polyethylene vapor barrier, standard, 10 mil (.010" thick)	52.58	sq	666	429	-		-	-	20.820 /sq	1,095
n	1310	Fill, gravel fill, compacted, under floor slabs, alternate pricing method, 12" deep_SOG	224.00	ecy	2,443	7,168	-		277	-	44.143 /ecy	9,888
n	1136	Hauling, excavated borrow material, loose cubic yards, 20 mile round trip, 0.4 loads/hour, 16.5 c.y. dump trailer, highway haulers, excludes loading	224.00	lcy	1,840	-	-		2,780	-	20.626 /lcy	4,620
		03 11 13.504 12" Slab on Grade			*33,500*	*82,629*			*5,301*		*622.718/CY*	*121,430*
		195.00 CY										
		575.191 Labor hours 133.162 Equipment hours										
		03 11 13.504.05 1st Floor Slab, 12" Thick x 5,258 SF			*33,500*	*82,629*	*0*		*5,301*	*0*	*622.718/CY*	*121,430*
		195.00 CY										
		575.191 Labor hours 133.162 Equipment hours										
03 11 13.504.10		*Buried Slab, 12" Thick x 1,589 SF*										

AACE Classification Accuracy Range

Upper Range +50% **Lower Range -30%**

Central Kitsap Treatment Plant Solids Handling

Kitsap County

Detail Report - Direct Costs

	Item	Description	Takeoff Qty		Labor Amount	Material Amount	Subcontract Amount	Subcontract Name	Equipment Amount	Other Amount	Total Unit Cost	Total Amount
03 11 13.504		*12" Slab on Grade*										
	3050	C.I.P. concrete forms, slab on grade, edge, wood, 7" to 12" high, 4 use, includes erecting, bracing, stripping and cleaning	157.448	sfca	646	192	-		-	-	5.322 /sfca	838
n	9015	C.I.P. concrete forms, bulkhead for slab on grade w/ keyway, up to 12", exp metal, includes erecting, bracing, stripping and cleaning	77.456	sfca	189	35	-		-	-	2.894 /sfca	224
n	2050	Reinforcing steel, unload and sort, add to base_SLAB ON GRADE	5.075	ton	182	-	-		106	-	56.816 /ton	288
	0600	Reinforcing steel, in place, slab on grade, #3 to #7, A615, grade 60, incl labor for accessories, excl material for accessories	5.075	ton	4,558	7,359	-		-	-	2,348.087 /ton	11,917
	2220	Reinforcing steel, crane cost for handling, 90 picks/day, up to 0.5 Ton/day	5.075	ton	521	-	-		302	-	162.331 /ton	824
	4650	Structural concrete, placing, slab on grade, pumped, over 6" thick, includes leveling (strike off) & consolidation, excludes material	5.80	cy	102	-	-		15	-	20.207 /cy	117
	4650	Structural concrete, placing, slab on grade, pumped, over 6" thick, includes leveling (strike off) & consolidation, excludes material	58.00	cy	1,017	-	-		155	-	20.206 /cy	1,172
n	0725	Struct SLAB ON GRADE concrete,ready mix,normal wt,4500 psi,includes local aggregate,sand,portland cement and water,delivered, includes all additives	5.80	cy	-	1,334	-		-	-	230.00 /cy	1,334
n	0725	Struct SLAB ON GRADE concrete,ready mix,normal wt,4500 psi,includes local aggregate,sand,portland cement and water,delivered, includes all additives	58.00	CY	-	13,340	-		-	-	230.00 /CY	13,340
n	0255	Concrete finishing, floors, manual screed, bull float, machine float & steel trowel (walk-behind)_SOG	1,549.117	sf	1,136	-	-		84	-	0.787 /sf	1,220
n	0122	Control joint, concrete floor slab, sawcut in green concrete, 1" depth_SOG	77.456	lf	34	2	-		5	-	0.529 /lf	41
n	0215	Control joint, clean out control joint of debris_SOG	77.456	lf	6	-	-			-	0.073 /lf	6
n	0367	Control joint, joint sealant, polyurethane, 1/4" x 1/4" (308 LF/Gal)_SOG	154.912	lf	252	25	-		-	-	1.790 /lf	277
n	0310	Concrete surface treatment, curing, sprayed membrane compound_SOG	15.491	csf	123	115	-		-	-	15.408 /csf	239
	1200	Vapor retarders, building paper, polyethylene vapor barrier, standard, 10 mil (.010" thick)	15.491	sq	196	126	-		-	-	20.821 /sq	323
n	1310	Fill, gravel fill, compacted, under floor slabs, alternate pricing method, 12" deep_SOG	66.00	ecy	720	2,112	-		82	-	44.143 /ecy	2,913
n	1136	Hauling, excavated borrow material, loose cubic yards, 20 mile round trip, 0.4 loads/hour, 16.5 c.y. dump trailer, highway haulers, excludes loading	66.00	lcy	542	-	-		819	-	20.626 /lcy	1,361
		03 11 13.504 12" Slab on Grade			*10,225*	*24,640*			*1,567*		*628.161/CY*	*36,433*

58.00 CY

175.740 Labor hours
39.327 Equipment hours

AACE Classification Accuracy Range

Upper Range +50% **Lower Range -30%**

Central Kitsap Treatment Plant Solids Handling

Kitsap County

Detail Report - Direct Costs

Item		Description	Takeoff Qty		Labor Amount	Material Amount	Subcontract Amount	Subcontract Name	Equipment Amount	Other Amount	Total Unit Cost	Total Amount
		03 11 13.504.10 Buried Slab, 12" Thick x 1,589 SF			*10,225*	*24,640*	*0*		*1,567*	*0*	*628.161/CY*	*36,433*
		58.00 CY										
		175.740 Labor hours										
		39.327 Equipment hours										
03 11 13.804.20		*Concrete Wall, 16' High x 12" Thick x 397 LF*										
03 11 13.804		*12" CIP Wall*										
	0500	C.I.P. concrete forms, wall, wood bulkhead with 2 piece keyway, 1 use, includes erecting, bracing, stripping and cleaning	318.00	lf	3,305	1,081	-		-	-	13.792 /lf	4,386
	2550	C.I.P. concrete forms, wall, job built, plywood, over 8' to 16' high, 4 use, includes erecting, bracing, stripping and cleaning	12,704.00	sfca	88,574	12,577	-		-	-	7.962 /sfca	101,151
	5200	Chamfer strip, wood, 3/4" wide	636.00	lf	568	89	-		-	-	1.033 /lf	657
	1400	Tie cones, plastic, for coil tie system, for CIP wall forms, 1/2" bolt diameter x 1" setback length, includes material only	11.00	c	-	715	-		-	-	65.00 /c	715
n	3010	Waterstop, rubber, center bulb, 1/4" thick x 6" wide_WALLS	715.00	lf	2,312	5,363	-		-	-	10.733 /lf	7,674
	0100	Splice rebar, standard, self-aligning type, taper threaded, #4 bars, includes holding rebar in place while splicing	259.600	ea	2,225	3,323	-		-	-	21.373 /ea	5,548
n	2020	Reinforcing steel, unload and sort, add to base_WALLS	23.60	ton	849	-	-		492	-	56.816 /ton	1,341
n	2214	Reinforcing steel, crane cost for handling, average, add_WALLS	23.60	ton	922	-	-		535	-	61.758 /ton	1,457
	0700	Reinforcing steel, in place, walls, #3 to #7, A615, grade 60, incl labor for accessories, excl material for accessories	23.60	ton	16,249	34,220	-		-	-	2,138.534 /ton	50,469
	5100	Structural concrete, placing, walls, pumped, 12" thick, includes leveling (strike off) & consolidation, excludes material	23.60	cy	696	-	-		106	-	33.983 /cy	802
	5100	Structural concrete, placing, walls, pumped, 12" thick, includes leveling (strike off) & consolidation, excludes material	236.00	cy	6,961	-	-		1,059	-	33.983 /cy	8,020
n	0525	Struct WALLS concrete,ready mix,normal wt,4500 psi,includes local aggregate,sand,portland cement and water,delivered, includes all additives	23.60	cy	-	5,428	-		-	-	230.00 /cy	5,428
n	0525	Struct WALLS concrete,ready mix,normal wt,4500 psi,includes local aggregate,sand,portland cement and water,delivered, includes all additives	236.00	CY	-	54,280	-		-	-	230.00 /CY	54,280
n	0210	Control joint, clean out control joint of debris_WALLS	318.00	lf	23	-	-			-	0.073 /lf	23
n	0366	Control joint, joint sealant, polyurethane, 1/4" x 1/4" (308 LF/Gal)_WALLS	318.00	lf	518	51	-		-	-	1.790 /lf	569
	0020	Concrete finishing, walls, includes breaking ties and patching voids	12,704.00	sf	10,351	508	-		-	-	0.855 /sf	10,860

Central Kitsap Treatment Plant Solids Handling

Kitsap County

Detail Report - Direct Costs

	Item	Description	Takeoff Qty		Labor Amount	Material Amount	Subcontract Amount	Subcontract Name	Equipment Amount	Other Amount	Total Unit Cost	Total Amount
03 11 13.804		*12" CIP Wall*										
	0050	Concrete finishing, walls, burlap rub with grout, includes breaking ties and patching voids	6,352.00	sf	6,211	254	-		-	-	1.018 /sf	6,465
		03 11 13.804 12" CIP Wall			*139,765*	*117,889*			*2,193*		*1,101.043/CY*	*259,846*
		236.00 CY										
		2,435.569 Labor hours										
		60.580 Equipment hours										
		03 11 13.804.20 Concrete Wall, 16' High x 12" Thick x 397 LF			*139,765*	*117,889*	*0*		*2,193*	*0*	*1,101.043/CY*	*259,846*
		236.00 CY										
		2,435.569 Labor hours										
		60.580 Equipment hours										
03 11 13.804.25		*Grade Wall, 1' High x 12" Thick x 397 LF*										
03 11 13.804		*12" CIP Wall*										
	0500	C.I.P. concrete forms, wall, wood bulkhead with 2 piece keyway, 1 use, includes erecting, bracing, stripping and cleaning	20.00	lf	208	68	-		-	-	13.793 /lf	276
	2550	C.I.P. concrete forms, wall, job built, plywood, over 8' to 16' high, 4 use, includes erecting, bracing, stripping and cleaning	794.00	sfca	5,536	786	-		-	-	7.962 /sfca	6,322
	5200	Chamfer strip, wood, 3/4" wide	40.00	lf	36	6	-		-	-	1.033 /lf	41
	1400	Tie cones, plastic, for coil tie system, for CIP wall forms, 1/2" bolt diameter x 1" setback length, includes material only	1.00	c	-	65	-		-	-	65.00 /c	65
n	3010	Waterstop, rubber, center bulb, 1/4" thick x 6" wide_WALLS	417.00	lf	1,348	3,128	-		-	-	10.733 /lf	4,476
	0100	Splice rebar, standard, self-aligning type, taper threaded, #4 bars, includes holding rebar in place while splicing	16.50	ea	141	211	-		-	-	21.373 /ea	353
n	2020	Reinforcing steel, unload and sort, add to base_WALLS	1.50	ton	54	-	-		31	-	56.81 /ton	85
n	2214	Reinforcing steel, crane cost for handling, average, add_WALLS	1.50	ton	59	-	-		34	-	61.75 /ton	93
	0700	Reinforcing steel, in place, walls, #3 to #7, A615, grade 60, incl labor for accessories, excl material for accessories	1.50	ton	1,033	2,175	-		-	-	2,138.530 /ton	3,208
	5100	Structural concrete, placing, walls, pumped, 12" thick, includes leveling (strike off) & consolidation, excludes material	1.50	cy	44	-	-		7	-	33.98 /cy	51
	5100	Structural concrete, placing, walls, pumped, 12" thick, includes leveling (strike off) & consolidation, excludes material	15.00	cy	442	-	-		67	-	33.983 /cy	510
n	0525	Struct WALLS concrete,ready mix,normal wt,4500 psi,includes local aggregate,sand,portland cement and water,delivered, includes all additives	1.50	cy	-	345	-		-	-	230.00 /cy	345

Central Kitsap Treatment Plant Solids Handling

Kitsap County

Detail Report - Direct Costs

Item		Description	Takeoff Qty		Labor Amount	Material Amount	Subcontract Amount	Subcontract Name	Equipment Amount	Other Amount	Total Unit Cost	Total Amount
03 11 13.804		*12" CIP Wall*										
n	0525	Struct WALLS concrete,ready mix,normal wt,4500 psi,includes local aggregate,sand,portland cement and water,delivered, includes all additives	15.00	CY	-	3,450	-		-	-	230.00 /CY	3,450
n	0210	Control joint, clean out control joint of debris_WALLS	20.00	lf	1	-	-			-	0.073 /lf	1
n	0366	Control joint, joint sealant, polyurethane, 1/4" x 1/4" (308 LF/Gal)_WALLS	20.00	lf	33	3	-		-	-	1.790 /lf	36
	0020	Concrete finishing, walls, includes breaking ties and patching voids	794.00	sf	647	32	-		-	-	0.855 /sf	679
	0050	Concrete finishing, walls, burlap rub with grout, includes breaking ties and patching voids	397.00	sf	388	16	-		-	-	1.018 /sf	404
		03 11 13.804 12" CIP Wall			*9,970*	*10,284*			*139*		*1,359.587/CY*	*20,394*
		15.00 CY										
		173.296 Labor hours										
		3.850 Equipment hours										
		03 11 13.804.25 Grade Wall, 1' High x 12" Thick x 397 LF			*9,970*	*10,284*	*0*		*139*	*0*	*1,359.587/CY*	*20,394*
		15.00 CY										
		173.296 Labor hours										
		3.850 Equipment hours										
03 41 33.000.25		*Double Tee Roof x 5,258 SF*										
03 41 33.000		*Precast and Prestressed Concrete*										
	0300	Precast tees, double, floor, 30' span, prestressed	5,257.99	SF	5,067	74,926	-		2,644	-	15.717 /SF	82,638
		03 41 33.000 Precast and Prestressed Concrete			*5,067*	*74,926*			*2,644*		*15.717/SF*	*82,638*
		5,257.99 SF										
		78.870 Labor hours										
		8.763 Equipment hours										
		03 41 33.000.25 Double Tee Roof x 5,258 SF			*5,067*	*74,926*	*0*		*2,644*	*0*	*15.717/SF*	*82,638*
		5,257.99 SF										
		78.870 Labor hours										
		8.763 Equipment hours										
		DIVISION 03 CONCRETE			**232,028**	**392,997**	**0**		**17,146**	**0**	**918.700/CY**	**642,171**
		699.00 CY										
		4,013.856 Labor hours										
		378.845 Equipment hours										

DIVISION 07 **THERMAL, MOISTURE PROTECTION**

Central Kitsap Treatment Plant Solids Handling

Kitsap County

Detail Report - Direct Costs

Item	Description	Takeoff Qty		Labor Amount	Material Amount	Subcontract Amount	Subcontract Name	Equipment Amount	Other Amount	Total Unit Cost	Total Amount
07 51 00.000.25	*Built Up Roofing System PVC x 5,258 SF*										
07 51 00.000	*Built-Up Roofing System (BUR)*										
0800	Aluminum coping, stock units, for 12" wall, excludes scaffolding	334.00	lf	4,696	1,042	-		-	-	17.18 /lf	5,738
2780	2" x 8" miscellaneous wood blocking, to steel construction, per M.B.F.	1.334	mbf	4,020	1,936	-		-	-	4,464.99 /mbf	5,956
2780	2" x 8" miscellaneous wood blocking, to steel construction, per M.B.F.	0.334	mbf	1,007	485	-		-	-	4,464.940 /mbf	1,491
2700	Elastomeric sheet waterproofing, polyvinyl chloride sheets, plain, 30 mils thick	5,258.00	SF	10,512	1,634	-		-	-	2.31 /SF	12,146
1725	Polyisocyanurate insulation, for roof decks, 2" thick, 2#/CF density, fastening excluded	5,258.00	sf	2,052	5,310	-		-	-	1.40 /sf	7,361
1745	Polyisocyanurate insulation, for roof decks, 3" thick, 2#/CF density, fastening excluded	5,258.00	sf	2,260	7,941	-		-	-	1.94 /sf	10,201
0825	Asphalt shingles, #30 felt underlayment	53.00	sq	511	622	-		-	-	21.390 /sq	1,134
0100	Sheet metal flashing, aluminum, flexible, mill finish, .032" thick, including up to 4 bends	580.00	sf	2,237	3,319	-		-	-	9.580 /sf	5,556
	07 51 00.000 Built-Up Roofing System (BUR)			*27,296*	*22,288*					*9.430/SF*	*49,583*
	5,258.00 SF										
	515.203 Labor hours										
	07 51 00.000.25 Built Up Roofing System PVC x 5,258 SF			*27,296*	*22,288*	*0*		*0*	*0*	*9.430/SF*	*49,583*
	5,258.00 SF										
	515.203 Labor hours										
	DIVISION 07 THERMAL, MOISTURE PROTECTION			**27,296**	**22,288**	**0**		**0**	**0**	**9.430/SF**	**49,583**
	5,258.00 SF										
	515.203 Labor hours										
DIVISION 08	**OPENINGS**										
08 11 00.030.20	*(PRIMARY SEP) - Exterior Door, 3' x 7'*										
08 11 00.030	*Metal Doors & Frames (3070)*										
1000	Frames, steel, knock down, hollow metal, single, 16 ga., up to 4-7/8" deep, 3'-0" x 7'-0"	2.00	EA	117	390	-		-	-	253.60 /EA	507
5050	Doors, aluminum, commercial entrance, flush panel doors, single, 3'-0" x 7'-0", incl. hinges, push/pull, deadlock, cylinder, threshold, excl. glazing	2.00	ea	826	1,720	-		-	-	1,273.120 /ea	2,546
3000	Door hardware, panic device, narrow stile, mortise bar, exit only	2.00	ea	234	1,200	-		-	-	717.20 /ea	1,434
0011	Thresholds, aluminum, 3' long door saddles	6.00	lf	59	72	-		-	-	21.817 /lf	131

AACE Classification Accuracy Range

Upper Range +50% **Lower Range -30%**

Central Kitsap Treatment Plant Solids Handling

Kitsap County

Detail Report - Direct Costs

Item		Description	Takeoff Qty		Labor Amount	Material Amount	Subcontract Amount	Name	Equipment Amount	Other Amount	Total Unit Cost	Total Amount
08 11 00.030		*Metal Doors & Frames (3070)*										
	1430	Door hardware, hinges, full mortise, high frequency, brass base, US10, 4-1/2" x 4-1/2"	3.00	pr	-	182	-		-	-	60.50 /pr	182
	1200	Paints & coatings, exterior, door & frame, one side, flush, 1 coat, 3' x 7'	2.00	ea	47	5	-		-	-	25.655 /ea	51
		08 11 00.030 Metal Doors & Frames (3070)			*1,283*	*3,568*					*2,425.775/EA*	*4,852*
		2.00 EA										
		20.741 Labor hours										
		08 11 00.030.20 (PRIMARY SEP) - Exterior Door, 3' x 7'			*1,283*	*3,568*	*0*		*0*	*0*	*2,425.775/EA*	*4,852*
		2.00 EA										
		20.741 Labor hours										
08 11 00.060.20		*(PRIMARY SEP) - Exterior Door, 6' x 7'*										
08 11 00.060		*Metal Doors & Frames (6070)*										
	3620	Frames, steel, knock down, hollow metal, 14 gauge, up to 5-3/4" D, 7'-0" H, 6'-0" W, double	2.00	EA	156	470	-		-	-	313.135 /EA	626
	5100	Doors, aluminum, commercial entrance, flush panel doors, pair of, 3'-0" x 7'-0", incl. hinges, push/pull, deadlock, cylinder, threshold, excl. glazing	2.00	pr	1,033	3,250	-		-	-	2,141.40 /pr	4,283
	3000	Door hardware, panic device, narrow stile, mortise bar, exit only	4.00	ea	469	2,400	-		-	-	717.20 /ea	2,869
	0011	Thresholds, aluminum, 3' long door saddles	12.00	lf	117	145	-		-	-	21.817 /lf	262
	1430	Door hardware, hinges, full mortise, high frequency, brass base, US10, 4-1/2" x 4-1/2"	6.00	pr	-	363	-		-	-	60.50 /pr	363
	1200	Paints & coatings, exterior, door & frame, one side, flush, 1 coat, 3' x 7'	4.00	ea	93	9	-		-	-	25.655 /ea	103
		08 11 00.060 Metal Doors & Frames (6070)			*1,869*	*6,637*					*4,252.645/EA*	*8,505*
		2.00 EA										
		30.549 Labor hours										
		08 11 00.060.20 (PRIMARY SEP) - Exterior Door, 6' x 7'			*1,869*	*6,637*	*0*		*0*	*0*	*4,252.645/EA*	*8,505*
		2.00 EA										
		30.549 Labor hours										
08 36 13.000.20		*Overhead Door, 14' x 14'*										
08 36 13.000		*Overhead Door - Sectional Aluminum*										
	0500	Doors, rolling service, steel, manual, 20 gauge, 14' x 14' high, incl. hardware	2.00	EA	2,582	6,450	-		-	-	4,516.00 /EA	9,032
	3300	Doors, rolling service, steel, manual, for enamel finish, add	392.00	sf	-	862	-		-	-	2.20 /sf	862
	3700	Doors, rolling service, steel, manual, for safety edge bottom bar, electric, add	28.00	lf	-	1,260	-		-	-	45.00 /lf	1,260

Central Kitsap Treatment Plant Solids Handling

Kitsap County

Detail Report - Direct Costs

Item		Description	Takeoff Qty		Labor Amount	Material Amount	Subcontract Amount	Name	Equipment Amount	Other Amount	Total Unit Cost	Total Amount
08 36 13.000		*Overhead Door - Sectional Aluminum*										
	4000	Doors, rolling service, steel, manual, for weatherstripping, extruded rubber, jambs, add	84.00	lf	-	1,319	-		-	-	15.70 /lf	1,319
	4500	Doors, rolling service, steel, manual, motor operators for, to 14' x 14' opening	2.00	ea	413	2,400	-		-	-	1,406.56 /ea	2,813
	4700	Doors, rolling service, steel, manual, for fire door, additional fusible link, add	4.00	ea	-	124	-		-	-	31.00 /ea	124
		08 36 13.000 Overhead Door - Sectional Aluminum			*2,995*	*12,415*					*7,705.16 /EA*	*15,410*
		2.00 EA										
		46.40 Labor hours										
		08 36 13.000.20 Overhead Door, 14' x 14'			*2,995*	*12,415*	*0*		*0*	*0*	*7,705.16 /EA*	*15,410*
		2.00 EA										
		46.40 Labor hours										
		DIVISION 08 OPENINGS			**6,147**	**22,620**	**0**		**0**	**0**	**4,794.527/EA**	**28,767**
		6.00 EA										
		97.690 Labor hours										

DIVISION 31 EARTHWORK

31.23.10.P005 *Excavation, Backfill, and Haul Off-Site*

31 23 10.000		*Excavation, Backfill, and Haul Off-Site*										
n	6260	Strt excvt for minor strtr,bank measr,for sprd and mat ftngs,elvtr pits,and small bldng fndtn,sandy clay loam,2 cy bucket,machin excvtn,hydrlc backhoe	1,270.00	CY	5,341	-	-		5,950	-	8.891 /CY	11,292
	4010	Backfill, structural, sandy clay & loam, 200 H.P. dozer, 50' haul, from existing stockpile, excludes compaction	565.00	CY	161	-	-		371	-	0.942 /CY	532
	4060	Borrow, common earth, 1-1/2 C.Y. bucket, loading and/or spreading, front end loader, wheel-mounted	565.00	CY	404	4,520	-		262	-	9.179 /CY	5,186
n	0560	Hauling,excavated borrow material,loose cubic yards,20 mile round trip,0.4 load/hr,base wide rate,12 cy truck,highway haulers,excludes loading	885.00	CY	10,066	-	-		13,831	-	27.002 /CY	23,897
	0400	Compaction, structural, select fill, 8" lifts, sheepsfoot or wobbly wheel roller	565.00	CY	261	-	-		540	-	1.418 /CY	801
		31 23 10.000 Excavation, Backfill, and Haul Off-Site			*16,233*	*4,520*			*20,955*		*10.833/CY*	*41,708*
		3,850.00 CY										
		289.908 Labor hours										
		238.106 Equipment hours										

Central Kitsap Treatment Plant Solids Handling

Kitsap County

Detail Report - Direct Costs

Item	Description	Takeoff Qty		Labor Amount	Material Amount	Subcontract Amount	Name	Equipment Amount	Other Amount	Total Unit Cost	Total Amount
	31.23.10.P005 Excavation, Backfill, and Haul Off-Site			*16,233*	*4,520*	*0*		*20,955*	*0*	*10.833/CY*	*41,708*
	3,850.00 CY										
	289.908 Labor hours										
	238.106 Equipment hours										
	DIVISION 31 EARTHWORK			**16,233**	**4,520**	**0**		**20,955**	**0**	**10.833/CY**	**41,708**
	3,850.00 CY										
	289.908 Labor hours										
	238.106 Equipment hours										
DIVISION 46		**WATER AND WASTEWATER EQUIPMENT**									
43.23.57.015	*Thickened Stream Pumps and Diversion Header*										
43 23 57.000	*Progressive Cavity Pumps*										
n 0010	Allowance - diversion system	1.00	EA	8,706	60,000	-		3,120		71,826.00 /EA	71,826
n 0010	Progressive cavity feed pumps pump 40 hp	4.00	EA	23,216	200,000	-		8,320		57,884.00 /EA	231,536
	43 23 57.000 Progressive Cavity Pumps			*31,922*	*260,000*			*11,440*		*60,672.40 /EA*	*303,362*
	5.00 EA										
	440.00 Labor hours										
	88.00 Equipment hours										
	43.23.57.015 Thickened Stream Pumps and Diversion Header			*31,922*	*260,000*	*0*		*11,440*	*0*	*60,672.40 /EA*	*303,362*
	5.00 EA										
	440.00 Labor hours										
	88.00 Equipment hours										
43.23.57.023	*Solids stream*										
43 23 57.010	*Pumps NOC*										
n 0010	Solids Stream Feed System - allowacne	2.00	EA	11,608	70,000	-		4,160		42,884.00 /EA	85,768
	43 23 57.010 Pumps NOC			*11,608*	*70,000*			*4,160*			*85,768*
	160.00 Labor hours										
	32.00 Equipment hours										
	43.23.57.023 Solids stream			*11,608*	*70,000*	*0*		*4,160*	*0*		*85,768*
	160.00 Labor hours										
	32.00 Equipment hours										
43.25.53.005	*Polymer Activation System*										
43 25 53.000	*Pumping Equipment - Chemical Feed/Metering*										
0020	Poly tank, high density polyethylene, 1,250 gallon	3.00	ea	579	5,175	-		75	-	1,943.04 /ea	5,829

AACE Classification Accuracy Range

Upper Range +50% **Lower Range -30%**

Central Kitsap Treatment Plant Solids Handling

Kitsap County

Detail Report - Direct Costs

Item		Description	Takeoff Qty		Labor Amount	Material Amount	Subcontract Amount	Subcontract Name	Equipment Amount	Other Amount	Total Unit Cost	Total Amount
43 25 53.000		*Pumping Equipment - Chemical Feed/Metering*										
	0010	Polymer mixing and feed skid, 10gph, skid mounted w/ control	2.00	EA	8,474	150,000	-			450	79,461.900 /EA	158,924
	0010	Polymer feed pumps	3.00	EA	5,260	60,000	-			540	21,933.20 /EA	65,800
		43 25 53.000 Pumping Equipment - Chemical Feed/Metering			*14,312*	*215,175*			*75*	*990*	*46,110.504/EA*	*230,553*
		5.00 EA										
		198.50 Labor hours										
		1.50 Equipment hours										
		43.25.53.005 Polymer Activation System			*14,312*	*215,175*	*0*		*75*	*990*		*230,553*
		198.50 Labor hours										
		1.50 Equipment hours										
43.41.43.005		*Tote mixer*										
43 41 43.000		*Tanks - Polyethylene Chemical Tanks*										
	9900	Tote mixer w/ scale	2.00	EA	1,169	10,000	-			160	5,664.40 /EA	11,329
		43 41 43.000 Tanks - Polyethylene Chemical Tanks			*1,169*	*10,000*				*160*		*11,329*
		16.00 Labor hours										
		43.41.43.005 Tote mixer			*1,169*	*10,000*	*0*		*0*	*160*	*5,664.40 /EA*	*11,329*
		2.00 EA										
		16.00 Labor hours										
46.24.23.005		*Inline Sludge Grinder*										
46 24 23.000		*Sludge Grinders*										
	0001	Inline Grinders	1.00	EA	1,725	13,500	-		230	-	15,455.00 /EA	15,455
		46 24 23.000 Sludge Grinders			*1,725*	*13,500*			*230*		*15,455.00 /EA*	*15,455*
		1.00 EA										
		46.24.23.005 Inline Sludge Grinder			*1,725*	*13,500*	*0*		*230*	*0*	*15,455.00 /EA*	*15,455*
		1.00 EA										
46.41.00.010		*Flocculation Tank Mixer*										
46 41 00.000		*Submersible Mixers*										
	0010	Tank Mixer, submersible compact unit	3.00	EA	14,026	114,000	-			1,077	43,034.20 /EA	129,103
		46 41 00.000 Submersible Mixers			*14,026*	*114,000*				*1,077*	*43,034.20 /EA*	*129,103*
		3.00 EA										
		192.00 Labor hours										
		46.41.00.010 Flocculation Tank Mixer			*14,026*	*114,000*	*0*		*0*	*1,077*	*43,034.20 /EA*	*129,103*
		3.00 EA										

AACE Classification Accuracy Range

Upper Range +50% **Lower Range -30%**

Central Kitsap Treatment Plant Solids Handling

Kitsap County

Detail Report - Direct Costs

Item		Description	Takeoff Qty		Labor Amount	Material Amount	Subcontract Amount	Name	Equipment Amount	Other Amount	Total Unit Cost	Total Amount
		46.41.00.010 Flocculation Tank Mixer			*14,026*	*114,000*	*0*		*0*	*1,077*	*43,034.20 /EA*	*129,103*
		3.00 EA										
		192.00 Labor hours										
46.71.33.005		*Rotary Drum Thickener*										
46 71 33.000		*Rotary Drum Sludge Thickening System*										
n	0010	Rotary drum thickener, FDC RST-775X3600L	3.00	EA	32,463	675,000	-		16,200	1,797	241,820.06 /EA	725,460
		46 71 33.000 Rotary Drum Sludge Thickening System			*32,463*	*675,000*			*16,200*	*1,797*	*241,820.06 /EA*	*725,460*
		3.00 EA										
		540.00 Labor hours										
		540.00 Equipment hours										
		46.71.33.005 Rotary Drum Thickener			*32,463*	*675,000*	*0*		*16,200*	*1,797*	*241,820.06 /EA*	*725,460*
		3.00 EA										
		540.00 Labor hours										
		540.00 Equipment hours										
		DIVISION 46 WATER AND WASTEWATER EQUIPMENT			**107,225**	**1,357,675**	**0**		**32,105**	**4,024**	**71,477.576/EA**	**1,501,029**
		21.00 EA										
		1,546.50 Labor hours										
		661.50 Equipment hours										
		547 PRIMARY SLUDGE & SEPTAGE BUILDING			***388,929***	***1,800,100***	***0***		***70,206***	***4,024***	***430.441/BSF***	***2,263,259***
		5,258.00 BSF										
		6,463.158 Labor hours										
		1,278.451 Equipment hours										

599 DIGESTERS 1&2 - EXISTING

DIVISION 03 CONCRETE

03 11 13.803.10		*Concrete Tank Wall, Add Tanks Wall Height - Allowance*										
03 11 13.803		*10" CIP Wall*										
	0500	C.I.P. concrete forms, wall, wood bulkhead with 2 piece keyway, 1 use, includes erecting, bracing, stripping and cleaning	630.00	lf	6,547	2,142	-		-	-	13.792 /lf	8,689

AACE Classification Accuracy Range

Upper Range +50% **Lower Range -30%**

Central Kitsap Treatment Plant Solids Handling

Kitsap County

Detail Report - Direct Costs

	Item	Description	Takeoff Qty		Labor Amount	Material Amount	Subcontract Amount	Subcontract Name	Equipment Amount	Other Amount	Total Unit Cost	Total Amount
03 11 13.803		*10" CIP Wall*										
	2550	C.I.P. concrete forms, wall, job built, plywood, over 8' to 16' high, 4 use, includes erecting, bracing, stripping and cleaning	25,200.00	sfca	175,698	24,948	-		-	-	7.962 /sfca	200,646
	5200	Chamfer strip, wood, 3/4" wide	1,260.00	lf	1,125	176	-		-	-	1.033 /lf	1,302
	1400	Tie cones, plastic, for coil tie system, for CIP wall forms, 1/2" bolt diameter x 1" setback length, includes material only	21.00	c	-	1,365	-		-	-	65.00 /c	1,365
n	3010	Waterstop, rubber, center bulb, 1/4" thick x 6" wide_WALLS	1,050.00	lf	3,395	7,875	-		-	-	10.733 /lf	11,270
	0100	Splice rebar, standard, self-aligning type, taper threaded, #4 bars, includes holding rebar in place while splicing	855.80	ea	7,336	10,954	-		-	-	21.373 /ea	18,291
n	2020	Reinforcing steel, unload and sort, add to base_WALLS	77.80	ton	2,797	-	-		1,623	-	56.816 /ton	4,420
n	2214	Reinforcing steel, crane cost for handling, average, add_WALLS	77.80	ton	3,041	-	-		1,764	-	61.758 /ton	4,805
	0700	Reinforcing steel, in place, walls, #3 to #7, A615, grade 60, incl labor for accessories, excl material for accessories	77.80	ton	53,568	112,810	-		-	-	2,138.533 /ton	166,378
	5100	Structural concrete, placing, walls, pumped, 12" thick, includes leveling (strike off) & consolidation, excludes material	778.00	cy	22,947	-	-		3,492	-	33.983 /cy	26,439
	5100	Structural concrete, placing, walls, pumped, 12" thick, includes leveling (strike off) & consolidation, excludes material	77.80	cy	2,295	-	-		349	-	33.983 /cy	2,644
n	0525	Struct WALLS concrete,ready mix,normal wt,4500 psi,includes local aggregate,sand,portland cement and water,delivered, includes all additives	778.00	CY	-	178,940	-		-	-	230.00 /CY	178,940
n	0525	Struct WALLS concrete,ready mix,normal wt,4500 psi,includes local aggregate,sand,portland cement and water,delivered, includes all additives	77.80	cy	-	17,894	-		-	-	230.00 /cy	17,894
n	0210	Control joint, clean out control joint of debris_WALLS	630.00	lf	46	-	-			-	0.073 /lf	46
n	0366	Control joint, joint sealant, polyurethane, 1/4" x 1/4" (308 LF/Gal)_WALLS	630.00	lf	1,027	101	-		-	-	1.790 /lf	1,127
	0020	Concrete finishing, walls, includes breaking ties and patching voids	25,200.00	sf	20,533	1,008	-		-	-	0.855 /sf	21,541
	0050	Concrete finishing, walls, burlap rub with grout, includes breaking ties and patching voids	12,600.00	sf	12,320	504	-		-	-	1.018 /sf	12,824
		03 11 13.803 10" CIP Wall			*312,675*	*358,717*			*7,228*		*872.263/CY*	*678,621*
		778.00 CY										
		5,433.205 Labor hours										
		199.709 Equipment hours										
		03 11 13.803.10 Concrete Tank Wall, Add Tanks Wall Height - Allowance			*312,675*	*358,717*	*0*		*7,228*	*0*	*872.263/CY*	*678,621*
		778.00 CY										
		5,433.205 Labor hours										

AACE Classification Accuracy Range

Upper Range +50% **Lower Range -30%**

Central Kitsap Treatment Plant Solids Handling

Kitsap County

Detail Report - Direct Costs

Item	Description	Takeoff Qty		Labor Amount	Material Amount	Subcontract Amount	Name	Equipment Amount	Other Amount	Total Unit Cost	Total Amount
	03 11 13.803.10 Concrete Tank Wall, Add Tanks Wall Height - Allowance			*312,675*	*358,717*	*0*		*7,228*	*0*	*872.263/CY*	*678,621*
	778.00 CY										
	5,433.205 Labor hours										
	199.709 Equipment hours										
	DIVISION 03 CONCRETE			**312,675**	**358,717**	**0**		**7,228**	**0**	**872.263/CY**	**678,621**
	778.00 CY										
	5,433.205 Labor hours										
	199.709 Equipment hours										
DIVISION 13	**SPECIAL CONSTRUCTION**										
13.61.02.010	*Fixed Steel Cover*										
13 61 02.000	*Digester Cover*										
9103	Remove existing digester cover for replacement	1.00	ea	36,083				18,000	-	54,083.20 /ea	54,083
9103	Structural framing, roof cover, flat, fixed roof, gas tight	2.00	ea			1,120,000			-	560,000.00 /ea	1,120,000
9103	Install digester fixed cover	2.00	ea	38,338		30,000		28,000	-	48,169.20 /ea	96,338
	13 61 02.000 Digester Cover			*74,422*		*1,150,000*		*46,000*			*1,270,422*
	1,320.00 Labor hours										
	240.00 Equipment hours										
	13.61.02.010 Fixed Steel Cover			*74,422*	*0*	*1,150,000*		*46,000*	*0*		*1,270,422*
	1,320.00 Labor hours										
	240.00 Equipment hours										
	DIVISION 13 SPECIAL CONSTRUCTION			**74,422**	**0**	**1,150,000**		**46,000**	**0**		**1,270,422**
	1,320.00 Labor hours										
	240.00 Equipment hours										
DIVISION 46	**WATER AND WASTEWATER EQUIPMENT**										
43.23.57.010	*Septage Equalization Pumps*										
43 23 57.000	*Progressive Cavity Pumps*										
n 0010	Progressive cavity transfer pump	2.00	EA	11,608	70,000	-		4,160		42,884.00 /EA	85,768
n 0010	Feed flow control valve system	1.00	LS	3,482	80,000	-		880		84,362.40 /LS	84,362
	43 23 57.000 Progressive Cavity Pumps			*15,090*	*150,000*			*5,040*		*85,065.20 /EA*	*170,130*
	2.00 EA										
	208.00 Labor hours										
	48.00 Equipment hours										

AACE Classification Accuracy Range

Upper Range +50% **Lower Range -30%**

Central Kitsap Treatment Plant Solids Handling

Kitsap County

Detail Report - Direct Costs

Item		Description	Takeoff Qty		Labor Amount	Material Amount	Subcontract Amount	Subcontract Name	Equipment Amount	Other Amount	Total Unit Cost	Total Amount
		43.23.57.010 Septage Equalization Pumps			*15,090*	*150,000*	*0*		*5,040*	*0*	*85,065.20 /EA*	*170,130*
		2.00 EA										
		208.00 Labor hours										
		48.00 Equipment hours										
43.23.57.037		*Centrifuge feed and transfer pumps*										
43 23 57.000		*Progressive Cavity Pumps*										
n	0010	Progressive cavity feed pumps pump 40 hp	4.00	EA	23,216	200,000	-		8,320		57,884.00 /EA	231,536
		43 23 57.000 Progressive Cavity Pumps			*23,216*	*200,000*			*8,320*		*57,884.00 /EA*	*231,536*
		4.00 EA										
		320.00 Labor hours										
		64.00 Equipment hours										
		43.23.57.037 Centrifuge feed and transfer pumps			*23,216*	*200,000*	*0*		*8,320*	*0*	*57,884.00 /EA*	*231,536*
		4.00 EA										
		320.00 Labor hours										
		64.00 Equipment hours										
43.23.58.010		*Sludge Recirc Pumps*										
43 23 58.000		*Rotary Lobe Pumps*										
	1000	Rotary Lobe pumps	2.00	ea	3,527	50,706	-		804	-	27,518.89 /ea	55,038
	1000	rem: all the other costs	0.00	ea	0	0	-		0	-		
		43 23 58.000 Rotary Lobe Pumps			*3,527*	*50,706*			*804*			*55,038*
		64.00 Labor hours										
		16.00 Equipment hours										
		43.23.58.010 Sludge Recirc Pumps			*3,527*	*50,706*	*0*		*804*	*0*		*55,038*
		64.00 Labor hours										
		16.00 Equipment hours										
46.73.33.010		*Rotamix Mix System*										
46 73 33.010		*Digester Mixing System*										
	0008	Mixing Assembly w/ Chopper pumps	3.00	ea	27,062	276,000	-		15,272		106,111.38 /ea	318,334
	0008	Rotamix Spare parts	2.00	ea		36,000	-				18,000.00 /ea	36,000
	0008	Rotating sub-assembly	1.00	ea		17,000	-				17,000.00 /ea	17,000
		46 73 33.010 Digester Mixing System			*27,062*	*329,000*			*15,272*			*371,334*
		480.00 Labor hours										
		180.00 Equipment hours										
		46.73.33.010 Rotamix Mix System			*27,062*	*329,000*	*0*		*15,272*	*0*		*371,334*
		480.00 Labor hours										
		180.00 Equipment hours										

Central Kitsap Treatment Plant Solids Handling

Kitsap County

Detail Report - Direct Costs

Item		Description	Takeoff Qty		Labor Amount	Material Amount	Subcontract Amount	Name	Equipment Amount	Other Amount	Total Unit Cost	Total Amount
46.73.41.010		*Heat Exchanger - Recirc Digested Sludge*										
46 73 41.020		*Digester - Heat Exchanger*										
	0100	Digester, Heat Exchangers	2.00	EA	9,360	70,000			5,760		42,560.00 /EA	85,120
		46 73 41.020 Digester - Heat Exchanger			*9,360*	*70,000*			*5,760*			*85,120*
		144.00 Labor hours										
		144.00 Equipment hours										
		46.73.41.010 Heat Exchanger - Recirc Digested Sludge			*9,360*	*70,000*	*0*		*5,760*	*0*	*42,560.00 /EA*	*85,120*
		2.00 EA										
		144.00 Labor hours										
		144.00 Equipment hours										
		DIVISION 46 WATER AND WASTEWATER EQUIPMENT			**78,256**	**799,706**	**0**		**35,196**	**0**	**114,144.79 /EA**	**913,158**
		8.00 EA										
		1,216.00 Labor hours										
		452.00 Equipment hours										
		599 DIGESTERS 1&2 - EXISTING			***465,353***	***1,158,423***	***1,150,000***		***88,424***	***0***	***2,201,692.646/MG***	***2,862,200***
		1.30 MG										
		7,969.205 Labor hours										
		891.709 Equipment hours										

600 DIGESTERS 3&4 - NEW W/ CONTROL BUILDING

DIVISION 03 CONCRETE

03 11 13.154.25		*Concrete Tank Footing, 30" High x 67" Thick x 422 LF*										
03 11 13.154		*Cont. Footing 60" x 18"*										
	3050	C.I.P. concrete forms, slab on grade, edge, wood, 7" to 12" high, 4 use, includes erecting, bracing, stripping and cleaning	2,137.915	sfca	8,770	2,608	-		-	-	5.322 /sfca	11,378
n	9015	C.I.P. concrete forms, bulkhead for slab on grade w/ keyway, up to 12", exp metal, includes erecting, bracing, stripping and cleaning	294.503	sfca	720	133	-		-	-	2.894 /sfca	852
n	2050	Reinforcing steel, unload and sort, add to base_SLAB ON GRADE	19.163	ton	689	-	-		400	-	56.816 /ton	1,089
	0600	Reinforcing steel, in place, slab on grade, #3 to #7, A615, grade 60, incl labor for accessories, excl material for accessories	19.163	ton	17,210	27,786	-		-	-	2,348.087 /ton	44,996

Central Kitsap Treatment Plant Solids Handling

Kitsap County

Detail Report - Direct Costs

	Item	Description	Takeoff Qty		Labor Amount	Material Amount	Subcontract Amount	Subcontract Name	Equipment Amount	Other Amount	Total Unit Cost	Total Amount
03 11 13.154		*Cont. Footing 60" x 18"*										
	2220	Reinforcing steel, crane cost for handling, 90 picks/day, up to 0.5 Ton/day	19.163	ton	1,969	-	-		1,142	-	162.331 /ton	3,111
	4650	Structural concrete, placing, slab on grade, pumped, over 6" thick, includes leveling (strike off) & consolidation, excludes material	21.90	cy	384	-	-		58	-	20.206 /cy	443
	4650	Structural concrete, placing, slab on grade, pumped, over 6" thick, includes leveling (strike off) & consolidation, excludes material	219.00	cy	3,841	-	-		584	-	20.206 /cy	4,425
n	0725	Struct SLAB ON GRADE concrete,ready mix,normal wt,4500 psi,includes local aggregate,sand,portland cement and water,delivered, includes all additives	21.90	cy	-	5,037	-		-	-	230.00 /cy	5,037
n	0725	Struct SLAB ON GRADE concrete,ready mix,normal wt,4500 psi,includes local aggregate,sand,portland cement and water,delivered, includes all additives	219.00	CY	-	50,370	-		-	-	230.00 /CY	50,370
n	0255	Concrete finishing, floors, manual screed, bull float, machine float & steel trowel (walk-behind)_SOG	2,356.026	sf	1,728	-	-		127	-	0.787 /sf	1,855
n	0122	Control joint, concrete floor slab, sawcut in green concrete, 1" depth_SOG	117.801	lf	52	4	-		7	-	0.529 /lf	62
n	0215	Control joint, clean out control joint of debris_SOG	117.801	lf	9	-	-			-	0.073 /lf	9
n	0367	Control joint, joint sealant, polyurethane, 1/4" x 1/4" (308 LF/Gal)_SOG	235.603	lf	384	38	-		-	-	1.790 /lf	422
n	0310	Concrete surface treatment, curing, sprayed membrane compound_SOG	23.56	csf	187	176	-		-	-	15.408 /csf	363
	1200	Vapor retarders, building paper, polyethylene vapor barrier, standard, 10 mil (.010" thick)	23.56	sq	299	192	-		-	-	20.82 /sq	491
n	1310	Fill, gravel fill, compacted, under floor slabs, alternate pricing method, 12" deep_SOG	100.00	ecy	1,091	3,200	-		124	-	44.143 /ecy	4,414
n	1136	Hauling, excavated borrow material, loose cubic yards, 20 mile round trip, 0.4 loads/hour, 16.5 c.y. dump trailer, highway haulers, excludes loading	100.00	lcy	821	-	-		1,241	-	20.626 /lcy	2,063
		03 11 13.154 Cont. Footing 60" x 18"			*38,152*	*89,543*			*3,683*		*599.903/CY*	*131,379*
		219.00 CY										
		648.259 Labor hours										
		81.881 Equipment hours										
		03 11 13.154.25 Concrete Tank Footing, 30" High x 67" Thick x 422 LF			*38,152*	*89,543*	*0*		*3,683*	*0*	*599.903/CY*	*131,379*
		219.00 CY										
		648.259 Labor hours										
		81.881 Equipment hours										

03 11 13.154.30 *Concrete Stairway Footing, 36" High x 10" Wide x 54 LF*

03 11 13.154 *Cont. Footing 60" x 18"*

Central Kitsap Treatment Plant Solids Handling

Kitsap County

Detail Report - Direct Costs

	Item	Description	Takeoff Qty		Labor Amount	Material Amount	Subcontract Amount	Subcontract Name	Equipment Amount	Other Amount	Total Unit Cost	Total Amount
03 11 13.154		*Cont. Footing 60" x 18"*										
	3050	C.I.P. concrete forms, slab on grade, edge, wood, 7" to 12" high, 4 use, includes erecting, bracing, stripping and cleaning	328.998	sfca	1,350	401	-		-	-	5.322 /sfca	1,751
n	9015	C.I.P. concrete forms, bulkhead for slab on grade w/ keyway, up to 12", exp metal, includes erecting, bracing, stripping and cleaning	6.747	sfca	16	3	-		-	-	2.895 /sfca	20
n	2050	Reinforcing steel, unload and sort, add to base_SLAB ON GRADE	0.438	ton	16	-	-		9	-	56.83 /ton	25
	0600	Reinforcing steel, in place, slab on grade, #3 to #7, A615, grade 60, incl labor for accessories, excl material for accessories	0.438	ton	393	635	-		-	-	2,348.08 /ton	1,028
	2220	Reinforcing steel, crane cost for handling, 90 picks/day, up to 0.5 Ton/day	0.438	ton	45	-	-		26	-	162.330 /ton	71
	4650	Structural concrete, placing, slab on grade, pumped, over 6" thick, includes leveling (strike off) & consolidation, excludes material	0.50	cy	9	-	-		1	-	20.20 /cy	10
	4650	Structural concrete, placing, slab on grade, pumped, over 6" thick, includes leveling (strike off) & consolidation, excludes material	5.00	cy	88	-	-		13	-	20.206 /cy	101
n	0725	Struct SLAB ON GRADE concrete,ready mix,normal wt,4500 psi,includes local aggregate,sand,portland cement and water,delivered, includes all additives	0.50	cy	-	115	-		-	-	230.00 /cy	115
n	0725	Struct SLAB ON GRADE concrete,ready mix,normal wt,4500 psi,includes local aggregate,sand,portland cement and water,delivered, includes all additives	5.00	CY	-	1,150	-		-	-	230.00 /CY	1,150
n	0255	Concrete finishing, floors, manual screed, bull float, machine float & steel trowel (walk-behind)_SOG	44.982	sf	33	-	-		2	-	0.787 /sf	35
n	0122	Control joint, concrete floor slab, sawcut in green concrete, 1" depth_SOG	2.249	lf	1	0	-		0	-	0.53 /lf	1
n	0215	Control joint, clean out control joint of debris_SOG	2.249	lf	0	-	-			-	0.07 /lf	0
n	0367	Control joint, joint sealant, polyurethane, 1/4" x 1/4" (308 LF/Gal)_SOG	4.498	lf	7	1	-		-	-	1.79 /lf	8
n	0310	Concrete surface treatment, curing, sprayed membrane compound_SOG	0.45	csf	4	3	-		-	-	15.40 /csf	7
	1200	Vapor retarders, building paper, polyethylene vapor barrier, standard, 10 mil (.010" thick)	0.45	sq	6	4	-		-	-	20.822 /sq	9
n	1310	Fill, gravel fill, compacted, under floor slabs, alternate pricing method, 12" deep_SOG	2.00	ecy	22	64	-		2	-	44.14 /ecy	88
n	1136	Hauling, excavated borrow material, loose cubic yards, 20 mile round trip, 0.4 loads/hour, 16.5 c.y. dump trailer, highway haulers, excludes loading	2.00	lcy	16	-	-		25	-	20.625 /lcy	41
		03 11 13.154 Cont. Footing 60" x 18"			*2,006*	*2,376*			*80*		*892.344/CY*	*4,462*

5.00 CY

35.130 Labor hours
1.733 Equipment hours

AACE Classification Accuracy Range

Upper Range +50% **Lower Range -30%**

Central Kitsap Treatment Plant Solids Handling

Kitsap County

Detail Report - Direct Costs

Item		Description	Takeoff Qty		Labor Amount	Material Amount	Subcontract Amount	Name	Equipment Amount	Other Amount	Total Unit Cost	Total Amount
		03 11 13.154.30 Concrete Stairway Footing, 36" High x 10" Wide x 54 LF			*2,006*	*2,376*	*0*		*80*	*0*	*892.344/CY*	*4,462*
		5.00 CY										
		35.130 Labor hours										
		1.733 Equipment hours										
03 11 13.154.35		*Concrete Footing, 36" High x 24' Wide x 144 LF*										
03 11 13.154		*Cont. Footing 60" x 18"*										
	3050	C.I.P. concrete forms, slab on grade, edge, wood, 7" to 12" high, 4 use, includes erecting, bracing, stripping and cleaning	876.00	sfca	3,593	1,069	-		-	-	5.322 /sfca	4,662
n	9015	C.I.P. concrete forms, bulkhead for slab on grade w/ keyway, up to 12", exp metal, includes erecting, bracing, stripping and cleaning	43.20	sfca	106	19	-		-	-	2.894 /sfca	125
n	2050	Reinforcing steel, unload and sort, add to base_SLAB ON GRADE	2.80	ton	101	-	-		58	-	56.818 /ton	159
	0600	Reinforcing steel, in place, slab on grade, #3 to #7, A615, grade 60, incl labor for accessories, excl material for accessories	2.80	ton	2,515	4,060	-		-	-	2,348.086 /ton	6,575
	2220	Reinforcing steel, crane cost for handling, 90 picks/day, up to 0.5 Ton/day	2.80	ton	288	-	-		167	-	162.332 /ton	455
	4650	Structural concrete, placing, slab on grade, pumped, over 6" thick, includes leveling (strike off) & consolidation, excludes material	3.20	cy	56	-	-		9	-	20.206 /cy	65
	4650	Structural concrete, placing, slab on grade, pumped, over 6" thick, includes leveling (strike off) & consolidation, excludes material	32.00	cy	561	-	-		85	-	20.206 /cy	647
n	0725	Struct SLAB ON GRADE concrete,ready mix,normal wt,4500 psi,includes local aggregate,sand,portland cement and water,delivered, includes all additives	32.00	CY	-	7,360	-		-	-	230.00 /CY	7,360
n	0725	Struct SLAB ON GRADE concrete,ready mix,normal wt,4500 psi,includes local aggregate,sand,portland cement and water,delivered, includes all additives	3.20	cy	-	736	-		-	-	230.00 /cy	736
n	0255	Concrete finishing, floors, manual screed, bull float, machine float & steel trowel (walk-behind)_SOG	288.00	sf	211	-	-		16	-	0.787 /sf	227
n	0122	Control joint, concrete floor slab, sawcut in green concrete, 1" depth_SOG	14.40	lf	6	0	-		1	-	0.529 /lf	8
n	0215	Control joint, clean out control joint of debris_SOG	14.40	lf	1	-	-			-	0.073 /lf	1
n	0367	Control joint, joint sealant, polyurethane, 1/4" x 1/4" (308 LF/Gal)_SOG	28.80	lf	47	5	-		-	-	1.790 /lf	52
n	0310	Concrete surface treatment, curing, sprayed membrane compound_SOG	2.88	csf	23	21	-		-	-	15.41 /csf	44
	1200	Vapor retarders, building paper, polyethylene vapor barrier, standard, 10 mil (.010" thick)	2.88	sq	36	23	-		-	-	20.82 /sq	60
n	1310	Fill, gravel fill, compacted, under floor slabs, alternate pricing method, 12" deep_SOG	12.00	ecy	131	384	-		15	-	44.143 /ecy	530

AACE Classification Accuracy Range

Upper Range +50% **Lower Range -30%**

Central Kitsap Treatment Plant Solids Handling

Kitsap County

Detail Report - Direct Costs

Item		Description	Takeoff Qty		Labor Amount	Material Amount	Subcontract Amount	Subcontract Name	Equipment Amount	Other Amount	Total Unit Cost	Total Amount
03 11 13.154		*Cont. Footing 60" x 18"*										
n	1136	Hauling, excavated borrow material, loose cubic yards, 20 mile round trip, 0.4 loads/hour, 16.5 c.y. dump trailer, highway haulers, excludes loading	12.00	lcy	99	-	-		149	-	20.626 /lcy	248
		03 11 13.154 Cont. Footing 60" x 18"			*7,774*	*13,678*			*499*		*685.974/CY*	*21,951*
		32.00 CY										
		134.037 Labor hours										
		10.822 Equipment hours										
		03 11 13.154.35 Concrete Footing, 36" High x 24' Wide x 144 LF			*7,774*	*13,678*	*0*		*499*	*0*	*685.974/CY*	*21,951*
		32.00 CY										
		134.037 Labor hours										
		10.822 Equipment hours										
03 11 13.300.10		*Concrete Stairway Elevated Slab, 12" Thick x 2,341 SF*										
03 11 13.303		*12" Elevated Slab*										
	3050	C.I.P. concrete forms, slab on grade, edge, wood, 7" to 12" high, 4 use, includes erecting, bracing, stripping and cleaning	193.536	sfca	794	236	-		-	-	5.322 /sfca	1,030
n	9015	C.I.P. concrete forms, bulkhead for slab on grade w/ keyway, up to 12", exp metal, includes erecting, bracing, stripping and cleaning	117.051	sfca	286	53	-		-	-	2.894 /sfca	339
n	2050	Reinforcing steel, unload and sort, add to base_SLAB ON GRADE	7.613	ton	274	-	-		159	-	56.816 /ton	433
	0600	Reinforcing steel, in place, slab on grade, #3 to #7, A615, grade 60, incl labor for accessories, excl material for accessories	7.613	ton	6,837	11,039	-		-	-	2,348.087 /ton	17,876
	2220	Reinforcing steel, crane cost for handling, 90 picks/day, up to 0.5 Ton/day	7.613	ton	782	-	-		454	-	162.330 /ton	1,236
	4650	Structural concrete, placing, slab on grade, pumped, over 6" thick, includes leveling (strike off) & consolidation, excludes material	8.70	cy	153	-	-		23	-	20.207 /cy	176
	4650	Structural concrete, placing, slab on grade, pumped, over 6" thick, includes leveling (strike off) & consolidation, excludes material	87.00	cy	1,526	-	-		232	-	20.206 /cy	1,758
n	0725	Struct SLAB ON GRADE concrete,ready mix,normal wt,4500 psi,includes local aggregate,sand,portland cement and water,delivered, includes all additives	8.70	cy	-	2,001	-		-	-	230.00 /cy	2,001
n	0725	Struct SLAB ON GRADE concrete,ready mix,normal wt,4500 psi,includes local aggregate,sand,portland cement and water,delivered, includes all additives	87.00	CY	-	20,010	-		-	-	230.00 /CY	20,010
n	0255	Concrete finishing, floors, manual screed, bull float, machine float & steel trowel (walk-behind)_SOG	2,341.011	sf	1,717	-	-		126	-	0.787 /sf	1,843
n	0122	Control joint, concrete floor slab, sawcut in green concrete, 1" depth_SOG	117.051	lf	52	4	-		7	-	0.529 /lf	62

Central Kitsap Treatment Plant Solids Handling

Kitsap County

Detail Report - Direct Costs

	Item	Description	Takeoff Qty		Labor Amount	Material Amount	Subcontract Amount	Subcontract Name	Equipment Amount	Other Amount	Total Unit Cost	Total Amount
03 11 13.303		*12" Elevated Slab*										
n	0215	Control joint, clean out control joint of debris_SOG	117.051	lf	9	-	-			-	0.073 /lf	9
n	0367	Control joint, joint sealant, polyurethane, 1/4" x 1/4" (308 LF/Gal)_SOG	234.101	lf	382	37	-		-	-	1.790 /lf	419
n	0310	Concrete surface treatment, curing, sprayed membrane compound_SOG	23.41	csf	186	174	-		-	-	15.408 /csf	361
	1200	Vapor retarders, building paper, polyethylene vapor barrier, standard, 10 mil (.010" thick)	23.41	sq	297	191	-		-	-	20.82 /sq	487
n	1310	Fill, gravel fill, compacted, under floor slabs, alternate pricing method, 12" deep_SOG	100.00	ecy	1,091	3,200	-		124	-	44.143 /ecy	4,414
n	1136	Hauling, excavated borrow material, loose cubic yards, 20 mile round trip, 0.4 loads/hour, 16.5 c.y. dump trailer, highway haulers, excludes loading	100.00	lcy	821	-	-		1,241	-	20.626 /lcy	2,063
		03 11 13.303 12" Elevated Slab			*15,205*	*36,945*			*2,366*		*626.611/CY*	*54,515*
		87.00 CY										
		261.254 Labor hours										
		59.408 Equipment hours										
		03 11 13.300.10 Concrete Stairway Elevated Slab, 12" Thick x 2,341 SF			*15,205*	*36,945*	*0*		*2,366*	*0*	*626.611/CY*	*54,515*
		87.00 CY										
		261.254 Labor hours										
		59.408 Equipment hours										
03 11 13.504.20		*Stairway Concrete Slab, 24" Thick x 1,326 SF*										
03 11 13.504		*12" Slab on Grade*										
	3050	C.I.P. concrete forms, slab on grade, edge, wood, 7" to 12" high, 4 use, includes erecting, bracing, stripping and cleaning	291.312	sfca	1,195	355	-		-	-	5.322 /sfca	1,550
n	9015	C.I.P. concrete forms, bulkhead for slab on grade w/ keyway, up to 12", exp metal, includes erecting, bracing, stripping and cleaning	132.598	sfca	324	60	-		-	-	2.894 /sfca	384
n	2050	Reinforcing steel, unload and sort, add to base_SLAB ON GRADE	8.663	ton	311	-	-		181	-	56.816 /ton	492
	0600	Reinforcing steel, in place, slab on grade, #3 to #7, A615, grade 60, incl labor for accessories, excl material for accessories	8.663	ton	7,780	12,561	-		-	-	2,348.087 /ton	20,341
	2220	Reinforcing steel, crane cost for handling, 90 picks/day, up to 0.5 Ton/day	8.663	ton	890	-	-		516	-	162.331 /ton	1,406
	4650	Structural concrete, placing, slab on grade, pumped, over 6" thick, includes leveling (strike off) & consolidation, excludes material	9.90	cy	174	-	-		26	-	20.206 /cy	200
	4650	Structural concrete, placing, slab on grade, pumped, over 6" thick, includes leveling (strike off) & consolidation, excludes material	99.00	cy	1,736	-	-		264	-	20.206 /cy	2,000
n	0725	Struct SLAB ON GRADE concrete,ready mix,normal wt,4500 psi,includes local aggregate,sand,portland cement and water,delivered, includes all additives	9.90	cy	-	2,277	-		-	-	230.00 /cy	2,277

Central Kitsap Treatment Plant Solids Handling

Kitsap County

Detail Report - Direct Costs

	Item	Description	Takeoff Qty		Labor Amount	Material Amount	Subcontract Amount	Subcontract Name	Equipment Amount	Other Amount	Total Unit Cost	Total Amount
03 11 13.504		*12" Slab on Grade*										
n	0725	Struct SLAB ON GRADE concrete,ready mix,normal wt,4500 psi,includes local aggregate,sand,portland cement and water,delivered, includes all additives	99.00	CY	-	22,770	-		-	-	230.00 /CY	22,770
n	0255	Concrete finishing, floors, manual screed, bull float, machine float & steel trowel (walk-behind)_SOG	1,325.979	sf	972	-	-		71	-	0.787 /sf	1,044
n	0122	Control joint, concrete floor slab, sawcut in green concrete, 1" depth_SOG	66.299	lf	29	2	-		4	-	0.529 /lf	35
n	0215	Control joint, clean out control joint of debris_SOG	66.299	lf	5	-	-			-	0.073 /lf	5
n	0367	Control joint, joint sealant, polyurethane, 1/4" x 1/4" (308 LF/Gal)_SOG	132.598	lf	216	21	-		-	-	1.790 /lf	237
n	0310	Concrete surface treatment, curing, sprayed membrane compound_SOG	13.26	csf	106	99	-		-	-	15.408 /csf	204
	1200	Vapor retarders, building paper, polyethylene vapor barrier, standard, 10 mil (.010" thick)	13.26	sq	168	108	-		-	-	20.821 /sq	276
n	1310	Fill, gravel fill, compacted, under floor slabs, alternate pricing method, 12" deep_SOG	56.00	ecy	611	1,792	-		69	-	44.143 /ecy	2,472
n	1136	Hauling, excavated borrow material, loose cubic yards, 20 mile round trip, 0.4 loads/hour, 16.5 c.y. dump trailer, highway haulers, excludes loading	56.00	lcy	460	-	-		695	-	20.626 /lcy	1,155
		03 11 13.504 12" Slab on Grade			*14,977*	*40,045*			*1,827*		*574.243/CY*	*56,850*
		99.00 CY										
		252.867 Labor hours										
		41.874 Equipment hours										
		03 11 13.504.20 Stairway Concrete Slab, 24" Thick x 1,326 SF			*14,977*	*40,045*	*0*		*1,827*	*0*	*574.243/CY*	*56,850*
		99.00 CY										
		252.867 Labor hours										
		41.874 Equipment hours										
03 11 13.505.10		*Tank Concrete Slab, 30" Thick x 6,658 SF*										
03 11 13.505		*16" Slab on Grade*										
	3050	C.I.P. concrete forms, slab on grade, edge, wood, 7" to 12" high, 4 use, includes erecting, bracing, stripping and cleaning	815.97	sfca	3,347	995	-		-	-	5.322 /sfca	4,343
n	9015	C.I.P. concrete forms, bulkhead for slab on grade w/ keyway, up to 12", exp metal, includes erecting, bracing, stripping and cleaning	832.259	sfca	2,034	375	-		-	-	2.894 /sfca	2,408
n	2050	Reinforcing steel, unload and sort, add to base_SLAB ON GRADE	53.988	ton	1,941	-	-		1,126	-	56.816 /ton	3,067
	0600	Reinforcing steel, in place, slab on grade, #3 to #7, A615, grade 60, incl labor for accessories, excl material for accessories	53.988	ton	48,486	78,283	-		-	-	2,348.087 /ton	126,769
	2220	Reinforcing steel, crane cost for handling, 90 picks/day, up to 0.5 Ton/day	53.988	ton	5,546	-	-		3,218	-	162.331 /ton	8,764

Central Kitsap Treatment Plant Solids Handling

Kitsap County

Detail Report - Direct Costs

	Item	Description	Takeoff Qty		Labor Amount	Material Amount	Subcontract Amount	Subcontract Name	Equipment Amount	Other Amount	Total Unit Cost	Total Amount
03 11 13.505		*16" Slab on Grade*										
	4650	Structural concrete, placing, slab on grade, pumped, over 6" thick, includes leveling (strike off) & consolidation, excludes material	61.70	cy	1,082	-	-		165	-	20.206 /cy	1,247
	4650	Structural concrete, placing, slab on grade, pumped, over 6" thick, includes leveling (strike off) & consolidation, excludes material	617.00	cy	10,821	-	-		1,646	-	20.206 /cy	12,467
n	0725	Struct SLAB ON GRADE concrete,ready mix,normal wt,4500 psi,includes local aggregate,sand,portland cement and water,delivered, includes all additives	61.70	cy	-	14,191	-		-	-	230.00 /cy	14,191
n	0725	Struct SLAB ON GRADE concrete,ready mix,normal wt,4500 psi,includes local aggregate,sand,portland cement and water,delivered, includes all additives	617.00	CY	-	141,910	-		-	-	230.00 /CY	141,910
n	0255	Concrete finishing, floors, manual screed, bull float, machine float & steel trowel (walk-behind)_SOG	6,658.07	sf	4,882	-	-		359	-	0.787 /sf	5,241
n	0122	Control joint, concrete floor slab, sawcut in green concrete, 1" depth_SOG	332.904	lf	146	10	-		20	-	0.529 /lf	176
n	0215	Control joint, clean out control joint of debris_SOG	332.904	lf	24	-	-			-	0.073 /lf	24
n	0367	Control joint, joint sealant, polyurethane, 1/4" x 1/4" (308 LF/Gal)_SOG	665.807	lf	1,085	107	-		-	-	1.790 /lf	1,192
n	0310	Concrete surface treatment, curing, sprayed membrane compound_SOG	66.581	csf	530	496	-		-	-	15.408 /csf	1,026
	1200	Vapor retarders, building paper, polyethylene vapor barrier, standard, 10 mil (.010" thick)	66.581	sq	844	543	-		-	-	20.820 /sq	1,386
n	1310	Fill, gravel fill, compacted, under floor slabs, alternate pricing method, 12" deep_SOG	284.00	ecy	3,098	9,088	-		351	-	44.143 /ecy	12,537
n	1136	Hauling, excavated borrow material, loose cubic yards, 20 mile round trip, 0.4 loads/hour, 16.5 c.y. dump trailer, highway haulers, excludes loading	284.00	lcy	2,333	-	-		3,525	-	20.626 /lcy	5,858
		03 11 13.505 16" Slab on Grade			*86,199*	*245,997*			*10,409*		*555.276/CY*	*342,606*
		617.00 CY										
		1,444.667 Labor hours										
		231.540 Equipment hours										
		03 11 13.505.10 Tank Concrete Slab, 30" Thick x 6,658 SF			*86,199*	*245,997*	*0*		*10,409*	*0*	*555.276/CY*	*342,606*
		617.00 CY										
		1,444.667 Labor hours										
		231.540 Equipment hours										
03 11 13.800.10		*Exterior Concrete Stair Wall, 29' High x 156 LF*										
03 11 13.800		*06" CIP Wall*										
	0500	C.I.P. concrete forms, wall, wood bulkhead with 2 piece keyway, 1 use, includes erecting, bracing, stripping and cleaning	227.00	lf	2,359	772	-		-	-	13.792 /lf	3,131

AACE Classification Accuracy Range

Upper Range +50% **Lower Range -30%**

Central Kitsap Treatment Plant Solids Handling

Kitsap County

Detail Report - Direct Costs

	Item	Description	Takeoff Qty		Labor Amount	Material Amount	Subcontract Amount	Name	Equipment Amount	Other Amount	Total Unit Cost	Total Amount
03 11 13.800		*06" CIP Wall*										
	2550	C.I.P. concrete forms, wall, job built, plywood, over 8' to 16' high, 4 use, includes erecting, bracing, stripping and cleaning	9,048.00	sfca	63,084	8,958	-		-	-	7.962 /sfca	72,042
	5200	Chamfer strip, wood, 3/4" wide	453.00	lf	405	63	-		-	-	1.033 /lf	468
	1400	Tie cones, plastic, for coil tie system, for CIP wall forms, 1/2" bolt diameter x 1" setback length, includes material only	8.00	c	-	520	-		-	-	65.00 /c	520
n	3010	Waterstop, rubber, center bulb, 1/4" thick x 6" wide_WALLS	383.00	lf	1,238	2,873	-		-	-	10.733 /lf	4,111
	0100	Splice rebar, standard, self-aligning type, taper threaded, #4 bars, includes holding rebar in place while splicing	184.80	ea	1,584	2,365	-		-	-	21.373 /ea	3,950
n	2020	Reinforcing steel, unload and sort, add to base_WALLS	16.80	ton	604	-	-		350	-	56.816 /ton	955
n	2214	Reinforcing steel, crane cost for handling, average, add_WALLS	16.80	ton	657	-	-		381	-	61.758 /ton	1,038
	0700	Reinforcing steel, in place, walls, #3 to #7, A615, grade 60, incl labor for accessories, excl material for accessories	16.80	ton	11,567	24,360	-		-	-	2,138.533 /ton	35,927
	5100	Structural concrete, placing, walls, pumped, 12" thick, includes leveling (strike off) & consolidation, excludes material	168.00	cy	4,955	-	-		754	-	33.983 /cy	5,709
	5100	Structural concrete, placing, walls, pumped, 12" thick, includes leveling (strike off) & consolidation, excludes material	16.80	cy	496	-	-		75	-	33.983 /cy	571
n	0525	Struct WALLS concrete,ready mix,normal wt,4500 psi,includes local aggregate,sand,portland cement and water,delivered, includes all additives	16.80	cy	-	3,864	-		-	-	230.00 /cy	3,864
n	0525	Struct WALLS concrete,ready mix,normal wt,4500 psi,includes local aggregate,sand,portland cement and water,delivered, includes all additives	168.00	CY	-	38,640	-		-	-	230.00 /CY	38,640
n	0210	Control joint, clean out control joint of debris_WALLS	227.00	lf	17	-	-			-	0.073 /lf	17
n	0366	Control joint, joint sealant, polyurethane, 1/4" x 1/4" (308 LF/Gal)_WALLS	227.00	lf	370	36	-		-	-	1.790 /lf	406
	0020	Concrete finishing, walls, includes breaking ties and patching voids	9,048.00	sf	7,372	362	-		-	-	0.855 /sf	7,734
	0050	Concrete finishing, walls, burlap rub with grout, includes breaking ties and patching voids	4,524.00	sf	4,423	181	-		-	-	1.018 /sf	4,604
		03 11 13.800 06" CIP Wall			*99,131*	*82,994*			*1,561*		*1,093.368/CY*	*183,686*
		168.00 CY										
		1,727.631 Labor hours										
		43.125 Equipment hours										
		03 11 13.800.10 Exterior Concrete Stair Wall, 29' High x 156 LF			*99,131*	*82,994*	*0*		*1,561*	*0*	*1,093.368/CY*	*183,686*
		168.00 CY										
		1,727.631 Labor hours										

AACE Classification Accuracy Range

Upper Range +50% **Lower Range -30%**

Central Kitsap Treatment Plant Solids Handling

Kitsap County

Detail Report - Direct Costs

Item		Description	Takeoff Qty		Labor Amount	Material Amount	Subcontract Amount	Name	Equipment Amount	Other Amount	Total Unit Cost	Total Amount
		03 11 13.800.10 Exterior Concrete Stair Wall, 29' High x 156 LF			*99,131*	*82,994*	*0*		*1,561*	*0*	*1,093.368/CY*	*183,686*
		168.00 CY										
		1,727.631 Labor hours										
		43.125 Equipment hours										
03 11 13.803.10		*Concrete Tank Wall, Add Tanks Wall Height - Allowance*										
03 11 13.803		*10" CIP Wall*										
	0500	C.I.P. concrete forms, wall, wood bulkhead with 2 piece keyway, 1 use, includes erecting, bracing, stripping and cleaning	630.00	lf	6,547	2,142	-		-	-	13.792 /lf	8,689
	2550	C.I.P. concrete forms, wall, job built, plywood, over 8' to 16' high, 4 use, includes erecting, bracing, stripping and cleaning	25,200.00	sfca	175,698	24,948	-		-	-	7.962 /sfca	200,646
	5200	Chamfer strip, wood, 3/4" wide	1,260.00	lf	1,125	176	-		-	-	1.033 /lf	1,302
	1400	Tie cones, plastic, for coil tie system, for CIP wall forms, 1/2" bolt diameter x 1" setback length, includes material only	21.00	c	-	1,365	-		-	-	65.00 /c	1,365
n	3010	Waterstop, rubber, center bulb, 1/4" thick x 6" wide_WALLS	1,050.00	lf	3,395	7,875	-		-	-	10.733 /lf	11,270
	0100	Splice rebar, standard, self-aligning type, taper threaded, #4 bars, includes holding rebar in place while splicing	855.80	ea	7,336	10,954	-		-	-	21.373 /ea	18,291
n	2020	Reinforcing steel, unload and sort, add to base_WALLS	77.80	ton	2,797	-	-		1,623	-	56.816 /ton	4,420
n	2214	Reinforcing steel, crane cost for handling, average, add_WALLS	77.80	ton	3,041	-	-		1,764	-	61.758 /ton	4,805
	0700	Reinforcing steel, in place, walls, #3 to #7, A615, grade 60, incl labor for accessories, excl material for accessories	77.80	ton	53,568	112,810	-		-	-	2,138.533 /ton	166,378
	5100	Structural concrete, placing, walls, pumped, 12" thick, includes leveling (strike off) & consolidation, excludes material	77.80	cy	2,295	-	-		349	-	33.983 /cy	2,644
	5100	Structural concrete, placing, walls, pumped, 12" thick, includes leveling (strike off) & consolidation, excludes material	778.00	cy	22,947	-	-		3,492	-	33.983 /cy	26,439
n	0525	Struct WALLS concrete,ready mix,normal wt,4500 psi,includes local aggregate,sand,portland cement and water,delivered, includes all additives	77.80	cy	-	17,894	-		-	-	230.00 /cy	17,894
n	0525	Struct WALLS concrete,ready mix,normal wt,4500 psi,includes local aggregate,sand,portland cement and water,delivered, includes all additives	778.00	CY	-	178,940	-		-	-	230.00 /CY	178,940
n	0210	Control joint, clean out control joint of debris_WALLS	630.00	lf	46	-	-			-	0.073 /lf	46
n	0366	Control joint, joint sealant, polyurethane, 1/4" x 1/4" (308 LF/Gal)_WALLS	630.00	lf	1,027	101	-		-	-	1.790 /lf	1,127
	0020	Concrete finishing, walls, includes breaking ties and patching voids	25,200.00	sf	20,533	1,008	-		-	-	0.855 /sf	21,541

Central Kitsap Treatment Plant Solids Handling

Kitsap County

Detail Report - Direct Costs

Item		Description	Takeoff Qty		Labor Amount	Material Amount	Subcontract Amount	Subcontract Name	Equipment Amount	Other Amount	Total Unit Cost	Total Amount
03 11 13.803		*10" CIP Wall*										
	0050	Concrete finishing, walls, burlap rub with grout, includes breaking ties and patching voids	12,600.00	sf	12,320	504	-		-	-	1.018 /sf	12,824
		03 11 13.803 10" CIP Wall			*312,675*	*358,717*			*7,228*		*872.263/CY*	*678,621*
		778.00 CY										
		5,433.205 Labor hours										
		199.709 Equipment hours										
		03 11 13.803.10 Concrete Tank Wall, Add Tanks Wall Height - Allowance			*312,675*	*358,717*	*0*		*7,228*	*0*	*872.263/CY*	*678,621*
		778.00 CY										
		5,433.205 Labor hours										
		199.709 Equipment hours										
03 41 33.000.10		*Double Tee Roof, 243 SF*										
03 41 33.000		*Precast and Prestressed Concrete*										
	0300	Precast tees, double, floor, 30' span, prestressed	243.00	SF	234	3,463	-		122	-	15.717 /SF	3,819
		03 41 33.000 Precast and Prestressed Concrete			*234*	*3,463*			*122*		*15.717/SF*	*3,819*
		243.00 SF										
		3.645 Labor hours										
		0.405 Equipment hours										
		03 41 33.000.10 Double Tee Roof, 243 SF			*234*	*3,463*	*0*		*122*	*0*	*15.717/SF*	*3,819*
		243.00 SF										
		3.645 Labor hours										
		0.405 Equipment hours										
		DIVISION 03 CONCRETE			**576,353**	**873,759**	**0**		**27,776**	**0**	**737.101/CY**	**1,477,888**
		2,005.00 CY										
		9,940.695 Labor hours										
		670.497 Equipment hours										
DIVISION 04		**MASONRY**										
04 22 00.212.10		*CMU Block Split-Face, 12" Thick x 10' High x 65 LF*										
04 22 00.212		*Concrete Masonry Unit (12" CMU) - Exterior*										
	0090	Scaffolding, steel tubular, regular, labor only to erect & dismantle, building exterior, wall face, 6'-4" x 5' frames, 1 to 5 stories, excludes planks	7.00	csf	1,231	-	-		-	-	175.80 /csf	1,231
	0906	Scaffolding, steel tubular, regular, rent/month only for complete system for face of walls, 6' -4" x 5' frames, excludes planks	7.00	csf	-	581	-		-	-	83.00 /csf	581

Central Kitsap Treatment Plant Solids Handling

Kitsap County

Detail Report - Direct Costs

Item		Description	Takeoff Qty		Labor Amount	Material Amount	Subcontract Amount	Subcontract Name	Equipment Amount	Other Amount	Total Unit Cost	Total Amount
04 22 00.212		*Concrete Masonry Unit (12" CMU) - Exterior*										
	2850	Scaffolding, steel tubular, regular, accessory, plank, rent/mo, 2" x 10" x 16' long	15.00	ea	-	151	-		-	-	10.05 /ea	151
	0060	Grout, bond beams and lintels, 8" deep, 12" thick, 0.30 CF per LF, pumped, excludes blockwork	65.00	lf	105	103	-		13	-	3.402 /lf	221
	0350	Grout, concrete masonry unit (CMU) cores, 12" thick, 0.422 CF/SF, pumped, excludes blockwork	650.00	SF	1,710	1,456	-		204	-	5.184 /SF	3,370
	0020	Masonry reinforcing bars, #5 and #6 reinforcing steel bars, placed horizontally, ASTM A615	214.786	lb	124	157	-		-	-	1.305 /lb	280
	0060	Masonry reinforcing bars, #5 and #6 reinforcing steel bars, placed vertically, ASTM A615	805.448	lb	570	588	-		-	-	1.438 /lb	1,158
n	0150	Concrete block,bond beam,normal weight,2000 psi,12"x8"x16",includes mortar,excludes scaffolding,horizontal reinforcing,vertical reinforcing and grout	65.00	lf	319	397	-		-	-	11.001 /lf	715
	6250	Concrete block, decorative, split face or scored split face, 2000 psi, 12" x 8" x 16", excludes scaffolding, grout and reinforcing	65.00	sf	602	419	-		-	-	15.708 /sf	1,021
	6250	Concrete block, decorative, split face or scored split face, 2000 psi, 12" x 8" x 16", excludes scaffolding, grout and reinforcing	650.00	sf	6,018	4,193	-		-	-	15.708 /sf	10,210
	6550	Concrete block, decorative, split face or scored split face, 12" thick, for special deeper colors, add	65.00	sf	-	57	-		-	-	0.87 /sf	57
	6550	Concrete block, decorative, split face or scored split face, 12" thick, for special deeper colors, add	650.00	sf	-	566	-		-	-	0.87 /sf	566
		04 22 00.212 Concrete Masonry Unit (12" CMU) - Exterior			*10,678*	*8,666*			*216*		*30.092/SF*	*19,560*
		650.00 SF										
		200.790 Labor hours										
		8.625 Equipment hours										
		04 22 00.212.10 CMU Block Split-Face, 12" Thick x 10' High x 65 LF			*10,678*	*8,666*	*0*		*216*	*0*	*30.092/SF*	*19,560*
		650.00 SF										
		200.790 Labor hours										
		8.625 Equipment hours										
		DIVISION 04 MASONRY			**10,678**	**8,666**	**0**		**216**	**0**		**19,560**
		200.790 Labor hours										
		8.625 Equipment hours										

DIVISION 05 METALS

05 50 00.315.05 Stairs

05 50 00.315		*Metal Stairs - Aluminum*										
	0050	Stair, shop fabricated, steel, 4'-0" W, incl pipe railing, stringers, grating treads w/ safety nosing, per riser	84.00	RISR	5,867	43,260	-		438	-	590.053 /RISR	49,564

AACE Classification Accuracy Range

Upper Range +50% **Lower Range -30%**

Central Kitsap Treatment Plant Solids Handling

Kitsap County

Detail Report - Direct Costs

Item		Description	Takeoff Qty		Labor Amount	Material Amount	Subcontract Amount	Subcontract Name	Equipment Amount	Other Amount	Total Unit Cost	Total Amount
05 50 00.315		*Metal Stairs - Aluminum*										
	0132	Floor grating, aluminum, 1-1/2" x 3/16" bearing bars @ 1-3/16" O.C., cross bars @ 4" O.C., up to 300 S.F., field fabricated from panels	168.00	sf	503	7,728	-		38	-	49.217 /sf	8,268
		05 50 00.315 Metal Stairs - Aluminum			*6,369*	*50,988*			*475*		*688.486/RISR*	*57,833*
		84.00 RISR										
		97.280 Labor hours										
		24.320 Equipment hours										
		05 50 00.315.05 Stairs			*6,369*	*50,988*	*0*		*475*	*0*	*688.486/RISR*	*57,833*
		84.00 RISR										
		97.280 Labor hours										
		24.320 Equipment hours										
05 52 02.002.05		*Hand Railing, 241 LF*										
05 52 02.002		*Aluminum Railings - 3 Rail*										
	0210	Railing, pipe, aluminum, clear finish, 3 rails, 3'-6" high, posts @ 5' O.C., 1-1/2" dia, shop fabricated	241.00	LF	3,686	22,413	-		275	-	109.435 /LF	26,374
		05 52 02.002 Aluminum Railings - 3 Rail			*3,686*	*22,413*			*275*		*109.435/LF*	*26,374*
		241.00 LF										
		56.292 Labor hours										
		14.073 Equipment hours										
		05 52 02.002.05 Hand Railing, 241 LF			*3,686*	*22,413*	*0*		*275*	*0*	*109.435/LF*	*26,374*
		241.00 LF										
		56.292 Labor hours										
		14.073 Equipment hours										
		DIVISION 05 METALS			**10,055**	**73,401**	**0**		**751**	**0**		**84,207**
		153.572 Labor hours										
		38.393 Equipment hours										
DIVISION 07		**THERMAL, MOISTURE PROTECTION**										
07 51 00.000.10		*Built Up Roofing System PVC, 243 SF*										
07 51 00.000		*Built-Up Roofing System (BUR)*										
	0800	Aluminum coping, stock units, for 12" wall, excludes scaffolding	72.00	lf	1,012	225	-		-	-	17.180 /lf	1,237
	2780	2" x 8" miscellaneous wood blocking, to steel construction, per M.B.F.	0.072	mbf	217	104	-		-	-	4,465.00 /mbf	321
	2780	2" x 8" miscellaneous wood blocking, to steel construction, per M.B.F.	0.287	mbf	865	417	-		-	-	4,465.100 /mbf	1,281
	2700	Elastomeric sheet waterproofing, polyvinyl chloride sheets, plain, 30 mils thick	243.00	SF	486	76	-		-	-	2.310 /SF	561

Central Kitsap Treatment Plant Solids Handling

Kitsap County

Detail Report - Direct Costs

Item	Description	Takeoff Qty		Labor Amount	Material Amount	Subcontract Amount	Name	Equipment Amount	Other Amount	Total Unit Cost	Total Amount
07 51 00.000	*Built-Up Roofing System (BUR)*										
1725	Polyisocyanurate insulation, for roof decks, 2" thick, 2#/CF density, fastening excluded	243.00	sf	95	245	-		-	-	1.400 /sf	340
1745	Polyisocyanurate insulation, for roof decks, 3" thick, 2#/CF density, fastening excluded	243.00	sf	104	367	-		-	-	1.940 /sf	471
0825	Asphalt shingles, #30 felt underlayment	2.00	sq	19	23	-		-	-	21.38 /sq	43
0100	Sheet metal flashing, aluminum, flexible, mill finish, .032" thick, including up to 4 bends	125.00	sf	482	715	-		-	-	9.580 /sf	1,197
	07 51 00.000 Built-Up Roofing System (BUR)			*3,281*	*2,172*					*22.440/SF*	*5,453*
	243.00 SF										
	60.808 Labor hours										
	07 51 00.000.10 Built Up Roofing System PVC, 243 SF			*3,281*	*2,172*	*0*		*0*	*0*	*22.440/SF*	*5,453*
	243.00 SF										
	60.808 Labor hours										
	DIVISION 07 THERMAL, MOISTURE PROTECTION			**3,281**	**2,172**	**0**		**0**	**0**	**22.440/SF**	**5,453**
	243.00 SF										
	60.808 Labor hours										

DIVISION 08 OPENINGS

08 11 00.060.35 *Exterior Door, 6' x 7'*

Item	Description	Takeoff Qty		Labor Amount	Material Amount	Subcontract Amount	Name	Equipment Amount	Other Amount	Total Unit Cost	Total Amount
08 11 00.060	*Metal Doors & Frames (6070)*										
3620	Frames, steel, knock down, hollow metal, 14 gauge, up to 5-3/4" D, 7'-0" H, 6'-0" W, double	3.00	EA	234	705	-		-	-	313.133 /EA	939
5100	Doors, aluminum, commercial entrance, flush panel doors, pair of, 3'-0" x 7'-0", incl. hinges, push/pull, deadlock, cylinder, threshold, excl. glazing	3.00	pr	1,549	4,875	-		-	-	2,141.40 /pr	6,424
3000	Door hardware, panic device, narrow stile, mortise bar, exit only	6.00	ea	703	3,600	-		-	-	717.20 /ea	4,303
0011	Thresholds, aluminum, 3' long door saddles	18.00	lf	176	217	-		-	-	21.817 /lf	393
1430	Door hardware, hinges, full mortise, high frequency, brass base, US10, 4-1/2" x 4-1/2"	9.00	pr	-	545	-		-	-	60.50 /pr	545
1200	Paints & coatings, exterior, door & frame, one side, flush, 1 coat, 3' x 7'	6.00	ea	140	14	-		-	-	25.655 /ea	154
	08 11 00.060 Metal Doors & Frames (6070)			*2,803*	*9,955*					*4,252.643/EA*	*12,758*
	3.00 EA										
	45.824 Labor hours										

Central Kitsap Treatment Plant Solids Handling

Kitsap County

Detail Report - Direct Costs

Item	Description	Takeoff Qty		Labor Amount	Material Amount	Subcontract Amount	Subcontract Name	Equipment Amount	Other Amount	Total Unit Cost	Total Amount
	08 11 00.060.35 Exterior Door, 6' x 7'			*2,803*	*9,955*	*0*		*0*	*0*	*4,252.643/EA*	*12,758*
	3.00 EA										
	45.824 Labor hours										
	DIVISION 08 OPENINGS			**2,803**	**9,955**	**0**		**0**	**0**	**4,252.643/EA**	**12,758**
	3.00 EA										
	45.824 Labor hours										
DIVISION 13	**SPECIAL CONSTRUCTION**										
13.61.04.010	*Gas holding membrane cover*										
13 61 04.000	*Digester Membrane Cover*										
9103	Specialty biogas membrane cover - digester gas containment	2.00	ea		1,208,000				-	604,000.00 /ea	1,208,000
9103	Install digester membrane cover	2.00	ea	45,104		30,000		35,000	-	55,052.00 /ea	110,104
	13 61 04.000 Digester Membrane Cover			*45,104*	*1,208,000*	*30,000*		*35,000*			*1,318,104*
	800.00 Labor hours										
	200.00 Equipment hours										
	13.61.04.010 Gas holding membrane cover			*45,104*	*1,208,000*	*30,000*		*35,000*	*0*		*1,318,104*
	800.00 Labor hours										
	200.00 Equipment hours										
13.61.04.015	*Cover Blowers*										
13 61 04.000	*Digester Membrane Cover*										
0140	Air and gas handling equipment, blowers and system components, rotary lobe blowers	2.00	EA	2,991	15,000	-		1,540	-	9,765.275 /EA	19,531
	13 61 04.000 Digester Membrane Cover			*2,991*	*15,000*			*1,540*			*19,531*
	44.00 Labor hours										
	44.00 Equipment hours										
	13.61.04.015 Cover Blowers			*2,991*	*15,000*	*0*		*1,540*	*0*	*9,765.275/EA*	*19,531*
	2.00 EA										
	44.00 Labor hours										
	44.00 Equipment hours										
	DIVISION 13 SPECIAL CONSTRUCTION			**48,095**	**1,223,000**	**30,000**		**36,540**	**0**		**1,337,635**
	844.00 Labor hours										
	244.00 Equipment hours										
DIVISION 31	**EARTHWORK**										

AACE Classification Accuracy Range

Upper Range +50% **Lower Range -30%**

Central Kitsap Treatment Plant Solids Handling

Kitsap County

Detail Report - Direct Costs

	Item	Description	Takeoff Qty		Labor Amount	Material Amount	Subcontract Amount	Subcontract Name	Equipment Amount	Other Amount	Total Unit Cost	Total Amount
31.23.10.P005		*Excavation, Backfill, and Haul Off-Site*										
31 23 10.000		*Excavation, Backfill, and Haul Off-Site*										
n	6260	Strt excvt for minor strtr,bank measr,for sprd and mat ftngs,elvtr pits,and small bldng fndtn,sandy clay loam,2 cy bucket,machin excvtn,hydrlc backhoe	8,950.00	CY	37,640	-	-		41,934	-	8.891 /CY	79,574
	4010	Backfill, structural, sandy clay & loam, 200 H.P. dozer, 50' haul, from existing stockpile, excludes compaction	4,110.00	CY	1,170	-	-		2,701	-	0.942 /CY	3,871
	4060	Borrow, common earth, 1-1/2 C.Y. bucket, loading and/or spreading, front end loader, wheel-mounted	4,110.00	CY	2,938	32,880	-		1,909	-	9.179 /CY	37,727
n	0560	Hauling,excavated borrow material,loose cubic yards,20 mile round trip,0.4 load/hr,base wide rate,12 cy truck,highway haulers,excludes loading	6,025.00	CY	68,531	-	-		94,158	-	27.002 /CY	162,689
	0400	Compaction, structural, select fill, 8" lifts, sheepsfoot or wobbly wheel roller	4,110.00	CY	1,900	-	-		3,929	-	1.418 /CY	5,829
		31 23 10.000 Excavation, Backfill, and Haul Off-Site			*112,179*	*32,880*			*144,631*		*10.609/CY*	*289,690*
		27,305.00 CY										
		2,002.851 Labor hours										
		1,636.709 Equipment hours										
		31.23.10.P005 Excavation, Backfill, and Haul Off-Site			*112,179*	*32,880*	*0*		*144,631*	*0*	*10.609/CY*	*289,690*
		27,305.00 CY										
		2,002.851 Labor hours										
		1,636.709 Equipment hours										
31.23.19.P025		*Well Point Detwatering - 12 Months*										
31 23 19.020		*Dewatering - Wellpoint*										
n	1300	Wellpoints,complete installation,2"wellpoints,5'oc, 500'long header,8"diameter,includes one month operation,equipment rental,fuel and removal system	600.00	hdr	107,831	32,400	-		-	-	233.718 /hdr	140,231
	1400	Wellpoints, each additional month, 2" wellpoints, 5' O.C., 500' long header, 8" diameter, includes operation, equipment rental, and fuel	6,600.00	hdr	602,996	254,100	-		-	-	129.863 /hdr	857,096
		31 23 19.020 Dewatering - Wellpoint			*710,826*	*286,500*					*83,110.529/MO*	*997,326*
		12.00 MO										
		11,906.639 Labor hours										
		31.23.19.P025 Well Point Detwatering - 12 Months			*710,826*	*286,500*	*0*		*0*	*0*	*83,110.529/MO*	*997,326*
		12.00 MO										
		11,906.639 Labor hours										

AACE Classification Accuracy Range

Upper Range +50% **Lower Range -30%**

Central Kitsap Treatment Plant Solids Handling

Kitsap County

Detail Report - Direct Costs

Item		Description	Takeoff Qty		Labor Amount	Material Amount	Subcontract Amount	Name	Equipment Amount	Other Amount	Total Unit Cost	Total Amount
		DIVISION 31 EARTHWORK			**823,005**	**319,380**	**0**		**144,631**	**0**	**47.135/CY**	**1,287,017**
		27,305.00 CY										
		13,909.490 Labor hours										
		1,636.709 Equipment hours										
DIVISION 46		**WATER AND WASTEWATER EQUIPMENT**										
43.23.57.010		*Septage Equalization Pumps*										
43 23 57.000		*Progressive Cavity Pumps*										
n	0010	Progressive cavity transfer pump	2.00	EA	11,608	70,000	-		4,160		42,884.00 /EA	85,768
n	0010	Feed flow control valve system	1.00	LS	3,482	80,000	-		880		84,362.40 /LS	84,362
		43 23 57.000 Progressive Cavity Pumps			*15,090*	*150,000*			*5,040*		*85,065.20 /EA*	*170,130*
		2.00 EA										
		208.00 Labor hours										
		48.00 Equipment hours										
		43.23.57.010 Septage Equalization Pumps			*15,090*	*150,000*	*0*		*5,040*	*0*	*85,065.20 /EA*	*170,130*
		2.00 EA										
		208.00 Labor hours										
		48.00 Equipment hours										
43.23.57.037		*Centrifuge feed and transfer pumps*										
43 23 57.000		*Progressive Cavity Pumps*										
n	0010	Progressive cavity feed pumps pump 40 hp	4.00	EA	23,216	200,000	-		8,320		57,884.00 /EA	231,536
		43 23 57.000 Progressive Cavity Pumps			*23,216*	*200,000*			*8,320*		*57,884.00 /EA*	*231,536*
		4.00 EA										
		320.00 Labor hours										
		64.00 Equipment hours										
		43.23.57.037 Centrifuge feed and transfer pumps			*23,216*	*200,000*	*0*		*8,320*	*0*	*57,884.00 /EA*	*231,536*
		4.00 EA										
		320.00 Labor hours										
		64.00 Equipment hours										
43.23.58.010		*Sludge Recirc Pumps*										
43 23 58.000		*Rotary Lobe Pumps*										
	1000	Rotary Lobe pumps	2.00	ea	3,527	50,706	-		804	-	27,518.89 /ea	55,038

Central Kitsap Treatment Plant Solids Handling

Kitsap County

Detail Report - Direct Costs

Item	Description	Takeoff Qty	Labor Amount	Material Amount	Subcontract Amount	Subcontract Name	Equipment Amount	Other Amount	Total Unit Cost	Total Amount
	43 23 58.000 Rotary Lobe Pumps		*3,527*	*50,706*			*804*			*55,038*
	64.00 Labor hours									
	16.00 Equipment hours									
	43.23.58.010 Sludge Recirc Pumps		*3,527*	*50,706*	*0*		*804*	*0*		*55,038*
	64.00 Labor hours									
	16.00 Equipment hours									
46.73.33.010	*Rotamix Mix System*									
46 73 33.010	*Digester Mixing System*									
0008	Mixing Assembly w/ Chopper pumps	3.00 ea	27,062	276,000	-		15,272		106,111.38 /ea	318,334
0008	Rotamix Spare parts	2.00 ea		36,000	-				18,000.00 /ea	36,000
0008	Rotating sub-assembly	1.00 ea		17,000	-				17,000.00 /ea	17,000
	46 73 33.010 Digester Mixing System		*27,062*	*329,000*			*15,272*			*371,334*
	480.00 Labor hours									
	180.00 Equipment hours									
	46.73.33.010 Rotamix Mix System		*27,062*	*329,000*	*0*		*15,272*	*0*		*371,334*
	480.00 Labor hours									
	180.00 Equipment hours									
46.73.41.010	*Heat Exchanger - Recirc Digested Sludge*									
46 73 41.020	*Digester - Heat Exchanger*									
0100	Digester, Heat Exchangers	2.00 EA	9,360	70,000			5,760		42,560.00 /EA	85,120
	46 73 41.020 Digester - Heat Exchanger		*9,360*	*70,000*			*5,760*			*85,120*
	144.00 Labor hours									
	144.00 Equipment hours									
	46.73.41.010 Heat Exchanger - Recirc Digested Sludge		*9,360*	*70,000*	*0*		*5,760*	*0*	*42,560.00 /EA*	*85,120*
	2.00 EA									
	144.00 Labor hours									
	144.00 Equipment hours									
	DIVISION 46 WATER AND WASTEWATER EQUIPMENT		**78,256**	**799,706**	**0**		**35,196**	**0**	**114,144.79 /EA**	**913,158**
	8.00 EA									
	1,216.00 Labor hours									
	452.00 Equipment hours									
	600 DIGESTERS 3&4 - NEW W/ CONTROL BUILDING		***1,552,526***	***3,310,039***	***30,000***		***245,110***	***0***	***3,669,767.57 /MGD***	***5,137,675***
	1.40 MGD									
	26,371.179 Labor hours									

AACE Classification Accuracy Range

Upper Range +50% **Lower Range -30%**

Central Kitsap Treatment Plant Solids Handling

Kitsap County

Detail Report - Direct Costs

Item	Description	Takeoff Qty	Labor Amount	Material Amount	Subcontract Amount	Subcontract Name	Equipment Amount	Other Amount	Total Unit Cost	Total Amount
	600 DIGESTERS 3&4 - NEW W/ CONTROL BUILDING		***1,552,526***	***3,310,039***	***30,000***		***245,110***	***0***	***3,669,767.57 /MGD***	***5,137,675***
	1.40 MGD									
	26,371.179 Labor hours									
	3,050.224 Equipment hours									

630 DIGESTER CONTROL BUILDING

DIVISION 03 **CONCRETE**

03 11 13.155.05 *Concrete Footing, 12" High x 2' Wide x 226 LF*

03 11 13.155		*Cont. Footing 62" x 24"*									
n	3001	C.I.P. concrete forms, SIDEWALK, edge, wood, to 6" high, 4 use, includes erecting, bracing, stripping and cleaning	456.00	lf	1,356	132	-	-	-	3.264 /lf	1,488
n	0301	Welded wire fabric, sheets, 6 x 6 - W2.9 x W2.9 (6 x 6) 42 lb. per C.S.F., A185_SIDEWALK	5.00	csf	178	120	-	-	-	59.614 /csf	298
n	4301	Structural concrete, placing, sidewalk, direct chute, up to 6" thick, includes vibrating, excludes material	1.70	cy	37	-	-	1	-	21.99 /cy	37
n	4301	Structural concrete, placing, sidewalk, direct chute, up to 6" thick, includes vibrating, excludes material	17.00	cy	365	-	-	9	-	21.992 /cy	374
n	1120	Struct SIDEWALK concrete,ready mix,normal wt,4000 psi,includes local aggregate,sand,portland cement and water,delivered, includes all additives	1.70	cy	-	366	-	-	-	215.00 /cy	366
n	1120	Struct SIDEWALK concrete,ready mix,normal wt,4000 psi,includes local aggregate,sand,portland cement and water,delivered, includes all additives	17.00	CY	-	3,655	-	-	-	215.00 /CY	3,655
n	0152	Concrete finishing, floors, manual screed, bull float, manual float, broom finish_SIDEWALKS	452.00	sf	307	-	-	-	-	0.680 /sf	307
n	0123	Control joint, concrete floor slab, sawcut in green concrete, 1" depth_SIDEWALKS	113.00	lf	50	3	-	7	-	0.529 /lf	60
n	0216	Control joint, clean out control joint of debris_SIDEWALKS	113.00	lf	8	-	-		-	0.073 /lf	8
n	0312	Concrete surface treatment, curing, sprayed membrane compound_SIDEWALKS	5.00	csf	40	37	-	-	-	15.408 /csf	77
n	1111	Fill, gravel fill, compacted, under floor slabs, alternate pricing method, 6" deep_SIDEWALK	10.00	ecy	150	320	-	17	-	48.698 /ecy	487
	03 11 13.155 Cont. Footing 62" x 24"				*2,491*	*4,633*		*33*		*421.03 /CY*	*7,158*
	17.00 CY										
	45.996 Labor hours										
	3.672 Equipment hours										

AACE Classification Accuracy Range

Upper Range +50% **Lower Range -30%**

Central Kitsap Treatment Plant Solids Handling

Kitsap County

Detail Report - Direct Costs

Item		Description	Takeoff Qty		Labor Amount	Material Amount	Subcontract Amount	Name	Equipment Amount	Other Amount	Total Unit Cost	Total Amount
		03 11 13.155.05 Concrete Footing, 12" High x 2' Wide x 226 LF			*2,491*	*4,633*	*0*		*33*	*0*	*421.03 /CY*	*7,158*
		17.00 CY										
		45.996 Labor hours										
		3.672 Equipment hours										
03 11 13.303.20		*Roof Slab, 12" Thick x 3,190 SF*										
03 11 13.303		*12" Elevated Slab*										
	3050	C.I.P. concrete forms, slab on grade, edge, wood, 7" to 12" high, 4 use, includes erecting, bracing, stripping and cleaning	225.92	sfca	927	276	-		-	-	5.322 /sfca	1,202
n	9015	C.I.P. concrete forms, bulkhead for slab on grade w/ keyway, up to 12", exp metal, includes erecting, bracing, stripping and cleaning	159.50	sfca	390	72	-		-	-	2.894 /sfca	462
n	2050	Reinforcing steel, unload and sort, add to base_SLAB ON GRADE	10.413	ton	374	-	-		217	-	56.816 /ton	592
	0600	Reinforcing steel, in place, slab on grade, #3 to #7, A615, grade 60, incl labor for accessories, excl material for accessories	10.413	ton	9,352	15,099	-		-	-	2,348.087 /ton	24,451
	2220	Reinforcing steel, crane cost for handling, 90 picks/day, up to 0.5 Ton/day	10.413	ton	1,070	-	-		621	-	162.331 /ton	1,690
	4650	Structural concrete, placing, slab on grade, pumped, over 6" thick, includes leveling (strike off) & consolidation, excludes material	11.90	cy	209	-	-		32	-	20.206 /cy	240
	4650	Structural concrete, placing, slab on grade, pumped, over 6" thick, includes leveling (strike off) & consolidation, excludes material	119.00	cy	2,087	-	-		318	-	20.206 /cy	2,405
n	0725	Struct SLAB ON GRADE concrete,ready mix,normal wt,4500 psi,includes local aggregate,sand,portland cement and water,delivered, includes all additives	11.90	cy	-	2,737	-		-	-	230.00 /cy	2,737
n	0725	Struct SLAB ON GRADE concrete,ready mix,normal wt,4500 psi,includes local aggregate,sand,portland cement and water,delivered, includes all additives	119.00	CY	-	27,370	-		-	-	230.00 /CY	27,370
n	0255	Concrete finishing, floors, manual screed, bull float, machine float & steel trowel (walk-behind)_SOG	3,189.99	sf	2,339	-	-		172	-	0.787 /sf	2,511
n	0122	Control joint, concrete floor slab, sawcut in green concrete, 1" depth_SOG	159.50	lf	70	5	-		9	-	0.529 /lf	84
n	0215	Control joint, clean out control joint of debris_SOG	159.50	lf	12	-	-			-	0.073 /lf	12
n	0367	Control joint, joint sealant, polyurethane, 1/4" x 1/4" (308 LF/Gal)_SOG	318.999	lf	520	51	-		-	-	1.790 /lf	571
n	0310	Concrete surface treatment, curing, sprayed membrane compound_SOG	31.90	csf	254	238	-		-	-	15.408 /csf	492
	1200	Vapor retarders, building paper, polyethylene vapor barrier, standard, 10 mil (.010" thick)	31.90	sq	404	260	-		-	-	20.820 /sq	664
n	1310	Fill, gravel fill, compacted, under floor slabs, alternate pricing method, 12" deep_SOG	136.00	ecy	1,483	4,352	-		168	-	44.143 /ecy	6,004

AACE Classification Accuracy Range

Upper Range +50% **Lower Range -30%**

Central Kitsap Treatment Plant Solids Handling

Kitsap County

Detail Report - Direct Costs

	Item	Description	Takeoff Qty		Labor Amount	Material Amount	Subcontract Amount	Name	Equipment Amount	Other Amount	Total Unit Cost	Total Amount
03 11 13.303		*12" Elevated Slab*										
n	1136	Hauling, excavated borrow material, loose cubic yards, 20 mile round trip, 0.4 loads/hour, 16.5 c.y. dump trailer, highway haulers, excludes loading	136.00	lcy	1,117	-	-		1,688	-	20.626 /lcy	2,805
		03 11 13.303 12" Elevated Slab			*20,608*	*50,459*			*3,225*		*624.294/CY*	*74,291*
		119.00 CY										
		353.920 Labor hours										
		80.940 Equipment hours										
		03 11 13.303.20 Roof Slab, 12" Thick x 3,190 SF			*20,608*	*50,459*	*0*		*3,225*	*0*	*624.294/CY*	*74,291*
		119.00 CY										
		353.920 Labor hours										
		80.940 Equipment hours										
03 11 13.504.25		*Concrete Slab, 12" Thick x 3,190 SF*										
03 11 13.504		*12" Slab on Grade*										
	3050	C.I.P. concrete forms, slab on grade, edge, wood, 7" to 12" high, 4 use, includes erecting, bracing, stripping and cleaning	225.92	sfca	927	276	-		-	-	5.322 /sfca	1,202
n	9015	C.I.P. concrete forms, bulkhead for slab on grade w/ keyway, up to 12", exp metal, includes erecting, bracing, stripping and cleaning	159.50	sfca	390	72	-		-	-	2.894 /sfca	462
n	2050	Reinforcing steel, unload and sort, add to base_SLAB ON GRADE	10.413	ton	374	-	-		217	-	56.816 /ton	592
	0600	Reinforcing steel, in place, slab on grade, #3 to #7, A615, grade 60, incl labor for accessories, excl material for accessories	10.413	ton	9,352	15,099	-		-	-	2,348.087 /ton	24,451
	2220	Reinforcing steel, crane cost for handling, 90 picks/day, up to 0.5 Ton/day	10.413	ton	1,070	-	-		621	-	162.331 /ton	1,690
	4650	Structural concrete, placing, slab on grade, pumped, over 6" thick, includes leveling (strike off) & consolidation, excludes material	11.90	cy	209	-	-		32	-	20.206 /cy	240
	4650	Structural concrete, placing, slab on grade, pumped, over 6" thick, includes leveling (strike off) & consolidation, excludes material	119.00	cy	2,087	-	-		318	-	20.206 /cy	2,405
n	0725	Struct SLAB ON GRADE concrete,ready mix,normal wt,4500 psi,includes local aggregate,sand,portland cement and water,delivered, includes all additives	11.90	cy	-	2,737	-		-	-	230.00 /cy	2,737
n	0725	Struct SLAB ON GRADE concrete,ready mix,normal wt,4500 psi,includes local aggregate,sand,portland cement and water,delivered, includes all additives	119.00	CY	-	27,370	-		-	-	230.00 /CY	27,370
n	0255	Concrete finishing, floors, manual screed, bull float, machine float & steel trowel (walk-behind)_SOG	3,189.99	sf	2,339	-	-		172	-	0.787 /sf	2,511
n	0122	Control joint, concrete floor slab, sawcut in green concrete, 1" depth_SOG	159.50	lf	70	5	-		9	-	0.529 /lf	84

AACE Classification Accuracy Range

Upper Range +50% **Lower Range -30%**

Central Kitsap Treatment Plant Solids Handling

Kitsap County

Detail Report - Direct Costs

	Item	Description	Takeoff Qty		Labor Amount	Material Amount	Subcontract Amount	Subcontract Name	Equipment Amount	Other Amount	Total Unit Cost	Total Amount
03 11 13.504		*12" Slab on Grade*										
n	0215	Control joint, clean out control joint of debris_SOG	159.50	lf	12	-	-			-	0.073 /lf	12
n	0367	Control joint, joint sealant, polyurethane, 1/4" x 1/4" (308 LF/Gal)_SOG	318.999	lf	520	51	-		-	-	1.790 /lf	571
n	0310	Concrete surface treatment, curing, sprayed membrane compound_SOG	31.90	csf	254	238	-		-	-	15.408 /csf	492
	1200	Vapor retarders, building paper, polyethylene vapor barrier, standard, 10 mil (.010" thick)	31.90	sq	404	260	-		-	-	20.820 /sq	664
n	1310	Fill, gravel fill, compacted, under floor slabs, alternate pricing method, 12" deep_SOG	136.00	ecy	1,483	4,352	-		168	-	44.143 /ecy	6,004
n	1136	Hauling, excavated borrow material, loose cubic yards, 20 mile round trip, 0.4 loads/hour, 16.5 c.y. dump trailer, highway haulers, excludes loading	136.00	lcy	1,117	-	-		1,688	-	20.626 /lcy	2,805
		03 11 13.504 12" Slab on Grade			*20,608*	*50,459*			*3,225*		*624.294/CY*	*74,291*
		119.00 CY										
		353.920 Labor hours										
		80.940 Equipment hours										
		03 11 13.504.25 Concrete Slab, 12" Thick x 3,190 SF			*20,608*	*50,459*	*0*		*3,225*	*0*	*624.294/CY*	*74,291*
		119.00 CY										
		353.920 Labor hours										
		80.940 Equipment hours										
03 11 13.804.40		*Concrete Wall, 16' High x 267 LF*										
03 11 13.804		*12" CIP Wall*										
	0500	C.I.P. concrete forms, wall, wood bulkhead with 2 piece keyway, 1 use, includes erecting, bracing, stripping and cleaning	214.00	lf	2,224	728	-		-	-	13.792 /lf	2,952
	2550	C.I.P. concrete forms, wall, job built, plywood, over 8' to 16' high, 4 use, includes erecting, bracing, stripping and cleaning	8,544.00	sfca	59,570	8,459	-		-	-	7.962 /sfca	68,029
	5200	Chamfer strip, wood, 3/4" wide	428.00	lf	382	60	-		-	-	1.033 /lf	442
	1400	Tie cones, plastic, for coil tie system, for CIP wall forms, 1/2" bolt diameter x 1" setback length, includes material only	8.00	c	-	520	-		-	-	65.00 /c	520
n	3010	Waterstop, rubber, center bulb, 1/4" thick x 6" wide_WALLS	481.00	lf	1,555	3,608	-		-	-	10.733 /lf	5,163
	0100	Splice rebar, standard, self-aligning type, taper threaded, #4 bars, includes holding rebar in place while splicing	174.90	ea	1,499	2,239	-		-	-	21.373 /ea	3,738
n	2020	Reinforcing steel, unload and sort, add to base_WALLS	15.90	ton	572	-	-		332	-	56.816 /ton	903
n	2214	Reinforcing steel, crane cost for handling, average, add_WALLS	15.90	ton	621	-	-		361	-	61.758 /ton	982
	0700	Reinforcing steel, in place, walls, #3 to #7, A615, grade 60, incl labor for accessories, excl material for accessories	15.90	ton	10,948	23,055	-		-	-	2,138.533 /ton	34,003

Central Kitsap Treatment Plant Solids Handling

Kitsap County

Detail Report - Direct Costs

	Item	Description	Takeoff Qty		Labor Amount	Material Amount	Subcontract Amount	Subcontract Name	Equipment Amount	Other Amount	Total Unit Cost	Total Amount
03 11 13.804		*12" CIP Wall*										
	5100	Structural concrete, placing, walls, pumped, 12" thick, includes leveling (strike off) & consolidation, excludes material	15.90	cy	469	-	-		71	-	33.983 /cy	540
	5100	Structural concrete, placing, walls, pumped, 12" thick, includes leveling (strike off) & consolidation, excludes material	159.00	cy	4,690	-	-		714	-	33.983 /cy	5,403
n	0525	Struct WALLS concrete,ready mix,normal wt,4500 psi,includes local aggregate,sand,portland cement and water,delivered, includes all additives	15.90	cy	-	3,657	-		-	-	230.00 /cy	3,657
n	0525	Struct WALLS concrete,ready mix,normal wt,4500 psi,includes local aggregate,sand,portland cement and water,delivered, includes all additives	159.00	CY	-	36,570	-		-	-	230.00 /CY	36,570
n	0210	Control joint, clean out control joint of debris_WALLS	214.00	lf	16	-	-			-	0.073 /lf	16
n	0366	Control joint, joint sealant, polyurethane, 1/4" x 1/4" (308 LF/Gal)_WALLS	214.00	lf	349	34	-		-	-	1.790 /lf	383
	0020	Concrete finishing, walls, includes breaking ties and patching voids	8,544.00	sf	6,962	342	-		-	-	0.855 /sf	7,304
	0050	Concrete finishing, walls, burlap rub with grout, includes breaking ties and patching voids	4,272.00	sf	4,177	171	-		-	-	1.018 /sf	4,348
		03 11 13.804 12" CIP Wall			*94,033*	*79,441*			*1,477*		*1,100.325/CY*	*174,952*
		159.00 CY										
		1,638.628 Labor hours										
		40.815 Equipment hours										
		03 11 13.804.40 Concrete Wall, 16' High x 267 LF			*94,033*	*79,441*	*0*		*1,477*	*0*	*1,100.325/CY*	*174,952*
		159.00 CY										
		1,638.628 Labor hours										
		40.815 Equipment hours										
03 11 13.804.45		*Grade Wall, 12" High x 12" Wide x 534 LF*										
03 11 13.804		*12" CIP Wall*										
	0500	C.I.P. concrete forms, wall, wood bulkhead with 2 piece keyway, 1 use, includes erecting, bracing, stripping and cleaning	27.00	lf	281	92	-		-	-	13.793 /lf	372
	2550	C.I.P. concrete forms, wall, job built, plywood, over 8' to 16' high, 4 use, includes erecting, bracing, stripping and cleaning	1,068.00	sfca	7,446	1,057	-		-	-	7.962 /sfca	8,504
	5200	Chamfer strip, wood, 3/4" wide	54.00	lf	48	8	-		-	-	1.033 /lf	56
	1400	Tie cones, plastic, for coil tie system, for CIP wall forms, 1/2" bolt diameter x 1" setback length, includes material only	1.00	c	-	65	-		-	-	65.00 /c	65
n	3010	Waterstop, rubber, center bulb, 1/4" thick x 6" wide_WALLS	561.00	lf	1,814	4,208	-		-	-	10.733 /lf	6,021
	0100	Splice rebar, standard, self-aligning type, taper threaded, #4 bars, includes holding rebar in place while splicing	22.00	ea	189	282	-		-	-	21.373 /ea	470

Central Kitsap Treatment Plant Solids Handling

Kitsap County

Detail Report - Direct Costs

Item		Description	Takeoff Qty		Labor Amount	Material Amount	Subcontract Amount	Subcontract Name	Equipment Amount	Other Amount	Total Unit Cost	Total Amount
03 11 13.804		*12" CIP Wall*										
n	2020	Reinforcing steel, unload and sort, add to base_WALLS	2.00	ton	72	-	-		42	-	56.815 /ton	114
n	2214	Reinforcing steel, crane cost for handling, average, add_WALLS	2.00	ton	78	-	-		45	-	61.76 /ton	124
	0700	Reinforcing steel, in place, walls, #3 to #7, A615, grade 60, incl labor for accessories, excl material for accessories	2.00	ton	1,377	2,900	-		-	-	2,138.535 /ton	4,277
	5100	Structural concrete, placing, walls, pumped, 12" thick, includes leveling (strike off) & consolidation, excludes material	2.00	cy	59	-	-		9	-	33.985 /cy	68
	5100	Structural concrete, placing, walls, pumped, 12" thick, includes leveling (strike off) & consolidation, excludes material	20.00	cy	590	-	-		90	-	33.983 /cy	680
n	0525	Struct WALLS concrete,ready mix,normal wt,4500 psi,includes local aggregate,sand,portland cement and water,delivered, includes all additives	2.00	cy	-	460	-		-	-	230.00 /cy	460
n	0525	Struct WALLS concrete,ready mix,normal wt,4500 psi,includes local aggregate,sand,portland cement and water,delivered, includes all additives	20.00	CY	-	4,600	-		-	-	230.00 /CY	4,600
n	0210	Control joint, clean out control joint of debris_WALLS	27.00	lf	2	-	-			-	0.073 /lf	2
n	0366	Control joint, joint sealant, polyurethane, 1/4" x 1/4" (308 LF/Gal)_WALLS	27.00	lf	44	4	-		-	-	1.790 /lf	48
	0020	Concrete finishing, walls, includes breaking ties and patching voids	1,068.00	sf	870	43	-		-	-	0.855 /sf	913
	0050	Concrete finishing, walls, burlap rub with grout, includes breaking ties and patching voids	534.00	sf	522	21	-		-	-	1.018 /sf	543
		03 11 13.804 12" CIP Wall			*13,392*	*13,739*			*186*		*1,365.836/CY*	*27,317*
		20.00 CY										
		232.774 Labor hours										
		5.134 Equipment hours										
		03 11 13.804.45 Grade Wall, 12" High x 12" Wide x 534 LF			*13,392*	*13,739*	*0*		*186*	*0*	*1,365.836/CY*	*27,317*
		20.00 CY										
		232.774 Labor hours										
		5.134 Equipment hours										
03 41 33.000.15		*Double Tee Roof x 3,190 SF*										
03 41 33.000		*Precast and Prestressed Concrete*										
	0300	Precast tees, double, floor, 30' span, prestressed	3,189.99	SF	3,074	45,457	-		1,604	-	15.717 /SF	50,136
		03 41 33.000 Precast and Prestressed Concrete			*3,074*	*45,457*			*1,604*		*15.717/SF*	*50,136*
		3,189.99 SF										
		47.850 Labor hours										
		5.317 Equipment hours										

Central Kitsap Treatment Plant Solids Handling

Kitsap County

Detail Report - Direct Costs

Item	Description	Takeoff Qty		Labor Amount	Material Amount	Subcontract Amount	Subcontract Name	Equipment Amount	Other Amount	Total Unit Cost	Total Amount
	03 41 33.000.15 Double Tee Roof x 3,190 SF			*3,074*	*45,457*	*0*		*1,604*	*0*	*15.717/SF*	*50,136*
	3,189.99 SF										
	47.850 Labor hours										
	5.317 Equipment hours										
	DIVISION 03 CONCRETE			**154,205**	**244,189**	**0**		**9,750**	**0**	**940.424/CY**	**408,144**
	434.00 CY										
	2,673.088 Labor hours										
	216.817 Equipment hours										
DIVISION 07	**THERMAL, MOISTURE PROTECTION**										
07 51 00.000.15	*Built Up Roofing System PVC x 3,190 SF*										
07 51 00.000	*Built-Up Roofing System (BUR)*										
0800	Aluminum coping, stock units, for 12" wall, excludes scaffolding	260.00	lf	3,656	811	-		-	-	17.180 /lf	4,467
2780	2" x 8" miscellaneous wood blocking, to steel construction, per M.B.F.	0.26	mbf	784	377	-		-	-	4,465.08 /mbf	1,161
2780	2" x 8" miscellaneous wood blocking, to steel construction, per M.B.F.	1.039	mbf	3,131	1,508	-		-	-	4,464.928 /mbf	4,639
2700	Elastomeric sheet waterproofing, polyvinyl chloride sheets, plain, 30 mils thick	3,190.00	SF	6,378	991	-		-	-	2.310 /SF	7,369
1725	Polyisocyanurate insulation, for roof decks, 2" thick, 2#/CF density, fastening excluded	3,190.00	sf	1,245	3,221	-		-	-	1.400 /sf	4,466
1745	Polyisocyanurate insulation, for roof decks, 3" thick, 2#/CF density, fastening excluded	3,190.00	sf	1,371	4,817	-		-	-	1.940 /sf	6,189
0825	Asphalt shingles, #30 felt underlayment	32.00	sq	309	376	-		-	-	21.39 /sq	684
0100	Sheet metal flashing, aluminum, flexible, mill finish, .032" thick, including up to 4 bends	452.00	sf	1,743	2,587	-		-	-	9.580 /sf	4,330
	07 51 00.000 Built-Up Roofing System (BUR)			*18,616*	*14,688*					*10.440/SF*	*33,305*
	3,190.00 SF										
	350.248 Labor hours										
	07 51 00.000.15 Built Up Roofing System PVC x 3,190 SF			*18,616*	*14,688*	*0*		*0*	*0*	*10.440/SF*	*33,305*
	3,190.00 SF										
	350.248 Labor hours										
	DIVISION 07 THERMAL, MOISTURE PROTECTION			**18,616**	**14,688**	**0**		**0**	**0**	**10.440/SF**	**33,305**
	3,190.00 SF										
	350.248 Labor hours										

AACE Classification Accuracy Range

Upper Range +50% **Lower Range -30%**

Central Kitsap Treatment Plant Solids Handling

Kitsap County

Detail Report - Direct Costs

Item	Description	Takeoff Qty		Labor Amount	Material Amount	Subcontract Amount	Subcontract Name	Equipment Amount	Other Amount	Total Unit Cost	Total Amount
	DIVISION 07 THERMAL, MOISTURE PROTECTION			**18,616**	**14,688**	**0**		**0**	**0**	**10.440/SF**	**33,305**
	3,190.00 SF										
	350.248 Labor hours										
DIVISION 08	**OPENINGS**										
08 11 00.030.25	*Exterior Door, 3' x 7'*										
08 11 00.030	*Metal Doors & Frames (3070)*										
1000	Frames, steel, knock down, hollow metal, single, 16 ga., up to 4-7/8" deep, 3'-0" x 7'-0"	1.00	EA	59	195	-		-	-	253.60 /EA	254
5050	Doors, aluminum, commercial entrance, flush panel doors, single, 3'-0" x 7'-0", incl. hinges, push/pull, deadlock, cylinder, threshold, excl. glazing	1.00	ea	413	860	-		-	-	1,273.120 /ea	1,273
3000	Door hardware, panic device, narrow stile, mortise bar, exit only	1.00	ea	117	600	-		-	-	717.20 /ea	717
0011	Thresholds, aluminum, 3' long door saddles	3.00	lf	29	36	-		-	-	21.817 /lf	65
1430	Door hardware, hinges, full mortise, high frequency, brass base, US10, 4-1/2" x 4-1/2"	1.50	pr	-	91	-		-	-	60.50 /pr	91
1200	Paints & coatings, exterior, door & frame, one side, flush, 1 coat, 3' x 7'	1.00	ea	23	2	-		-	-	25.65 /ea	26
	08 11 00.030 Metal Doors & Frames (3070)			*642*	*1,784*					*2,425.77 /EA*	*2,426*
	1.00 EA										
	10.371 Labor hours										
	08 11 00.030.25 Exterior Door, 3' x 7'			*642*	*1,784*	*0*		*0*	*0*	*2,425.77 /EA*	*2,426*
	1.00 EA										
	10.371 Labor hours										
08 11 00.060.30	*Exterior Door, 6' x 7'*										
08 11 00.060	*Metal Doors & Frames (6070)*										
3620	Frames, steel, knock down, hollow metal, 14 gauge, up to 5-3/4" D, 7'-0" H, 6'-0" W, double	3.00	EA	234	705	-		-	-	313.133 /EA	939
5100	Doors, aluminum, commercial entrance, flush panel doors, pair of, 3'-0" x 7'-0", incl. hinges, push/pull, deadlock, cylinder, threshold, excl. glazing	3.00	pr	1,549	4,875	-		-	-	2,141.40 /pr	6,424
3000	Door hardware, panic device, narrow stile, mortise bar, exit only	6.00	ea	703	3,600	-		-	-	717.20 /ea	4,303
0011	Thresholds, aluminum, 3' long door saddles	18.00	lf	176	217	-		-	-	21.817 /lf	393
1430	Door hardware, hinges, full mortise, high frequency, brass base, US10, 4-1/2" x 4-1/2"	9.00	pr	-	545	-		-	-	60.50 /pr	545

Central Kitsap Treatment Plant Solids Handling

Kitsap County

Detail Report - Direct Costs

Item		Description	Takeoff Qty		Labor Amount	Material Amount	Subcontract Amount	Name	Equipment Amount	Other Amount	Total Unit Cost	Total Amount
08 11 00.060		*Metal Doors & Frames (6070)*										
	1200	Paints & coatings, exterior, door & frame, one side, flush, 1 coat, 3' x 7'	6.00	ea	140	14	-		-	-	25.655 /ea	154
		08 11 00.060 Metal Doors & Frames (6070)			*2,803*	*9,955*					*4,252.643/EA*	*12,758*
		3.00 EA										
		45.824 Labor hours										
		08 11 00.060.30 Exterior Door, 6' x 7'			*2,803*	*9,955*	*0*		*0*	*0*	*4,252.643/EA*	*12,758*
		3.00 EA										
		45.824 Labor hours										
08 36 15.000.10		*Overhead Door, 14' x 14'*										
08 36 15.000		*Overhead Door - Sectional Steel*										
	0500	Doors, rolling service, steel, manual, 20 gauge, 14' x 14' high, incl. hardware	1.00	EA	1,291	3,225	-		-	-	4,516.00 /EA	4,516
	3300	Doors, rolling service, steel, manual, for enamel finish, add	196.00	sf	-	431	-		-	-	2.20 /sf	431
	3700	Doors, rolling service, steel, manual, for safety edge bottom bar, electric, add	14.00	lf	-	630	-		-	-	45.00 /lf	630
	4000	Doors, rolling service, steel, manual, for weatherstripping, extruded rubber, jambs, add	42.00	lf	-	659	-		-	-	15.70 /lf	659
	4500	Doors, rolling service, steel, manual, motor operators for, to 14' x 14' opening	1.00	ea	207	1,200	-		-	-	1,406.56 /ea	1,407
	4700	Doors, rolling service, steel, manual, for fire door, additional fusible link, add	1.00	ea	-	31	-		-	-	31.00 /ea	31
		08 36 15.000 Overhead Door - Sectional Steel			*1,498*	*6,177*					*7,674.16 /EA*	*7,674*
		1.00 EA										
		23.20 Labor hours										
		08 36 15.000.10 Overhead Door, 14' x 14'			*1,498*	*6,177*	*0*		*0*	*0*	*7,674.16 /EA*	*7,674*
		1.00 EA										
		23.20 Labor hours										
		DIVISION 08 OPENINGS			**4,942**	**17,916**	**0**		**0**	**0**	**4,571.572/EA**	**22,858**
		5.00 EA										
		79.394 Labor hours										

DIVISION 31 EARTHWORK

31.23.10.P005 *Excavation, Backfill, and Haul Off-Site*

31 23 10.000 *Excavation, Backfill, and Haul Off-Site*

Central Kitsap Treatment Plant Solids Handling

Kitsap County

Detail Report - Direct Costs

Item		Description	Takeoff Qty		Labor Amount	Material Amount	Subcontract Amount	Subcontract Name	Equipment Amount	Other Amount	Total Unit Cost	Total Amount
31 23 10.000		*Excavation, Backfill, and Haul Off-Site*										
n	6260	Strt excvt for minor strtr,bank measr,for sprd and mat ftngs,elvtr pits,and small bldng fndtn,sandy clay loam,2 cy bucket,machin excvtn,hydrlc backhoe	855.00	CY	3,596	-	-		4,006	-	8.891 /CY	7,602
	4010	Backfill, structural, sandy clay & loam, 200 H.P. dozer, 50' haul, from existing stockpile, excludes compaction	460.00	CY	131	-	-		302	-	0.942 /CY	433
	4060	Borrow, common earth, 1-1/2 C.Y. bucket, loading and/or spreading, front end loader, wheel-mounted	460.00	CY	329	3,680	-		214	-	9.179 /CY	4,222
n	0560	Hauling,excavated borrow material,loose cubic yards,20 mile round trip,0.4 load/hr,base wide rate,12 cy truck,highway haulers,excludes loading	500.00	CY	5,687	-	-		7,814	-	27.002 /CY	13,501
	0400	Compaction, structural, select fill, 8" lifts, sheepsfoot or wobbly wheel roller	460.00	CY	213	-	-		440	-	1.418 /CY	652
		31 23 10.000 Excavation, Backfill, and Haul Off-Site			*9,955*	*3,680*			*12,776*		*9.657/CY*	*26,411*
		2,735.00 CY										
		177.536 Labor hours										
		141.990 Equipment hours										
		31.23.10.P005 Excavation, Backfill, and Haul Off-Site			*9,955*	*3,680*	*0*		*12,776*	*0*	*9.657/CY*	*26,411*
		2,735.00 CY										
		177.536 Labor hours										
		141.990 Equipment hours										
		DIVISION 31 EARTHWORK			**9,955**	**3,680**	**0**		**12,776**	**0**	**9.657/CY**	**26,411**
		2,735.00 CY										
		177.536 Labor hours										
		141.990 Equipment hours										
DIVISION 46		**WATER AND WASTEWATER EQUIPMENT**										
46.73.41.000		*Hot Water Boiler*										
46 73 41.000		*Hot Water Boiler*										
	0110	Digester, Boilers, Natural Gas Fired	2.00	EA	20,800	480,000			9,600		255,200.00 /EA	510,400
	0110	Boiler control panel	1.00	ea	1,040	40,000			480		41,520.00 /ea	41,520
	0110	Allowance - Hot water pumps	1.00	LS	5,200	40,000			2,400		47,600.00 /LS	47,600
		46 73 41.000 Hot Water Boiler			*27,040*	*560,000*			*12,480*		*299,760.00 /EA*	*599,520*
		2.00 EA										
		416.00 Labor hours										
		416.00 Equipment hours										

Central Kitsap Treatment Plant Solids Handling

Kitsap County

Detail Report - Direct Costs

Item	Description	Takeoff Qty	Labor Amount	Material Amount	Subcontract Amount	Subcontract Name	Equipment Amount	Other Amount	Total Unit Cost	Total Amount
	46.73.41.000 Hot Water Boiler		*27,040*	*560,000*	*0*		*12,480*	*0*	*299,760.00 /EA*	*599,520*
	2.00 EA									
	416.00 Labor hours									
	416.00 Equipment hours									
	DIVISION 46 WATER AND WASTEWATER EQUIPMENT		**27,040**	**560,000**	**0**		**12,480**	**0**	**299,760.00 /EA**	**599,520**
	2.00 EA									
	416.00 Labor hours									
	416.00 Equipment hours									
	630 DIGESTER CONTROL BUILDING		***214,759***	***840,473***	***0***		***35,005***	***0***	***341.767/BSF***	***1,090,238***
	3,190.00 BSF									
	3,696.267 Labor hours									
	774.807 Equipment hours									

819 FOG RECEIVING BUILDING

DIVISION 03 **CONCRETE**

03 11 13.154.05 *Concrete Footing, 12" High x 2' Wide x 91 LF*

03 11 13.154		*Cont. Footing 60" x 18"*									
	3050	C.I.P. concrete forms, slab on grade, edge, wood, 7" to 12" high, 4 use, includes erecting, bracing, stripping and cleaning	186.00	sfca	763	227	-	-	-	5.322 /sfca	990
n	9015	C.I.P. concrete forms, bulkhead for slab on grade w/ keyway, up to 12", exp metal, includes erecting, bracing, stripping and cleaning	9.10	sfca	22	4	-	-	-	2.895 /sfca	26
n	2050	Reinforcing steel, unload and sort, add to base_SLAB ON GRADE	0.613	ton	22	-	-	13	-	56.82 /ton	35
	0600	Reinforcing steel, in place, slab on grade, #3 to #7, A615, grade 60, incl labor for accessories, excl material for accessories	0.613	ton	551	889	-	-	-	2,348.09 /ton	1,439
	2220	Reinforcing steel, crane cost for handling, 90 picks/day, up to 0.5 Ton/day	0.613	ton	63	-	-	37	-	162.32 /ton	100
	4650	Structural concrete, placing, slab on grade, pumped, over 6" thick, includes leveling (strike off) & consolidation, excludes material	0.70	cy	12	-	-	2	-	20.214 /cy	14
	4650	Structural concrete, placing, slab on grade, pumped, over 6" thick, includes leveling (strike off) & consolidation, excludes material	7.00	cy	123	-	-	19	-	20.206 /cy	141

Central Kitsap Treatment Plant Solids Handling

Kitsap County

Detail Report - Direct Costs

	Item	Description	Takeoff Qty		Labor Amount	Material Amount	Subcontract Amount	Subcontract Name	Equipment Amount	Other Amount	Total Unit Cost	Total Amount
03 11 13.154		*Cont. Footing 60" x 18"*										
n	0725	Struct SLAB ON GRADE concrete,ready mix,normal wt,4500 psi,includes local aggregate,sand,portland cement and water,delivered, includes all additives	0.70	cy	-	161	-		-	-	230.00 /cy	161
n	0725	Struct SLAB ON GRADE concrete,ready mix,normal wt,4500 psi,includes local aggregate,sand,portland cement and water,delivered, includes all additives	7.00	CY	-	1,610	-		-	-	230.00 /CY	1,610
n	0255	Concrete finishing, floors, manual screed, bull float, machine float & steel trowel (walk-behind)_SOG	182.00	sf	133	-	-		10	-	0.787 /sf	143
n	0122	Control joint, concrete floor slab, sawcut in green concrete, 1" depth_SOG	9.10	lf	4	0	-		1	-	0.529 /lf	5
n	0215	Control joint, clean out control joint of debris_SOG	9.10	lf	1	-	-			-	0.074 /lf	1
n	0367	Control joint, joint sealant, polyurethane, 1/4" x 1/4" (308 LF/Gal)_SOG	18.20	lf	30	3	-		-	-	1.790 /lf	33
n	0310	Concrete surface treatment, curing, sprayed membrane compound_SOG	1.82	csf	14	14	-		-	-	15.407 /csf	28
	1200	Vapor retarders, building paper, polyethylene vapor barrier, standard, 10 mil (.010" thick)	1.82	sq	23	15	-		-	-	20.82 /sq	38
n	1310	Fill, gravel fill, compacted, under floor slabs, alternate pricing method, 12" deep_SOG	8.00	ecy	87	256	-		10	-	44.144 /ecy	353
n	1136	Hauling, excavated borrow material, loose cubic yards, 20 mile round trip, 0.4 loads/hour, 16.5 c.y. dump trailer, highway haulers, excludes loading	8.00	lcy	66	-	-		99	-	20.626 /lcy	165
		03 11 13.154 Cont. Footing 60" x 18"			*1,914*	*3,178*			*189*		*754.566/CY*	*5,282*
		7.00 CY										
		33.399 Labor hours										
		4.734 Equipment hours										
		03 11 13.154.05 Concrete Footing, 12" High x 2' Wide x 91 LF			*1,914*	*3,178*	*0*		*189*	*0*	*754.566/CY*	*5,282*
		7.00 CY										
		33.399 Labor hours										
		4.734 Equipment hours										
03 11 13.303.05		*Lower Level Concrete Slab, 12" Thick x 276 SF*										
03 11 13.504		*12" Slab on Grade*										
	3050	C.I.P. concrete forms, slab on grade, edge, wood, 7" to 12" high, 4 use, includes erecting, bracing, stripping and cleaning	66.452	sfca	273	81	-		-	-	5.322 /sfca	354
n	9015	C.I.P. concrete forms, bulkhead for slab on grade w/ keyway, up to 12", exp metal, includes erecting, bracing, stripping and cleaning	13.80	sfca	34	6	-		-	-	2.894 /sfca	40
n	2050	Reinforcing steel, unload and sort, add to base_SLAB ON GRADE	0.963	ton	35	-	-		20	-	56.82 /ton	55

Central Kitsap Treatment Plant Solids Handling

Kitsap County

Detail Report - Direct Costs

	Item	Description	Takeoff Qty		Labor Amount	Material Amount	Subcontract Amount	Subcontract Name	Equipment Amount	Other Amount	Total Unit Cost	Total Amount
03 11 13.504		*12" Slab on Grade*										
	0600	Reinforcing steel, in place, slab on grade, #3 to #7, A615, grade 60, incl labor for accessories, excl material for accessories	0.963	ton	865	1,396	-		-	-	2,348.09 /ton	2,261
	2220	Reinforcing steel, crane cost for handling, 90 picks/day, up to 0.5 Ton/day	0.963	ton	99	-	-		57	-	162.330 /ton	156
	4650	Structural concrete, placing, slab on grade, pumped, over 6" thick, includes leveling (strike off) & consolidation, excludes material	1.10	cy	19	-	-		3	-	20.21 /cy	22
	4650	Structural concrete, placing, slab on grade, pumped, over 6" thick, includes leveling (strike off) & consolidation, excludes material	11.00	cy	193	-	-		29	-	20.205 /cy	222
n	0725	Struct SLAB ON GRADE concrete,ready mix,normal wt,4500 psi,includes local aggregate,sand,portland cement and water,delivered, includes all additives	1.10	cy	-	253	-		-	-	230.00 /cy	253
n	0725	Struct SLAB ON GRADE concrete,ready mix,normal wt,4500 psi,includes local aggregate,sand,portland cement and water,delivered, includes all additives	11.00	CY	-	2,530	-		-	-	230.00 /CY	2,530
n	0255	Concrete finishing, floors, manual screed, bull float, machine float & steel trowel (walk-behind)_SOG	275.992	sf	202	-	-		15	-	0.787 /sf	217
n	0122	Control joint, concrete floor slab, sawcut in green concrete, 1" depth_SOG	13.80	lf	6	0	-		1	-	0.529 /lf	7
n	0215	Control joint, clean out control joint of debris_SOG	13.80	lf	1	-	-			-	0.073 /lf	1
n	0367	Control joint, joint sealant, polyurethane, 1/4" x 1/4" (308 LF/Gal)_SOG	27.599	lf	45	4	-		-	-	1.79 /lf	49
n	0310	Concrete surface treatment, curing, sprayed membrane compound_SOG	2.76	csf	22	21	-		-	-	15.406 /csf	43
	1200	Vapor retarders, building paper, polyethylene vapor barrier, standard, 10 mil (.010" thick)	2.76	sq	35	22	-		-	-	20.819 /sq	57
n	1310	Fill, gravel fill, compacted, under floor slabs, alternate pricing method, 12" deep_SOG	12.00	ecy	131	384	-		15	-	44.143 /ecy	530
n	1136	Hauling, excavated borrow material, loose cubic yards, 20 mile round trip, 0.4 loads/hour, 16.5 c.y. dump trailer, highway haulers, excludes loading	12.00	lcy	99	-	-		149	-	20.626 /lcy	248
		03 11 13.504 12" Slab on Grade			*2,058*	*4,699*			*289*		*640.502/CY*	*7,046*
		11.00 CY										
		35.423 Labor hours										
		7.200 Equipment hours										
		03 11 13.303.05 Lower Level Concrete Slab, 12" Thick x 276 SF			*2,058*	*4,699*	*0*		*289*	*0*	*640.502/CY*	*7,046*
		11.00 CY										
		35.423 Labor hours										
		7.200 Equipment hours										

Central Kitsap Treatment Plant Solids Handling

Kitsap County

Detail Report - Direct Costs

	Item	Description	Takeoff Qty		Labor Amount	Material Amount	Subcontract Amount	Subcontract Name	Equipment Amount	Other Amount	Total Unit Cost	Total Amount
03 11 13.303.10		*Elevated Roof Slab, 12" Thick x 1,258 SF*										
03 11 13.303		*12" Elevated Slab*										
	3050	C.I.P. concrete forms, slab on grade, edge, wood, 7" to 12" high, 4 use, includes erecting, bracing, stripping and cleaning	141.872	sfca	582	173	-		-	-	5.322 /sfca	755
n	9015	C.I.P. concrete forms, bulkhead for slab on grade w/ keyway, up to 12", exp metal, includes erecting, bracing, stripping and cleaning	62.899	sfca	154	28	-		-	-	2.894 /sfca	182
n	2050	Reinforcing steel, unload and sort, add to base_SLAB ON GRADE	4.113	ton	148	-	-		86	-	56.817 /ton	234
	0600	Reinforcing steel, in place, slab on grade, #3 to #7, A615, grade 60, incl labor for accessories, excl material for accessories	4.113	ton	3,694	5,964	-		-	-	2,348.087 /ton	9,658
	2220	Reinforcing steel, crane cost for handling, 90 picks/day, up to 0.5 Ton/day	4.113	ton	423	-	-		245	-	162.330 /ton	668
	4650	Structural concrete, placing, slab on grade, pumped, over 6" thick, includes leveling (strike off) & consolidation, excludes material	4.70	cy	82	-	-		13	-	20.206 /cy	95
	4650	Structural concrete, placing, slab on grade, pumped, over 6" thick, includes leveling (strike off) & consolidation, excludes material	47.00	cy	824	-	-		125	-	20.206 /cy	950
n	0725	Struct SLAB ON GRADE concrete,ready mix,normal wt,4500 psi,includes local aggregate,sand,portland cement and water,delivered, includes all additives	47.00	CY	-	10,810	-		-	-	230.00 /CY	10,810
n	0725	Struct SLAB ON GRADE concrete,ready mix,normal wt,4500 psi,includes local aggregate,sand,portland cement and water,delivered, includes all additives	4.70	cy	-	1,081	-		-	-	230.00 /cy	1,081
n	0255	Concrete finishing, floors, manual screed, bull float, machine float & steel trowel (walk-behind)_SOG	1,257.979	sf	922	-	-		68	-	0.787 /sf	990
n	0122	Control joint, concrete floor slab, sawcut in green concrete, 1" depth_SOG	62.899	lf	28	2	-		4	-	0.529 /lf	33
n	0215	Control joint, clean out control joint of debris_SOG	62.899	lf	5	-	-			-	0.073 /lf	5
n	0367	Control joint, joint sealant, polyurethane, 1/4" x 1/4" (308 LF/Gal)_SOG	125.798	lf	205	20	-		-	-	1.790 /lf	225
n	0310	Concrete surface treatment, curing, sprayed membrane compound_SOG	12.58	csf	100	94	-		-	-	15.408 /csf	194
	1200	Vapor retarders, building paper, polyethylene vapor barrier, standard, 10 mil (.010" thick)	12.58	sq	159	103	-		-	-	20.820 /sq	262
n	1310	Fill, gravel fill, compacted, under floor slabs, alternate pricing method, 12" deep_SOG	54.00	ecy	589	1,728	-		67	-	44.143 /ecy	2,384
n	1136	Hauling, excavated borrow material, loose cubic yards, 20 mile round trip, 0.4 loads/hour, 16.5 c.y. dump trailer, highway haulers, excludes loading	54.00	lcy	444	-	-		670	-	20.626 /lcy	1,114

Central Kitsap Treatment Plant Solids Handling

Kitsap County

Detail Report - Direct Costs

	Item	Description	Takeoff Qty		Labor Amount	Material Amount	Subcontract Amount	Subcontract Name	Equipment Amount	Other Amount	Total Unit Cost	Total Amount
		03 11 13.303 12" Elevated Slab			*8,358*	*20,003*			*1,277*		*630.603/CY*	*29,638*
		47.00 CY										
		143.721 Labor hours										
		32.054 Equipment hours										
		03 11 13.303.10 Elevated Roof Slab, 12" Thick x 1,258 SF			*8,358*	*20,003*	*0*		*1,277*	*0*	*630.603/CY*	*29,638*
		47.00 CY										
		143.721 Labor hours										
		32.054 Equipment hours										
03 11 13.306.05		*Lower Level Concrete Slab, 18" Thick x 131 SF*										
03 11 13.506		*18" Slab on Grade*										
	3050	C.I.P. concrete forms, slab on grade, edge, wood, 7" to 12" high, 4 use, includes erecting, bracing, stripping and cleaning	68.70	sfca	282	84	-		-	-	5.322 /sfca	366
n	9015	C.I.P. concrete forms, bulkhead for slab on grade w/ keyway, up to 12", exp metal, includes erecting, bracing, stripping and cleaning	9.833	sfca	24	4	-		-	-	2.893 /sfca	28
n	2050	Reinforcing steel, unload and sort, add to base_SLAB ON GRADE	0.70	ton	25	-	-		15	-	56.81 /ton	40
	0600	Reinforcing steel, in place, slab on grade, #3 to #7, A615, grade 60, incl labor for accessories, excl material for accessories	0.70	ton	629	1,015	-		-	-	2,348.086 /ton	1,644
	2220	Reinforcing steel, crane cost for handling, 90 picks/day, up to 0.5 Ton/day	0.70	ton	72	-	-		42	-	162.330 /ton	114
	4650	Structural concrete, placing, slab on grade, pumped, over 6" thick, includes leveling (strike off) & consolidation, excludes material	0.80	cy	14	-	-		2	-	20.20 /cy	16
	4650	Structural concrete, placing, slab on grade, pumped, over 6" thick, includes leveling (strike off) & consolidation, excludes material	8.00	cy	140	-	-		21	-	20.206 /cy	162
n	0725	Struct SLAB ON GRADE concrete,ready mix,normal wt,4500 psi,includes local aggregate,sand,portland cement and water,delivered, includes all additives	0.80	cy	-	184	-		-	-	230.00 /cy	184
n	0725	Struct SLAB ON GRADE concrete,ready mix,normal wt,4500 psi,includes local aggregate,sand,portland cement and water,delivered, includes all additives	8.00	CY	-	1,840	-		-	-	230.00 /CY	1,840
n	0255	Concrete finishing, floors, manual screed, bull float, machine float & steel trowel (walk-behind)_SOG	131.103	sf	96	-	-		7	-	0.787 /sf	103
n	0122	Control joint, concrete floor slab, sawcut in green concrete, 1" depth_SOG	6.555	lf	3	0	-		0	-	0.53 /lf	3
n	0215	Control joint, clean out control joint of debris_SOG	6.555	lf	0	-	-			-	0.073 /lf	0
n	0367	Control joint, joint sealant, polyurethane, 1/4" x 1/4" (308 LF/Gal)_SOG	13.11	lf	21	2	-		-	-	1.790 /lf	23

Central Kitsap Treatment Plant Solids Handling

Kitsap County

Detail Report - Direct Costs

	Item	Description	Takeoff Qty		Labor Amount	Material Amount	Subcontract Amount	Name	Equipment Amount	Other Amount	Total Unit Cost	Total Amount
03 11 13.506		*18" Slab on Grade*										
n	0310	Concrete surface treatment, curing, sprayed membrane compound_SOG	1.311	csf	10	10	-		-	-	15.41 /csf	20
	1200	Vapor retarders, building paper, polyethylene vapor barrier, standard, 10 mil (.010" thick)	1.311	sq	17	11	-		-	-	20.816 /sq	27
n	1310	Fill, gravel fill, compacted, under floor slabs, alternate pricing method, 12" deep_SOG	6.00	ecy	65	192	-		7	-	44.143 /ecy	265
n	1136	Hauling, excavated borrow material, loose cubic yards, 20 mile round trip, 0.4 loads/hour, 16.5 c.y. dump trailer, highway haulers, excludes loading	6.00	lcy	49	-	-		74	-	20.625 /lcy	124
		03 11 13.506 18" Slab on Grade			*1,449*	*3,342*			*169*		*619.958/CY*	*4,960*
		8.00 CY										
		24.766 Labor hours										
		3.991 Equipment hours										
		03 11 13.306.05 Lower Level Concrete Slab, 18" Thick x 131 SF			*1,449*	*3,342*	*0*		*169*	*0*	*619.958/CY*	*4,960*
		8.00 CY										
		24.766 Labor hours										
		3.991 Equipment hours										
03 11 13.504.60		*1st Level Concrete Slab, 12" Thick x 1,258 SF*										
03 11 13.504		*12" Slab on Grade*										
	3050	C.I.P. concrete forms, slab on grade, edge, wood, 7" to 12" high, 4 use, includes erecting, bracing, stripping and cleaning	141.872	sfca	582	173	-		-	-	5.322 /sfca	755
n	9015	C.I.P. concrete forms, bulkhead for slab on grade w/ keyway, up to 12", exp metal, includes erecting, bracing, stripping and cleaning	62.899	sfca	154	28	-		-	-	2.894 /sfca	182
n	2050	Reinforcing steel, unload and sort, add to base_SLAB ON GRADE	4.113	ton	148	-	-		86	-	56.817 /ton	234
	0600	Reinforcing steel, in place, slab on grade, #3 to #7, A615, grade 60, incl labor for accessories, excl material for accessories	4.113	ton	3,694	5,964	-		-	-	2,348.087 /ton	9,658
	2220	Reinforcing steel, crane cost for handling, 90 picks/day, up to 0.5 Ton/day	4.113	ton	423	-	-		245	-	162.330 /ton	668
	4650	Structural concrete, placing, slab on grade, pumped, over 6" thick, includes leveling (strike off) & consolidation, excludes material	47.00	cy	824	-	-		125	-	20.206 /cy	950
	4650	Structural concrete, placing, slab on grade, pumped, over 6" thick, includes leveling (strike off) & consolidation, excludes material	4.70	cy	82	-	-		13	-	20.206 /cy	95
n	0725	Struct SLAB ON GRADE concrete,ready mix,normal wt,4500 psi,includes local aggregate,sand,portland cement and water,delivered, includes all additives	47.00	CY	-	7,621	-		-	-	162.15 /CY	7,621

Central Kitsap Treatment Plant Solids Handling

Kitsap County

Detail Report - Direct Costs

	Item	Description	Takeoff Qty		Labor Amount	Material Amount	Subcontract Amount	Subcontract Name	Equipment Amount	Other Amount	Total Unit Cost	Total Amount
03 11 13.504		*12" Slab on Grade*										
n	0725	Struct SLAB ON GRADE concrete,ready mix,normal wt,4500 psi,includes local aggregate,sand,portland cement and water,delivered, includes all additives	4.70	cy	-	762	-		-	-	162.15 /cy	762
n	0255	Concrete finishing, floors, manual screed, bull float, machine float & steel trowel (walk-behind)_SOG	1,257.979	sf	922	-	-		68	-	0.787 /sf	990
n	0122	Control joint, concrete floor slab, sawcut in green concrete, 1" depth_SOG	62.899	lf	28	2	-		4	-	0.529 /lf	33
n	0215	Control joint, clean out control joint of debris_SOG	62.899	lf	5	-	-			-	0.073 /lf	5
n	0367	Control joint, joint sealant, polyurethane, 1/4" x 1/4" (308 LF/Gal)_SOG	125.798	lf	205	20	-		-	-	1.790 /lf	225
n	0310	Concrete surface treatment, curing, sprayed membrane compound_SOG	12.58	csf	100	94	-		-	-	15.408 /csf	194
	1200	Vapor retarders, building paper, polyethylene vapor barrier, standard, 10 mil (.010" thick)	12.58	sq	159	103	-		-	-	20.820 /sq	262
n	1310	Fill, gravel fill, compacted, under floor slabs, alternate pricing method, 12" deep_SOG	54.00	ecy	589	1,728	-		67	-	44.143 /ecy	2,384
n	1136	Hauling, excavated borrow material, loose cubic yards, 20 mile round trip, 0.4 loads/hour, 16.5 c.y. dump trailer, highway haulers, excludes loading	54.00	lcy	444	-	-		670	-	20.626 /lcy	1,114
		03 11 13.504 12" Slab on Grade			*8,358*	*16,495*			*1,277*		*555.969/CY*	*26,131*
		47.00 CY										
		143.721 Labor hours										
		32.054 Equipment hours										
		03 11 13.504.60 1st Level Concrete Slab, 12" Thick x 1,258 SF			*8,358*	*16,495*	*0*		*1,277*	*0*	*555.969/CY*	*26,131*
		47.00 CY										
		143.721 Labor hours										
		32.054 Equipment hours										
03 11 13.804.05		*Concrete Wall, 20' High x 150 LF*										
03 11 13.804		*12" CIP Wall*										
	0500	C.I.P. concrete forms, wall, wood bulkhead with 2 piece keyway, 1 use, includes erecting, bracing, stripping and cleaning	150.00	lf	1,559	510	-		-	-	13.792 /lf	2,069
	2550	C.I.P. concrete forms, wall, job built, plywood, over 8' to 16' high, 4 use, includes erecting, bracing, stripping and cleaning	6,000.00	sfca	41,833	5,940	-		-	-	7.962 /sfca	47,773
	5200	Chamfer strip, wood, 3/4" wide	300.00	lf	268	42	-		-	-	1.033 /lf	310
	1400	Tie cones, plastic, for coil tie system, for CIP wall forms, 1/2" bolt diameter x 1" setback length, includes material only	5.00	c	-	325	-		-	-	65.00 /c	325
n	3010	Waterstop, rubber, center bulb, 1/4" thick x 6" wide_WALLS	300.00	lf	970	2,250	-		-	-	10.733 /lf	3,220

Central Kitsap Treatment Plant Solids Handling

Kitsap County

Detail Report - Direct Costs

	Item	Description	Takeoff Qty		Labor Amount	Material Amount	Subcontract Amount	Subcontract Name	Equipment Amount	Other Amount	Total Unit Cost	Total Amount
03 11 13.804		*12" CIP Wall*										
	0100	Splice rebar, standard, self-aligning type, taper threaded, #4 bars, includes holding rebar in place while splicing	123.20	ea	1,056	1,577	-		-	-	21.373 /ea	2,633
n	2020	Reinforcing steel, unload and sort, add to base_WALLS	11.20	ton	403	-	-		234	-	56.816 /ton	636
n	2214	Reinforcing steel, crane cost for handling, average, add_WALLS	11.20	ton	438	-	-		254	-	61.758 /ton	692
	0700	Reinforcing steel, in place, walls, #3 to #7, A615, grade 60, incl labor for accessories, excl material for accessories	11.20	ton	7,712	16,240	-		-	-	2,138.533 /ton	23,952
	5100	Structural concrete, placing, walls, pumped, 12" thick, includes leveling (strike off) & consolidation, excludes material	11.20	cy	330	-	-		50	-	33.983 /cy	381
	5100	Structural concrete, placing, walls, pumped, 12" thick, includes leveling (strike off) & consolidation, excludes material	112.00	cy	3,303	-	-		503	-	33.983 /cy	3,806
n	0525	Struct WALLS concrete,ready mix,normal wt,4500 psi,includes local aggregate,sand,portland cement and water,delivered, includes all additives	11.20	cy	-	2,576	-		-	-	230.00 /cy	2,576
n	0525	Struct WALLS concrete,ready mix,normal wt,4500 psi,includes local aggregate,sand,portland cement and water,delivered, includes all additives	112.00	CY	-	25,760	-		-	-	230.00 /CY	25,760
n	0210	Control joint, clean out control joint of debris_WALLS	150.00	lf	11	-	-			-	0.073 /lf	11
n	0366	Control joint, joint sealant, polyurethane, 1/4" x 1/4" (308 LF/Gal)_WALLS	150.00	lf	244	24	-		-	-	1.790 /lf	268
	0020	Concrete finishing, walls, includes breaking ties and patching voids	6,000.00	sf	4,889	240	-		-	-	0.855 /sf	5,129
	0050	Concrete finishing, walls, burlap rub with grout, includes breaking ties and patching voids	3,000.00	sf	2,933	120	-		-	-	1.018 /sf	3,053
		03 11 13.804 12" CIP Wall			*65,949*	*55,604*			*1,041*		*1,094.586/CY*	*122,594*
		112.00 CY										
		1,149.258 Labor hours										
		28.750 Equipment hours										
		03 11 13.804.05 Concrete Wall, 20' High x 150 LF			*65,949*	*55,604*	*0*		*1,041*	*0*	*1,094.586/CY*	*122,594*
		112.00 CY										
		1,149.258 Labor hours										
		28.750 Equipment hours										
03 11 13.804.10		*Concrete Wall, 8' High x 56 LF*										
03 11 13.804		*12" CIP Wall*										
	0500	C.I.P. concrete forms, wall, wood bulkhead with 2 piece keyway, 1 use, includes erecting, bracing, stripping and cleaning	23.00	lf	239	78	-		-	-	13.793 /lf	317

AACE Classification Accuracy Range

Upper Range +50% **Lower Range -30%**

Central Kitsap Treatment Plant Solids Handling

Kitsap County

Detail Report - Direct Costs

	Item	Description	Takeoff Qty		Labor Amount	Material Amount	Subcontract Amount	Subcontract Name	Equipment Amount	Other Amount	Total Unit Cost	Total Amount
03 11 13.804		*12" CIP Wall*										
	2550	C.I.P. concrete forms, wall, job built, plywood, over 8' to 16' high, 4 use, includes erecting, bracing, stripping and cleaning	896.00	sfca	6,247	887	-		-	-	7.962 /sfca	7,134
	5200	Chamfer strip, wood, 3/4" wide	45.00	lf	40	6	-		-	-	1.033 /lf	46
	1400	Tie cones, plastic, for coil tie system, for CIP wall forms, 1/2" bolt diameter x 1" setback length, includes material only	1.00	c	-	65	-		-	-	65.00 /c	65
n	3010	Waterstop, rubber, center bulb, 1/4" thick x 6" wide_WALLS	79.00	lf	255	593	-		-	-	10.733 /lf	848
	0100	Splice rebar, standard, self-aligning type, taper threaded, #4 bars, includes holding rebar in place while splicing	18.70	ea	160	239	-		-	-	21.373 /ea	400
n	2020	Reinforcing steel, unload and sort, add to base_WALLS	1.70	ton	61	-	-		35	-	56.82 /ton	97
n	2214	Reinforcing steel, crane cost for handling, average, add_WALLS	1.70	ton	66	-	-		39	-	61.76 /ton	105
	0700	Reinforcing steel, in place, walls, #3 to #7, A615, grade 60, incl labor for accessories, excl material for accessories	1.70	ton	1,171	2,465	-		-	-	2,138.535 /ton	3,636
	5100	Structural concrete, placing, walls, pumped, 12" thick, includes leveling (strike off) & consolidation, excludes material	1.70	cy	50	-	-		8	-	33.98 /cy	58
	5100	Structural concrete, placing, walls, pumped, 12" thick, includes leveling (strike off) & consolidation, excludes material	17.00	cy	501	-	-		76	-	33.983 /cy	578
n	0525	Struct WALLS concrete,ready mix,normal wt,4500 psi,includes local aggregate,sand,portland cement and water,delivered, includes all additives	1.70	cy	-	391	-		-	-	230.00 /cy	391
n	0525	Struct WALLS concrete,ready mix,normal wt,4500 psi,includes local aggregate,sand,portland cement and water,delivered, includes all additives	17.00	CY	-	3,910	-		-	-	230.00 /CY	3,910
n	0210	Control joint, clean out control joint of debris_WALLS	23.00	lf	2	-	-			-	0.073 /lf	2
n	0366	Control joint, joint sealant, polyurethane, 1/4" x 1/4" (308 LF/Gal)_WALLS	23.00	lf	37	4	-		-	-	1.790 /lf	41
	0020	Concrete finishing, walls, includes breaking ties and patching voids	896.00	sf	730	36	-		-	-	0.855 /sf	766
	0050	Concrete finishing, walls, burlap rub with grout, includes breaking ties and patching voids	448.00	sf	438	18	-		-	-	1.018 /sf	456
		03 11 13.804 12" CIP Wall			*9,999*	*8,692*			*158*		*1,108.744/CY*	*18,849*
		17.00 CY										
		174.191 Labor hours										
		4.364 Equipment hours										
		03 11 13.804.10 Concrete Wall, 8' High x 56 LF			*9,999*	*8,692*	*0*		*158*	*0*	*1,108.744/CY*	*18,849*
		17.00 CY										
		174.191 Labor hours										
		4.364 Equipment hours										

AACE Classification Accuracy Range

Upper Range +50% **Lower Range -30%**

Central Kitsap Treatment Plant Solids Handling

Kitsap County

Detail Report - Direct Costs

	Item	Description	Takeoff Qty		Labor Amount	Material Amount	Subcontract Amount	Subcontract Name	Equipment Amount	Other Amount	Total Unit Cost	Total Amount
03 11 13.804.15		*Concrete Wall, 25' High x 34 LF*										
03 11 13.804		*12" CIP Wall*										
	0500	C.I.P. concrete forms, wall, wood bulkhead with 2 piece keyway, 1 use, includes erecting, bracing, stripping and cleaning	43.00	lf	447	146	-		-	-	13.793 /lf	593
	2550	C.I.P. concrete forms, wall, job built, plywood, over 8' to 16' high, 4 use, includes erecting, bracing, stripping and cleaning	1,700.00	sfca	11,853	1,683	-		-	-	7.962 /sfca	13,536
	5200	Chamfer strip, wood, 3/4" wide	85.00	lf	76	12	-		-	-	1.033 /lf	88
	1400	Tie cones, plastic, for coil tie system, for CIP wall forms, 1/2" bolt diameter x 1" setback length, includes material only	2.00	c	-	130	-		-	-	65.00 /c	130
n	3010	Waterstop, rubber, center bulb, 1/4" thick x 6" wide_WALLS	77.00	lf	249	578	-		-	-	10.733 /lf	826
	0100	Splice rebar, standard, self-aligning type, taper threaded, #4 bars, includes holding rebar in place while splicing	35.20	ea	302	451	-		-	-	21.373 /ea	752
n	2020	Reinforcing steel, unload and sort, add to base_WALLS	3.20	ton	115	-	-		67	-	56.816 /ton	182
n	2214	Reinforcing steel, crane cost for handling, average, add_WALLS	3.20	ton	125	-	-		73	-	61.756 /ton	198
	0700	Reinforcing steel, in place, walls, #3 to #7, A615, grade 60, incl labor for accessories, excl material for accessories	3.20	ton	2,203	4,640	-		-	-	2,138.534 /ton	6,843
	5100	Structural concrete, placing, walls, pumped, 12" thick, includes leveling (strike off) & consolidation, excludes material	3.20	cy	94	-	-		14	-	33.98 /cy	109
	5100	Structural concrete, placing, walls, pumped, 12" thick, includes leveling (strike off) & consolidation, excludes material	32.00	cy	944	-	-		144	-	33.983 /cy	1,087
n	0525	Struct WALLS concrete,ready mix,normal wt,4500 psi,includes local aggregate,sand,portland cement and water,delivered, includes all additives	3.20	cy	-	736	-		-	-	230.00 /cy	736
n	0525	Struct WALLS concrete,ready mix,normal wt,4500 psi,includes local aggregate,sand,portland cement and water,delivered, includes all additives	32.00	CY	-	7,360	-		-	-	230.00 /CY	7,360
n	0210	Control joint, clean out control joint of debris_WALLS	43.00	lf	3	-	-			-	0.073 /lf	3
n	0366	Control joint, joint sealant, polyurethane, 1/4" x 1/4" (308 LF/Gal)_WALLS	43.00	lf	70	7	-		-	-	1.790 /lf	77
	0020	Concrete finishing, walls, includes breaking ties and patching voids	1,700.00	sf	1,385	68	-		-	-	0.855 /sf	1,453
	0050	Concrete finishing, walls, burlap rub with grout, includes breaking ties and patching voids	850.00	sf	831	34	-		-	-	1.018 /sf	865
		03 11 13.804 12" CIP Wall			*18,697*	*15,844*			*297*		*1,088.707/CY*	*34,839*

32.00 CY

325.823 Labor hours
8.214 Equipment hours

AACE Classification Accuracy Range

Upper Range +50% **Lower Range -30%**

Central Kitsap Treatment Plant Solids Handling

Kitsap County

Detail Report - Direct Costs

Item		Description	Takeoff Qty		Labor Amount	Material Amount	Subcontract Amount	Subcontract Name	Equipment Amount	Other Amount	Total Unit Cost	Total Amount
		03 11 13.804.15 Concrete Wall, 25' High x 34 LF			*18,697*	*15,844*	*0*		*297*	*0*	*1,088.707/CY*	*34,839*
		32.00 CY										
		325.823 Labor hours										
		8.214 Equipment hours										
03 11 13.815.05		*Grade Wall, 2' High x 92 LF*										
03 11 13.815		*24" CIP Wall*										
	0500	C.I.P. concrete forms, wall, wood bulkhead with 2 piece keyway, 1 use, includes erecting, bracing, stripping and cleaning	10.00	lf	104	34	-		-	-	13.792 /lf	138
	2550	C.I.P. concrete forms, wall, job built, plywood, over 8' to 16' high, 4 use, includes erecting, bracing, stripping and cleaning	368.00	sfca	2,566	364	-		-	-	7.962 /sfca	2,930
	5200	Chamfer strip, wood, 3/4" wide	19.00	lf	17	3	-		-	-	1.033 /lf	20
	1400	Tie cones, plastic, for coil tie system, for CIP wall forms, 1/2" bolt diameter x 1" setback length, includes material only	1.00	c	-	65	-		-	-	65.00 /c	65
n	3010	Waterstop, rubber, center bulb, 1/4" thick x 6" wide_WALLS	102.00	lf	330	765	-		-	-	10.733 /lf	1,095
	0100	Splice rebar, standard, self-aligning type, taper threaded, #4 bars, includes holding rebar in place while splicing	7.70	ea	66	99	-		-	-	21.373 /ea	165
n	2020	Reinforcing steel, unload and sort, add to base_WALLS	0.70	ton	25	-	-		15	-	56.81 /ton	40
n	2214	Reinforcing steel, crane cost for handling, average, add_WALLS	0.70	ton	27	-	-		16	-	61.76 /ton	43
	0700	Reinforcing steel, in place, walls, #3 to #7, A615, grade 60, incl labor for accessories, excl material for accessories	0.70	ton	482	1,015	-		-	-	2,138.530 /ton	1,497
	5100	Structural concrete, placing, walls, pumped, 12" thick, includes leveling (strike off) & consolidation, excludes material	0.70	cy	21	-	-		3	-	33.99 /cy	24
	5100	Structural concrete, placing, walls, pumped, 12" thick, includes leveling (strike off) & consolidation, excludes material	7.00	cy	206	-	-		31	-	33.983 /cy	238
n	0525	Struct WALLS concrete,ready mix,normal wt,4500 psi,includes local aggregate,sand,portland cement and water,delivered, includes all additives	0.70	cy	-	161	-		-	-	230.00 /cy	161
n	0525	Struct WALLS concrete,ready mix,normal wt,4500 psi,includes local aggregate,sand,portland cement and water,delivered, includes all additives	7.00	CY	-	1,610	-		-	-	230.00 /CY	1,610
n	0210	Control joint, clean out control joint of debris_WALLS	10.00	lf	1	-	-			-	0.073 /lf	1
n	0366	Control joint, joint sealant, polyurethane, 1/4" x 1/4" (308 LF/Gal)_WALLS	10.00	lf	16	2	-		-	-	1.79 /lf	18
	0020	Concrete finishing, walls, includes breaking ties and patching voids	368.00	sf	300	15	-		-	-	0.855 /sf	315

Central Kitsap Treatment Plant Solids Handling

Kitsap County

Detail Report - Direct Costs

Item		Description	Takeoff Qty		Labor Amount	Material Amount	Subcontract Amount	Subcontract Name	Equipment Amount	Other Amount	Total Unit Cost	Total Amount
03 11 13.815		*24" CIP Wall*										
	0050	Concrete finishing, walls, burlap rub with grout, includes breaking ties and patching voids	184.00	sf	180	7	-		-	-	1.018 /sf	187
		03 11 13.815 24" CIP Wall			*4,341*	*4,139*			*65*		*1,220.723/CY*	*8,545*
		7.00 CY										
		75.541 Labor hours										
		1.797 Equipment hours										
		03 11 13.815.05 Grade Wall, 2' High x 92 LF			*4,341*	*4,139*	*0*		*65*	*0*	*1,220.723/CY*	*8,545*
		7.00 CY										
		75.541 Labor hours										
		1.797 Equipment hours										
03 41 33.000.20		*Double Tee Roof x 1,258 SF*										
03 41 33.000		*Precast and Prestressed Concrete*										
	0300	Precast tees, double, floor, 30' span, prestressed	1,257.979	SF	1,212	17,926	-		633	-	15.717 /SF	19,771
		03 41 33.000 Precast and Prestressed Concrete			*1,212*	*17,926*			*633*		*15.717/SF*	*19,771*
		1,257.979 SF										
		18.870 Labor hours										
		2.097 Equipment hours										
		03 41 33.000.20 Double Tee Roof x 1,258 SF			*1,212*	*17,926*	*0*		*633*	*0*	*15.717/SF*	*19,771*
		1,257.979 SF										
		18.870 Labor hours										
		2.097 Equipment hours										
		DIVISION 03 CONCRETE			**122,336**	**149,921**	**0**		**5,396**	**0**	**964.074/CY**	**277,653**
		288.00 CY										
		2,124.713 Labor hours										
		125.254 Equipment hours										
DIVISION 05		**METALS**										
05 50 00.315.10		*Stairs*										
05 50 00.315		*Metal Stairs - Aluminum*										
	0050	Stair, shop fabricated, steel, 4'-0" W, incl pipe railing, stringers, grating treads w/ safety nosing, per riser	3.00	RISR	210	1,545	-		16	-	590.053 /RISR	1,770
	0132	Floor grating, aluminum, 1-1/2" x 3/16" bearing bars @ 1-3/16" O.C., cross bars @ 4" O.C., up to 300 S.F., field fabricated from panels	24.00	sf	72	1,104	-		5	-	49.217 /sf	1,181

Central Kitsap Treatment Plant Solids Handling

Kitsap County

Detail Report - Direct Costs

Item	Description	Takeoff Qty		Labor Amount	Material Amount	Subcontract Amount	Subcontract Name	Equipment Amount	Other Amount	Total Unit Cost	Total Amount
	05 50 00.315 Metal Stairs - Aluminum			*281*	*2,649*			*21*		*983.787/RISR*	*2,951*
	3.00 RISR										
	4.297 Labor hours										
	1.074 Equipment hours										
	05 50 00.315.10 Stairs			*281*	*2,649*	*0*		*21*	*0*	*983.787/RISR*	*2,951*
	3.00 RISR										
	4.297 Labor hours										
	1.074 Equipment hours										
05 52 02.002.10	*Hand Railing, 40 LF*										
05 52 02.002	*Aluminum Railings - 3 Rail*										
0210	Railing, pipe, aluminum, clear finish, 3 rails, 3'-6" high, posts @ 5' O.C., 1-1/2" dia, shop fabricated	40.00	LF	612	3,720	-		46	-	109.435 /LF	4,377
	05 52 02.002 Aluminum Railings - 3 Rail			*612*	*3,720*			*46*		*109.435/LF*	*4,377*
	40.00 LF										
	9.343 Labor hours										
	2.336 Equipment hours										
	05 52 02.002.10 Hand Railing, 40 LF			*612*	*3,720*	*0*		*46*	*0*	*109.435/LF*	*4,377*
	40.00 LF										
	9.343 Labor hours										
	2.336 Equipment hours										
	DIVISION 05 METALS			**893**	**6,369**	**0**		**67**	**0**	**7,328.76 /LS**	**7,329**
	1.00 LS										
	13.640 Labor hours										
	3.410 Equipment hours										
DIVISION 07	**THERMAL, MOISTURE PROTECTION**										
07 51 00.000.20	*Built Up Roofing System PVC x 1,258 SF*										
07 51 00.000	*Built-Up Roofing System (BUR)*										
0800	Aluminum coping, stock units, for 12" wall, excludes scaffolding	163.00	lf	2,292	508	-		-	-	17.18 /lf	2,800
2780	2" x 8" miscellaneous wood blocking, to steel construction, per M.B.F.	0.163	mbf	491	237	-		-	-	4,465.100 /mbf	728
2780	2" x 8" miscellaneous wood blocking, to steel construction, per M.B.F.	0.653	mbf	1,968	948	-		-	-	4,464.99 /mbf	2,916
2700	Elastomeric sheet waterproofing, polyvinyl chloride sheets, plain, 30 mils thick	1,258.00	SF	2,515	391	-		-	-	2.310 /SF	2,906

Central Kitsap Treatment Plant Solids Handling

Kitsap County

Detail Report - Direct Costs

Item		Description	Takeoff Qty		Labor Amount	Material Amount	Subcontract Amount	Subcontract Name	Equipment Amount	Other Amount	Total Unit Cost	Total Amount
07 51 00.000		*Built-Up Roofing System (BUR)*										
	1725	Polyisocyanurate insulation, for roof decks, 2" thick, 2#/CF density, fastening excluded	1,258.00	sf	491	1,270	-		-	-	1.400 /sf	1,761
	1745	Polyisocyanurate insulation, for roof decks, 3" thick, 2#/CF density, fastening excluded	1,258.00	sf	541	1,900	-		-	-	1.940 /sf	2,440
	0825	Asphalt shingles, #30 felt underlayment	13.00	sq	125	153	-		-	-	21.39 /sq	278
	0100	Sheet metal flashing, aluminum, flexible, mill finish, .032" thick, including up to 4 bends	284.00	sf	1,095	1,625	-		-	-	9.580 /sf	2,721
		07 51 00.000 Built-Up Roofing System (BUR)			*9,519*	*7,032*					*13.156/SF*	*16,550*
		1,258.00 SF										
		178.016 Labor hours										
		07 51 00.000.20 Built Up Roofing System PVC x 1,258 SF			*9,519*	*7,032*	*0*		*0*	*0*	*13.156/SF*	*16,550*
		1,258.00 SF										
		178.016 Labor hours										
07 72 33.000.05		*Roof Hatch, 4' x 4'*										
07 72 33.000		*Roof Hatches*										
n	1120	Roof Hatches, with curb, 1" fiberglass insulation, galvanized steel curb and aluminum cover, 4' x 4'	2.00	EA	470	3,600	-		-	-	2,034.80 /EA	4,070
		07 72 33.000 Roof Hatches			*470*	*3,600*					*2,034.80 /EA*	*4,070*
		2.00 EA										
		8.00 Labor hours										
		07 72 33.000.05 Roof Hatch, 4' x 4'			*470*	*3,600*	*0*		*0*	*0*	*2,034.80 /EA*	*4,070*
		2.00 EA										
		8.00 Labor hours										
		DIVISION 07 THERMAL, MOISTURE PROTECTION			**9,988**	**10,632**	**0**		**0**	**0**	**16.391/SF**	**20,620**
		1,258.00 SF										
		186.016 Labor hours										
DIVISION 08			**OPENINGS**									
08 11 00.030.15		*(FOG BLDG) - Exterior Door, 3' x 7'*										
08 11 00.030		*Metal Doors & Frames (3070)*										
	1000	Frames, steel, knock down, hollow metal, single, 16 ga., up to 4-7/8" deep, 3'-0" x 7'-0"	2.00	EA	117	390	-		-	-	253.60 /EA	507

Central Kitsap Treatment Plant Solids Handling

Kitsap County

Detail Report - Direct Costs

Item		Description	Takeoff Qty		Labor Amount	Material Amount	Subcontract Amount	Subcontract Name	Equipment Amount	Other Amount	Total Unit Cost	Total Amount
08 11 00.030		*Metal Doors & Frames (3070)*										
	5050	Doors, aluminum, commercial entrance, flush panel doors, single, 3'-0" x 7'-0", incl. hinges, push/pull, deadlock, cylinder, threshold, excl. glazing	2.00	ea	826	1,720	-		-	-	1,273.120 /ea	2,546
	3000	Door hardware, panic device, narrow stile, mortise bar, exit only	2.00	ea	234	1,200	-		-	-	717.20 /ea	1,434
	0011	Thresholds, aluminum, 3' long door saddles	6.00	lf	59	72	-		-	-	21.817 /lf	131
	1430	Door hardware, hinges, full mortise, high frequency, brass base, US10, 4-1/2" x 4-1/2"	3.00	pr	-	182	-		-	-	60.50 /pr	182
	1200	Paints & coatings, exterior, door & frame, one side, flush, 1 coat, 3' x 7'	2.00	ea	47	5	-		-	-	25.655 /ea	51
		08 11 00.030 Metal Doors & Frames (3070)			*1,283*	*3,568*					*2,425.775/EA*	*4,852*
		2.00 EA										
		20.741 Labor hours										
		08 11 00.030.15 (FOG BLDG) - Exterior Door, 3' x 7'			*1,283*	*3,568*	*0*		*0*	*0*	*2,425.775/EA*	*4,852*
		2.00 EA										
		20.741 Labor hours										
08 11 00.060.15		*(FOG BLDG) - Interior Door, 6' x 7'*										
08 11 00.060		*Metal Doors & Frames (6070)*										
	3620	Frames, steel, knock down, hollow metal, 14 gauge, up to 5-3/4" D, 7'-0" H, 6'-0" W, double	3.00	EA	234	705	-		-	-	313.133 /EA	939
	5100	Doors, aluminum, commercial entrance, flush panel doors, pair of, 3'-0" x 7'-0", incl. hinges, push/pull, deadlock, cylinder, threshold, excl. glazing	3.00	pr	1,549	4,875	-		-	-	2,141.40 /pr	6,424
	3000	Door hardware, panic device, narrow stile, mortise bar, exit only	6.00	ea	703	3,600	-		-	-	717.20 /ea	4,303
	0011	Thresholds, aluminum, 3' long door saddles	18.00	lf	176	217	-		-	-	21.817 /lf	393
	1430	Door hardware, hinges, full mortise, high frequency, brass base, US10, 4-1/2" x 4-1/2"	9.00	pr	-	545	-		-	-	60.50 /pr	545
	1200	Paints & coatings, exterior, door & frame, one side, flush, 1 coat, 3' x 7'	6.00	ea	140	14	-		-	-	25.655 /ea	154
		08 11 00.060 Metal Doors & Frames (6070)			*2,803*	*9,955*					*4,252.643/EA*	*12,758*
		3.00 EA										
		45.824 Labor hours										
		08 11 00.060.15 (FOG BLDG) - Interior Door, 6' x 7'			*2,803*	*9,955*	*0*		*0*	*0*	*4,252.643/EA*	*12,758*
		3.00 EA										
		45.824 Labor hours										
08 36 13.000.05		*(FOG BLDG) - Overhead Rollup Door, 8' x 8'*										
08 36 13.000		*Overhead Door - Sectional Aluminum*										

Central Kitsap Treatment Plant Solids Handling

Kitsap County

Detail Report - Direct Costs

Item		Description	Takeoff Qty		Labor Amount	Material Amount	Subcontract Amount	Subcontract Name	Equipment Amount	Other Amount	Total Unit Cost	Total Amount
08 36 13.000		*Overhead Door - Sectional Aluminum*										
	0050	Doors, rolling service, steel, manual, 20 gauge, 8' x 8' high, incl. hardware	1.00	EA	646	1,225	-		-	-	1,870.50 /EA	1,871
	3300	Doors, rolling service, steel, manual, for enamel finish, add	64.00	sf	-	141	-		-	-	2.20 /sf	141
	3700	Doors, rolling service, steel, manual, for safety edge bottom bar, electric, add	8.00	lf	-	360	-		-	-	45.00 /lf	360
	4000	Doors, rolling service, steel, manual, for weatherstripping, extruded rubber, jambs, add	24.00	lf	-	377	-		-	-	15.70 /lf	377
	4500	Doors, rolling service, steel, manual, motor operators for, to 14' x 14' opening	1.00	ea	207	1,200	-		-	-	1,406.56 /ea	1,407
		08 36 13.000 Overhead Door - Sectional Aluminum			*852*	*3,303*					*4,154.66 /EA*	*4,155*
		1.00 EA										
		13.20 Labor hours										
		08 36 13.000.05 (FOG BLDG) - Overhead Rollup Door, 8' x 8'			*852*	*3,303*	*0*		*0*	*0*	*4,154.66 /EA*	*4,155*
		1.00 EA										
		13.20 Labor hours										
08 36 13.000.10		*Overhead Door, 10' x 10'*										
08 36 13.000		*Overhead Door - Sectional Aluminum*										
	0100	Doors, rolling service, steel, manual, 20 gauge, 10' x 10' high, incl. hardware	1.00	EA	738	2,000	-		-	-	2,737.71 /EA	2,738
	3300	Doors, rolling service, steel, manual, for enamel finish, add	100.00	sf	-	220	-		-	-	2.20 /sf	220
	3700	Doors, rolling service, steel, manual, for safety edge bottom bar, electric, add	10.00	lf	-	450	-		-	-	45.00 /lf	450
	4000	Doors, rolling service, steel, manual, for weatherstripping, extruded rubber, jambs, add	30.00	lf	-	471	-		-	-	15.70 /lf	471
	4500	Doors, rolling service, steel, manual, motor operators for, to 14' x 14' opening	1.00	ea	207	1,200	-		-	-	1,406.56 /ea	1,407
	4700	Doors, rolling service, steel, manual, for fire door, additional fusible link, add	1.00	ea	-	31	-		-	-	31.00 /ea	31
		08 36 13.000 Overhead Door - Sectional Aluminum			*944*	*4,372*					*5,316.27 /EA*	*5,316*
		1.00 EA										
		14.629 Labor hours										
		08 36 13.000.10 Overhead Door, 10' x 10'			*944*	*4,372*	*0*		*0*	*0*	*5,316.27 /EA*	*5,316*
		1.00 EA										
		14.629 Labor hours										
		DIVISION 08 OPENINGS			**5,882**	**21,198**	**0**		**0**	**0**	**3,868.63 /EA**	**27,080**
		7.00 EA										

AACE Classification Accuracy Range

Upper Range +50% **Lower Range -30%**

Central Kitsap Treatment Plant Solids Handling

Kitsap County

Detail Report - Direct Costs

Item		Description	Takeoff Qty		Labor Amount	Material Amount	Subcontract Amount	Subcontract Name	Equipment Amount	Other Amount	Total Unit Cost	Total Amount
		DIVISION 08 OPENINGS			**5,882**	**21,198**	**0**		**0**	**0**	**3,868.63 /EA**	**27,080**
		7.00 EA										
		94.393 Labor hours										
DIVISION 31		**EARTHWORK**										
31.23.10.P005		*Excavation, Backfill, and Haul Off-Site*										
31 23 10.000		*Excavation, Backfill, and Haul Off-Site*										
n	6260	Strt excvt for minor strtr,bank measr,for sprd and mat ftngs,elvtr pits,and small bldng fndtn,sandy clay loam,2 cy bucket,machin excvtn,hydrlc backhoe	690.00	CY	2,902	-	-		3,233	-	8.891 /CY	6,135
	4010	Backfill, structural, sandy clay & loam, 200 H.P. dozer, 50' haul, from existing stockpile, excludes compaction	465.00	CY	132	-	-		306	-	0.942 /CY	438
	4060	Borrow, common earth, 1-1/2 C.Y. bucket, loading and/or spreading, front end loader, wheel-mounted	465.00	CY	332	3,720	-		216	-	9.179 /CY	4,268
n	0560	Hauling,excavated borrow material,loose cubic yards,20 mile round trip,0.4 load/hr,base wide rate,12 cy truck,highway haulers,excludes loading	275.00	CY	3,128	-	-		4,298	-	27.002 /CY	7,426
	0400	Compaction, structural, select fill, 8" lifts, sheepsfoot or wobbly wheel roller	465.00	CY	215	-	-		445	-	1.418 /CY	660
		31 23 10.000 Excavation, Backfill, and Haul Off-Site			*6,710*	*3,720*			*8,497*		*8.020/CY*	*18,926*
		2,360.00 CY										
		119.286 Labor hours										
		89.809 Equipment hours										
		31.23.10.P005 Excavation, Backfill, and Haul Off-Site			*6,710*	*3,720*	*0*		*8,497*	*0*	*8.020/CY*	*18,926*
		2,360.00 CY										
		119.286 Labor hours										
		89.809 Equipment hours										
31.23.19.P020		*Well Point Detwatering - 4 Months*										
31 23 19.020		*Dewatering - Wellpoint*										
n	1300	Wellpoints,complete installation,2"wellpoints,5'oc, 500'long header,8"diameter,includes one month operation,equipment rental,fuel and removal system	240.00	hdr	43,132	12,960	-		-	-	233.718 /hdr	56,092
	1400	Wellpoints, each additional month, 2" wellpoints, 5' O.C., 500' long header, 8" diameter, includes operation, equipment rental, and fuel	720.00	hdr	65,781	27,720	-		-	-	129.863 /hdr	93,501

Central Kitsap Treatment Plant Solids Handling

Kitsap County

Detail Report - Direct Costs

Item	Description	Takeoff Qty		Labor Amount	Material Amount	Subcontract Amount	Subcontract Name	Equipment Amount	Other Amount	Total Unit Cost	Total Amount
	31 23 19.020 Dewatering - Wellpoint			*108,914*	*40,680*					*37,398.405/MO*	*149,594*
	4.00 MO										
	1,824.349 Labor hours										
	31.23.19.P020 Well Point Detwatering - 4 Months			*108,914*	*40,680*	*0*		*0*	*0*	*37,398.405/MO*	*149,594*
	4.00 MO										
	1,824.349 Labor hours										
	DIVISION 31 EARTHWORK			**115,623**	**44,400**	**0**		**8,497**	**0**	**71.407/CY**	**168,520**
	2,360.00 CY										
	1,943.635 Labor hours										
	89.809 Equipment hours										
DIVISION 46		**WATER AND WASTEWATER EQUIPMENT**									
43.23.57.050	*FOG Feed Pumps*										
43 23 57.000	*Progressive Cavity Pumps*										
n 0010	Progressive cavity feed pumps pump 60 gpm	4.00	EA	23,216	100,000	-		8,320		32,884.00 /EA	131,536
	43 23 57.000 Progressive Cavity Pumps			*23,216*	*100,000*			*8,320*		*32,884.00 /EA*	*131,536*
	4.00 EA										
	320.00 Labor hours										
	64.00 Equipment hours										
	43.23.57.050 FOG Feed Pumps			*23,216*	*100,000*	*0*		*8,320*	*0*	*32,884.00 /EA*	*131,536*
	4.00 EA										
	320.00 Labor hours										
	64.00 Equipment hours										
43.23.58.015	*Fog Transfer pumps*										
43 23 58.000	*Rotary Lobe Pumps*										
1000	Rotary Lobe pumps 660 gpm	2.00	EA	5,291	50,000	-		804	-	28,047.71 /EA	56,095
	43 23 58.000 Rotary Lobe Pumps			*5,291*	*50,000*			*804*		*28,047.71 /EA*	*56,095*
	2.00 EA										
	96.00 Labor hours										
	16.00 Equipment hours										
	43.23.58.015 Fog Transfer pumps			*5,291*	*50,000*	*0*		*804*	*0*	*28,047.71 /EA*	*56,095*
	2.00 EA										
	96.00 Labor hours										
	16.00 Equipment hours										

Central Kitsap Treatment Plant Solids Handling

Kitsap County

Detail Report - Direct Costs

Item	Description	Takeoff Qty		Labor Amount	Material Amount	Subcontract Amount	Subcontract Name	Equipment Amount	Other Amount	Total Unit Cost	Total Amount
44.51.00.004	*Truck Connection and Control*										
44 51 00.000	*Waste Collection, Transfer, and Hauling Equipment*										
2510	Truck Loading connection w/ control panel	1.00	EA	3,085	35,000	-		1,104	-	39,189.300 /EA	39,189
2510	Actuated pinch valve - manuf equipment w/ truck loadout	1.00	EA	1,414	15,000	-		506	-	16,920.09 /EA	16,920
	44 51 00.000 Waste Collection, Transfer, and Hauling Equipment			*4,499*	*50,000*			*1,610*		*28,054.695/EA*	*56,109*
	2.00 EA										
	70.00 Labor hours										
	70.00 Equipment hours										
	44.51.00.004 Truck Connection and Control			*4,499*	*50,000*	*0*		*1,610*	*0*	*28,054.695/EA*	*56,109*
	2.00 EA										
	70.00 Labor hours										
	70.00 Equipment hours										
44.51.00.008	*Screening Bin*										
44 51 04.000	*Packaged FOG Treatment*										
2510	Collection Bin	1.00	EA	257	6,000	-		92	-	6,349.11 /EA	6,349
	44 51 04.000 Packaged FOG Treatment			*257*	*6,000*			*92*			*6,349*
	4.00 Labor hours										
	4.00 Equipment hours										
	44.51.00.008 Screening Bin			*257*	*6,000*	*0*		*92*	*0*	*6,349.11 /EA*	*6,349*
	1.00 EA										
	4.00 Labor hours										
	4.00 Equipment hours										
44.51.04.005	*Fog Screening System*										
44 51 04.000	*Packaged FOG Treatment*										
1000	Packaged FOG screening & grit unit, SAVI Beast	1.00	EA	7,055	375,000	-		4,096	3,500	389,650.59 /EA	389,651
	44 51 04.000 Packaged FOG Treatment			*7,055*	*375,000*			*4,096*	*3,500*		*389,651*
	128.00 Labor hours										
	128.00 Equipment hours										
	44.51.04.005 Fog Screening System			*7,055*	*375,000*	*0*		*4,096*	*3,500*	*389,650.59 /EA*	*389,651*
	1.00 EA										
	128.00 Labor hours										
	128.00 Equipment hours										

Central Kitsap Treatment Plant Solids Handling

Kitsap County

Detail Report - Direct Costs

Item	Description	Takeoff Qty	Labor Amount	Material Amount	Subcontract Amount	Subcontract Name	Equipment Amount	Other Amount	Total Unit Cost	Total Amount
	DIVISION 46 WATER AND WASTEWATER EQUIPMENT		**40,318**	**581,000**	**0**		**14,922**	**3,500**	**63,974.051/EA**	**639,741**
	10.00 EA									
	618.00 Labor hours									
	282.00 Equipment hours									
	819 FOG RECEIVING BUILDING		***295,041***	***813,520***	***0***		***28,882***	***3,500***	***1,140,942.53 /LS***	***1,140,943***
	1.00 LS									
	4,980.397 Labor hours									
	500.473 Equipment hours									

821 SEPTAGE HANDLING FACILITY

DIVISION 03 CONCRETE

03 11 13.504.30 Foundation Slab, 12" Thick x 120 SF

03 11 13.504 12" Slab on Grade

	3050	C.I.P. concrete forms, slab on grade, edge, wood, 7" to 12" high, 4 use, includes erecting, bracing, stripping and cleaning	43.816	sfca	180	53	-	-	-	5.322 /sfca	233
n	9015	C.I.P. concrete forms, bulkhead for slab on grade w/ keyway, up to 12", exp metal, includes erecting, bracing, stripping and cleaning	6.00	sfca	15	3	-	-	-	2.893 /sfca	17
n	2050	Reinforcing steel, unload and sort, add to base_SLAB ON GRADE	0.438	ton	16	-	-	9	-	56.83 /ton	25
	0600	Reinforcing steel, in place, slab on grade, #3 to #7, A615, grade 60, incl labor for accessories, excl material for accessories	0.438	ton	393	635	-	-	-	2,348.08 /ton	1,028
	2220	Reinforcing steel, crane cost for handling, 90 picks/day, up to 0.5 Ton/day	0.438	ton	45	-	-	26	-	162.330 /ton	71
	4650	Structural concrete, placing, slab on grade, pumped, over 6" thick, includes leveling (strike off) & consolidation, excludes material	0.50	cy	9	-	-	1	-	20.20 /cy	10
	4650	Structural concrete, placing, slab on grade, pumped, over 6" thick, includes leveling (strike off) & consolidation, excludes material	5.00	cy	88	-	-	13	-	20.206 /cy	101
n	0725	Struct SLAB ON GRADE concrete,ready mix,normal wt,4500 psi,includes local aggregate,sand,portland cement and water,delivered, includes all additives	0.50	cy	-	115	-	-	-	230.00 /cy	115

Central Kitsap Treatment Plant Solids Handling

Kitsap County

Detail Report - Direct Costs

	Item	Description	Takeoff Qty		Labor Amount	Material Amount	Subcontract Amount	Subcontract Name	Equipment Amount	Other Amount	Total Unit Cost	Total Amount
03 11 13.504		*12" Slab on Grade*										
n	0725	Struct SLAB ON GRADE concrete,ready mix,normal wt,4500 psi,includes local aggregate,sand,portland cement and water,delivered, includes all additives	5.00	CY	-	1,150	-		-	-	230.00 /CY	1,150
n	0255	Concrete finishing, floors, manual screed, bull float, machine float & steel trowel (walk-behind)_SOG	119.99	sf	88	-	-		6	-	0.787 /sf	94
n	0122	Control joint, concrete floor slab, sawcut in green concrete, 1" depth_SOG	6.00	lf	3	0	-		0	-	0.53 /lf	3
n	0215	Control joint, clean out control joint of debris_SOG	6.00	lf	0	-	-			-	0.073 /lf	0
n	0367	Control joint, joint sealant, polyurethane, 1/4" x 1/4" (308 LF/Gal)_SOG	11.999	lf	20	2	-		-	-	1.789 /lf	21
n	0310	Concrete surface treatment, curing, sprayed membrane compound_SOG	1.20	csf	10	9	-		-	-	15.408 /csf	18
	1200	Vapor retarders, building paper, polyethylene vapor barrier, standard, 10 mil (.010" thick)	1.20	sq	15	10	-		-	-	20.817 /sq	25
n	1310	Fill, gravel fill, compacted, under floor slabs, alternate pricing method, 12" deep_SOG	5.00	ecy	55	160	-		6	-	44.144 /ecy	221
n	1136	Hauling, excavated borrow material, loose cubic yards, 20 mile round trip, 0.4 loads/hour, 16.5 c.y. dump trailer, highway haulers, excludes loading	5.00	lcy	41	-	-		62	-	20.624 /lcy	103
		03 11 13.504 12" Slab on Grade			*976*	*2,137*			*125*		*647.60 /CY*	*3,238*
		5.00 CY										
		16.812 Labor hours										
		3.095 Equipment hours										
		03 11 13.504.30 Foundation Slab, 12" Thick x 120 SF			*976*	*2,137*	*0*		*125*	*0*	*647.60 /CY*	*3,238*
		5.00 CY										
		16.812 Labor hours										
		3.095 Equipment hours										
03 11 13.801.10		*Concrete Wall, 8' High x 8" Thick x 10 LF*										
03 11 13.801		*08" CIP Wall*										
	0500	C.I.P. concrete forms, wall, wood bulkhead with 2 piece keyway, 1 use, includes erecting, bracing, stripping and cleaning	4.00	lf	42	14	-		-	-	13.793 /lf	55
	2550	C.I.P. concrete forms, wall, job built, plywood, over 8' to 16' high, 4 use, includes erecting, bracing, stripping and cleaning	160.00	sfca	1,116	158	-		-	-	7.962 /sfca	1,274
	5200	Chamfer strip, wood, 3/4" wide	8.00	lf	7	1	-		-	-	1.033 /lf	8
	1400	Tie cones, plastic, for coil tie system, for CIP wall forms, 1/2" bolt diameter x 1" setback length, includes material only	1.00	c	-	65	-		-	-	65.00 /c	65
n	3010	Waterstop, rubber, center bulb, 1/4" thick x 6" wide_WALLS	14.00	lf	45	105	-		-	-	10.733 /lf	150

Central Kitsap Treatment Plant Solids Handling

Kitsap County

Detail Report - Direct Costs

	Item	Description	Takeoff Qty		Labor Amount	Material Amount	Subcontract Amount	Subcontract Name	Equipment Amount	Other Amount	Total Unit Cost	Total Amount
03 11 13.801		*08" CIP Wall*										
	0100	Splice rebar, standard, self-aligning type, taper threaded, #4 bars, includes holding rebar in place while splicing	2.20	ea	19	28	-		-	-	21.373 /ea	47
n	2020	Reinforcing steel, unload and sort, add to base_WALLS	0.20	ton	7	-	-		4	-	56.80 /ton	11
n	2214	Reinforcing steel, crane cost for handling, average, add_WALLS	0.20	ton	8	-	-		5	-	61.75 /ton	12
	0700	Reinforcing steel, in place, walls, #3 to #7, A615, grade 60, incl labor for accessories, excl material for accessories	0.20	ton	138	290	-		-	-	2,138.550 /ton	428
	5100	Structural concrete, placing, walls, pumped, 12" thick, includes leveling (strike off) & consolidation, excludes material	0.20	cy	6	-	-		1	-	34.00 /cy	7
	5100	Structural concrete, placing, walls, pumped, 12" thick, includes leveling (strike off) & consolidation, excludes material	2.00	cy	59	-	-		9	-	33.985 /cy	68
n	0525	Struct WALLS concrete,ready mix,normal wt,4500 psi,includes local aggregate,sand,portland cement and water,delivered, includes all additives	0.20	cy	-	46	-		-	-	230.00 /cy	46
n	0525	Struct WALLS concrete,ready mix,normal wt,4500 psi,includes local aggregate,sand,portland cement and water,delivered, includes all additives	2.00	CY	-	460	-		-	-	230.00 /CY	460
n	0210	Control joint, clean out control joint of debris_WALLS	4.00	lf	0	-	-			-	0.073 /lf	0
n	0366	Control joint, joint sealant, polyurethane, 1/4" x 1/4" (308 LF/Gal)_WALLS	4.00	lf	7	1	-		-	-	1.79 /lf	7
	0020	Concrete finishing, walls, includes breaking ties and patching voids	160.00	sf	130	6	-		-	-	0.855 /sf	137
	0050	Concrete finishing, walls, burlap rub with grout, includes breaking ties and patching voids	80.00	sf	78	3	-		-	-	1.018 /sf	81
		03 11 13.801 08" CIP Wall			*1,661*	*1,178*			*19*		*1,428.74 /CY*	*2,857*
		2.00 CY										
		28.996 Labor hours										
		0.513 Equipment hours										
		03 11 13.801.10 Concrete Wall, 8' High x 8" Thick x 10 LF			*1,661*	*1,178*	*0*		*19*	*0*	*1,428.74 /CY*	*2,857*
		2.00 CY										
		28.996 Labor hours										
		0.513 Equipment hours										
03 11 13.804.50		*Concrete Wall, 8' High x 12" Thick x 44 LF*										
03 11 13.804		*12" CIP Wall*										
	0500	C.I.P. concrete forms, wall, wood bulkhead with 2 piece keyway, 1 use, includes erecting, bracing, stripping and cleaning	18.00	lf	187	61	-		-	-	13.792 /lf	248

AACE Classification Accuracy Range

Upper Range +50% **Lower Range -30%**

Central Kitsap Treatment Plant Solids Handling

Kitsap County

Detail Report - Direct Costs

	Item	Description	Takeoff Qty		Labor Amount	Material Amount	Subcontract Amount	Subcontract Name	Equipment Amount	Other Amount	Total Unit Cost	Total Amount
03 11 13.804		*12" CIP Wall*										
	2550	C.I.P. concrete forms, wall, job built, plywood, over 8' to 16' high, 4 use, includes erecting, bracing, stripping and cleaning	704.00	sfca	4,908	697	-		-	-	7.962 /sfca	5,605
	5200	Chamfer strip, wood, 3/4" wide	36.00	lf	32	5	-		-	-	1.033 /lf	37
	1400	Tie cones, plastic, for coil tie system, for CIP wall forms, 1/2" bolt diameter x 1" setback length, includes material only	1.00	c	-	65	-		-	-	65.00 /c	65
n	3010	Waterstop, rubber, center bulb, 1/4" thick x 6" wide_WALLS	62.00	lf	200	465	-		-	-	10.733 /lf	665
	0100	Splice rebar, standard, self-aligning type, taper threaded, #4 bars, includes holding rebar in place while splicing	15.40	ea	132	197	-		-	-	21.373 /ea	329
n	2020	Reinforcing steel, unload and sort, add to base_WALLS	1.40	ton	50	-	-		29	-	56.814 /ton	80
n	2214	Reinforcing steel, crane cost for handling, average, add_WALLS	1.40	ton	55	-	-		32	-	61.76 /ton	86
	0700	Reinforcing steel, in place, walls, #3 to #7, A615, grade 60, incl labor for accessories, excl material for accessories	1.40	ton	964	2,030	-		-	-	2,138.536 /ton	2,994
	5100	Structural concrete, placing, walls, pumped, 12" thick, includes leveling (strike off) & consolidation, excludes material	1.40	cy	41	-	-		6	-	33.98 /cy	48
	5100	Structural concrete, placing, walls, pumped, 12" thick, includes leveling (strike off) & consolidation, excludes material	14.00	cy	413	-	-		63	-	33.983 /cy	476
n	0525	Struct WALLS concrete,ready mix,normal wt,4500 psi,includes local aggregate,sand,portland cement and water,delivered, includes all additives	1.40	cy	-	322	-		-	-	230.00 /cy	322
n	0525	Struct WALLS concrete,ready mix,normal wt,4500 psi,includes local aggregate,sand,portland cement and water,delivered, includes all additives	14.00	CY	-	3,220	-		-	-	230.00 /CY	3,220
n	0210	Control joint, clean out control joint of debris_WALLS	18.00	lf	1	-	-			-	0.073 /lf	1
n	0366	Control joint, joint sealant, polyurethane, 1/4" x 1/4" (308 LF/Gal)_WALLS	18.00	lf	29	3	-		-	-	1.789 /lf	32
	0020	Concrete finishing, walls, includes breaking ties and patching voids	704.00	sf	574	28	-		-	-	0.855 /sf	602
	0050	Concrete finishing, walls, burlap rub with grout, includes breaking ties and patching voids	352.00	sf	344	14	-		-	-	1.018 /sf	358
		03 11 13.804 12" CIP Wall			*7,932*	*7,107*			*130*		*1,083.518/CY*	*15,169*
		14.00 CY										
		138.147 Labor hours										
		3.594 Equipment hours										
		03 11 13.804.50 Concrete Wall, 8' High x 12" Thick x 44 LF			*7,932*	*7,107*	*0*		*130*	*0*	*1,083.518/CY*	*15,169*
		14.00 CY										
		138.147 Labor hours										
		3.594 Equipment hours										

AACE Classification Accuracy Range

Upper Range +50% **Lower Range -30%**

Central Kitsap Treatment Plant Solids Handling

Kitsap County

Detail Report - Direct Costs

	Item	Description	Takeoff Qty		Labor Amount	Material Amount	Subcontract Amount	Subcontract Name	Equipment Amount	Other Amount	Total Unit Cost	Total Amount
03 11 13.804.55		*Concrete Wall, 15' High x 12" Thick x 205 LF*										
03 11 13.804		*12" CIP Wall*										
	0500	C.I.P. concrete forms, wall, wood bulkhead with 2 piece keyway, 1 use, includes erecting, bracing, stripping and cleaning	154.00	lf	1,600	524	-		-	-	13.792 /lf	2,124
	2550	C.I.P. concrete forms, wall, job built, plywood, over 8' to 16' high, 4 use, includes erecting, bracing, stripping and cleaning	6,150.00	sfca	42,879	6,089	-		-	-	7.962 /sfca	48,967
	5200	Chamfer strip, wood, 3/4" wide	308.00	lf	275	43	-		-	-	1.033 /lf	318
	1400	Tie cones, plastic, for coil tie system, for CIP wall forms, 1/2" bolt diameter x 1" setback length, includes material only	6.00	c	-	390	-		-	-	65.00 /c	390
n	3010	Waterstop, rubber, center bulb, 1/4" thick x 6" wide_WALLS	359.00	lf	1,161	2,693	-		-	-	10.733 /lf	3,853
	0100	Splice rebar, standard, self-aligning type, taper threaded, #4 bars, includes holding rebar in place while splicing	125.40	ea	1,075	1,605	-		-	-	21.373 /ea	2,680
n	2020	Reinforcing steel, unload and sort, add to base_WALLS	11.40	ton	410	-	-		238	-	56.816 /ton	648
n	2214	Reinforcing steel, crane cost for handling, average, add_WALLS	11.40	ton	446	-	-		258	-	61.757 /ton	704
	0700	Reinforcing steel, in place, walls, #3 to #7, A615, grade 60, incl labor for accessories, excl material for accessories	11.40	ton	7,849	16,530	-		-	-	2,138.533 /ton	24,379
	5100	Structural concrete, placing, walls, pumped, 12" thick, includes leveling (strike off) & consolidation, excludes material	11.40	cy	336	-	-		51	-	33.983 /cy	387
	5100	Structural concrete, placing, walls, pumped, 12" thick, includes leveling (strike off) & consolidation, excludes material	114.00	cy	3,362	-	-		512	-	33.983 /cy	3,874
n	0525	Struct WALLS concrete,ready mix,normal wt,4500 psi,includes local aggregate,sand,portland cement and water,delivered, includes all additives	11.40	cy	-	2,622	-		-	-	230.00 /cy	2,622
n	0525	Struct WALLS concrete,ready mix,normal wt,4500 psi,includes local aggregate,sand,portland cement and water,delivered, includes all additives	114.00	CY	-	26,220	-		-	-	230.00 /CY	26,220
n	0210	Control joint, clean out control joint of debris_WALLS	154.00	lf	11	-	-			-	0.073 /lf	11
n	0366	Control joint, joint sealant, polyurethane, 1/4" x 1/4" (308 LF/Gal)_WALLS	154.00	lf	251	25	-		-	-	1.790 /lf	276
	0020	Concrete finishing, walls, includes breaking ties and patching voids	6,150.00	sf	5,011	246	-		-	-	0.855 /sf	5,257
	0050	Concrete finishing, walls, burlap rub with grout, includes breaking ties and patching voids	3,075.00	sf	3,007	123	-		-	-	1.018 /sf	3,130
		03 11 13.804 12" CIP Wall			*67,673*	*57,108*			*1,059*		*1,103.867/CY*	*125,841*

114.00 CY

1,179.284 Labor hours
29.263 Equipment hours

AACE Classification Accuracy Range

Upper Range +50% **Lower Range -30%**

Central Kitsap Treatment Plant Solids Handling

Kitsap County

Detail Report - Direct Costs

Item	Description	Takeoff Qty		Labor Amount	Material Amount	Subcontract Amount	Name	Equipment Amount	Other Amount	Total Unit Cost	Total Amount
	03 11 13.804.55 Concrete Wall, 15' High x 12" Thick x 205 LF			*67,673*	*57,108*	*0*		*1,059*	*0*	*1,103.867/CY*	*125,841*
	114.00 CY										
	1,179.284 Labor hours										
	29.263 Equipment hours										
03 41 33.000.30	*Double Tee Roof x 1,515 SF*										
03 41 33.000	*Precast and Prestressed Concrete*										
0300	Precast tees, double, floor, 30' span, prestressed	5,257.99	SF	5,067	74,926	-		2,644	-	15.717 /SF	82,638
	03 41 33.000 Precast and Prestressed Concrete			*5,067*	*74,926*			*2,644*		*15.717/SF*	*82,638*
	5,257.99 SF										
	78.870 Labor hours										
	8.763 Equipment hours										
	03 41 33.000.30 Double Tee Roof x 1,515 SF			*5,067*	*74,926*	*0*		*2,644*	*0*	*15.717/SF*	*82,638*
	5,257.99 SF										
	78.870 Labor hours										
	8.763 Equipment hours										
03.11.20.005	*Retaining wall - Btwn infl box & Septage Screen*										
03 11 20.200	*CIP Retaining Wall - SF*										
0500	C.I.P. concrete forms, wall, wood bulkhead with 2 piece keyway, 1 use, includes erecting, bracing, stripping and cleaning	21.00	lf	218	71	-		-	-	13.792 /lf	290
2550	C.I.P. concrete forms, wall, job built, plywood, over 8' to 16' high, 4 use, includes erecting, bracing, stripping and cleaning	1,040.00	sfca	7,251	4,160	-		-	-	10.972 /sfca	11,411
5200	Chamfer strip, wood, 3/4" wide	42.00	lf	38	6	-		-	-	1.033 /lf	43
1400	Tie cones, plastic, for coil tie system, for CIP wall forms, 1/2" bolt diameter x 1" setback length, includes material only	1.00	c	-	65	-		-	-	65.00 /c	65
0100	Splice rebar, standard, self-aligning type, taper threaded, #4 bars, includes holding rebar in place while splicing	26.40	ea	226	338	-		-	-	21.373 /ea	564
n 2020	Reinforcing steel, unload and sort, add to base_WALLS	2.76	ton	99	-	-		58	-	56.815 /ton	157
n 2214	Reinforcing steel, crane cost for handling, average, add_WALLS	2.76	ton	108	-	-		63	-	61.757 /ton	170
0700	Reinforcing steel, in place, walls, #3 to #7, A615, grade 60, incl labor for accessories, excl material for accessories	2.76	ton	1,900	4,002	-		-	-	2,138.533 /ton	5,902
5100	Structural concrete, placing, walls, pumped, 12" thick, includes leveling (strike off) & consolidation, excludes material	24.00	cy	708	-	-		108	-	33.983 /cy	816

Central Kitsap Treatment Plant Solids Handling

Kitsap County

Detail Report - Direct Costs

	Item	Description	Takeoff Qty		Labor Amount	Material Amount	Subcontract Amount	Subcontract Name	Equipment Amount	Other Amount	Total Unit Cost	Total Amount
03 11 20.200		*CIP Retaining Wall - SF*										
	5100	Structural concrete, placing, walls, pumped, 12" thick, includes leveling (strike off) & consolidation, excludes material	2.40	cy	71	-	-		11	-	33.983 /cy	82
	5100	Structural concrete, placing, footing pumped, 12" thick, includes leveling (strike off) & consolidation, excludes material	20.00	cy	590	-	-		90	-	33.983 /cy	680
n	0525	Struct WALLS concrete,ready mix,normal wt,4500 psi,includes local aggregate,sand,portland cement and water,delivered, includes all additives	24.00	CY	-	5,520	-		-	-	230.00 /CY	5,520
n	0525	Struct WALLS concrete,ready mix,normal wt,4500 psi,includes local aggregate,sand,portland cement and water,delivered, includes all additives	2.40	CY	-	552	-		-	-	230.00 /CY	552
n	0525	Struct Footing concrete,ready mix,normal wt,4500 psi,includes local aggregate,sand,portland cement and water,delivered, includes all additives	20.00	CY	-	4,600	-		-	-	230.00 /CY	4,600
n	0210	Control joint, clean out control joint of debris_WALLS	21.00	lf	2	-	-			-	0.073 /lf	2
n	0366	Control joint, joint sealant, polyurethane, 1/4" x 1/4" (308 LF/Gal)_WALLS	21.00	lf	34	3	-		-	-	1.790 /lf	38
	0020	Concrete finishing, walls, includes breaking ties and patching voids	840.00	sf	684	34	-		-	-	0.855 /sf	718
	0050	Concrete finishing, walls, burlap rub with grout, includes breaking ties and patching voids	420.00	sf	411	17	-		-	-	1.018 /sf	427
n	6035	Strt excvt for minor strtr,bank measr,for sprd and mat ftngs,elvtr pits,and small bldng fndtns,common earth,3/4 cy bucket,machin excvtn,hydrlc backhoe	150.00	bcy	1,514	-	-		1,231	-	18.300 /bcy	2,745
		03 11 20.200 CIP Retaining Wall - SF			*13,854*	*19,368*			*1,559*			*34,781*
		242.160 Labor hours 23.918 Equipment hours										
		03.11.20.005 Retaining wall - Btwn infl box & Septage Screen			*13,854*	*19,368*	*0*		*1,559*	*0*	*749.597/CY*	*34,781*
		46.40 CY										
		242.160 Labor hours 23.918 Equipment hours										
		DIVISION 03 CONCRETE			**97,164**	**161,825**	**0**		**5,536**	**0**	**1,458.241/CY**	**264,525**
		181.40 CY										
		1,684.269 Labor hours 69.147 Equipment hours										

DIVISION 07 THERMAL, MOISTURE PROTECTION

07 51 00.000.30 *SEPTAGE EQU - Built Up Roofing System PVC x 1,515 SF*

AACE Classification Accuracy Range

Upper Range +50% **Lower Range -30%**

Central Kitsap Treatment Plant Solids Handling

Kitsap County

Detail Report - Direct Costs

Item		Description	Takeoff Qty		Labor Amount	Material Amount	Subcontract Amount	Name	Equipment Amount	Other Amount	Total Unit Cost	Total Amount
07 51 00.000		*Built-Up Roofing System (BUR)*										
	0800	Aluminum coping, stock units, for 12" wall, excludes scaffolding	179.00	lf	2,517	558	-		-	-	17.18 /lf	3,075
	2780	2" x 8" miscellaneous wood blocking, to steel construction, per M.B.F.	0.179	mbf	539	260	-		-	-	4,465.100 /mbf	799
	2780	2" x 8" miscellaneous wood blocking, to steel construction, per M.B.F.	0.716	mbf	2,158	1,039	-		-	-	4,464.986 /mbf	3,197
	2700	Elastomeric sheet waterproofing, polyvinyl chloride sheets, plain, 30 mils thick	1,515.00	SF	3,029	471	-		-	-	2.310 /SF	3,500
	1725	Polyisocyanurate insulation, for roof decks, 2" thick, 2#/CF density, fastening excluded	1,515.00	sf	591	1,530	-		-	-	1.400 /sf	2,121
	1745	Polyisocyanurate insulation, for roof decks, 3" thick, 2#/CF density, fastening excluded	1,515.00	sf	651	2,288	-		-	-	1.940 /sf	2,939
	0825	Asphalt shingles, #30 felt underlayment	15.00	sq	145	176	-		-	-	21.39 /sq	321
	0100	Sheet metal flashing, aluminum, flexible, mill finish, .032" thick, including up to 4 bends	311.00	sf	1,200	1,780	-		-	-	9.58 /sf	2,979
		07 51 00.000 Built-Up Roofing System (BUR)			*10,830*	*8,102*					*12.496/SF*	*18,931*
		1,515.00 SF										
		202.772 Labor hours										
		07 51 00.000.30 SEPTAGE EQU - Built Up Roofing System PVC x 1,515 SF			*10,830*	*8,102*	*0*		*0*	*0*	*12.496/SF*	*18,931*
		1,515.00 SF										
		202.772 Labor hours										
07 72 33.000.10		*Roof Hatch, 4' x 4'*										
07 72 33.000		*Roof Hatches*										
n	1120	Roof Hatches, with curb, 1" fiberglass insulation, galvanized steel curb and aluminum cover, 4' x 4'	6.00	EA	1,409	10,800	-		-	-	2,034.80 /EA	12,209
		07 72 33.000 Roof Hatches			*1,409*	*10,800*					*2,034.80 /EA*	*12,209*
		6.00 EA										
		24.00 Labor hours										
		07 72 33.000.10 Roof Hatch, 4' x 4'			*1,409*	*10,800*	*0*		*0*	*0*	*2,034.80 /EA*	*12,209*
		6.00 EA										
		24.00 Labor hours										
		DIVISION 07 THERMAL, MOISTURE PROTECTION			**12,239**	**18,902**	**0**		**0**	**0**	**20.555/SF**	**31,140**
		1,515.00 SF										
		226.772 Labor hours										

AACE Classification Accuracy Range

Upper Range +50% **Lower Range -30%**

Central Kitsap Treatment Plant Solids Handling

Kitsap County

Detail Report - Direct Costs

Item		Description	Takeoff Qty		Labor Amount	Material Amount	Subcontract Amount	Subcontract Name	Equipment Amount	Other Amount	Total Unit Cost	Total Amount
DIVISION 08		**OPENINGS**										
08.31.00.P005		*Septage Handling Facility - Access Doors - 3' x 3'*										
08 31 00.005		*Access Door - Single Leaf - 3' x 3'*										
	0050	Doors, specialty, access, floor, industrial, steel, 300 psf L.L., single leaf, 3' x 3', 300 lb	6.00	EA	1,127	8,400	-		-	-	1,587.782 /EA	9,527
		08 31 00.005 Access Door - Single Leaf - 3' x 3'			*1,127*	*8,400*					*1,587.782/EA*	*9,527*
		6.00 EA										
		17.455 Labor hours										
		08.31.00.P005 Septage Handling Facility - Access Doors - 3' x 3'			*1,127*	*8,400*	*0*		*0*	*0*	*1,587.782/EA*	*9,527*
		6.00 EA										
		17.455 Labor hours										
		DIVISION 08 OPENINGS			**1,127**	**8,400**	**0**		**0**	**0**	**1,587.782/EA**	**9,527**
		6.00 EA										
		17.455 Labor hours										
DIVISION 31		**EARTHWORK**										
31.23.10.P005		*Excavation, Backfill, and Haul Off-Site*										
31 23 10.000		*Excavation, Backfill, and Haul Off-Site*										
n	6260	Strt excvt for minor strtr,bank measr,for sprd and mat ftngs,elvtr pits,and small bldng fndtn,sandy clay loam,2 cy bucket,machin excvtn,hydrlc backhoe	2,555.00	CY	10,745	-	-		11,971	-	8.891 /CY	22,716
	4010	Backfill, structural, sandy clay & loam, 200 H.P. dozer, 50' haul, from existing stockpile, excludes compaction	1,550.00	CY	441	-	-		1,019	-	0.942 /CY	1,460
	4060	Borrow, common earth, 1-1/2 C.Y. bucket, loading and/or spreading, front end loader, wheel-mounted	1,550.00	CY	1,108	12,400	-		720	-	9.179 /CY	14,228
n	0560	Hauling,excavated borrow material,loose cubic yards,20 mile round trip,0.4 load/hr,base wide rate,12 cy truck,highway haulers,excludes loading	1,260.00	CY	14,332	-	-		19,691	-	27.002 /CY	34,023
	0400	Compaction, structural, select fill, 8" lifts, sheepsfoot or wobbly wheel roller	1,550.00	CY	717	-	-		1,482	-	1.418 /CY	2,198
		31 23 10.000 Excavation, Backfill, and Haul Off-Site			*27,343*	*12,400*			*34,883*		*8.816/CY*	*74,625*
		8,465.00 CY										
		486.937 Labor hours										
		379.236 Equipment hours										

AACE Classification Accuracy Range

Upper Range +50% **Lower Range -30%**

Central Kitsap Treatment Plant Solids Handling

Kitsap County

Detail Report - Direct Costs

Item		Description	Takeoff Qty		Labor Amount	Material Amount	Subcontract Amount	Name	Equipment Amount	Other Amount	Total Unit Cost	Total Amount
		31.23.10.P005 Excavation, Backfill, and Haul Off-Site			*27,343*	*12,400*	*0*		*34,883*	*0*	*8.816/CY*	*74,625*
		8,465.00 CY										
		486.937 Labor hours										
		379.236 Equipment hours										
31.23.19.P015		*Well Point Detwatering - 4 Months*										
31 23 19.020		*Dewatering - Wellpoint*										
n	1300	Wellpoints,complete installation,2"wellpoints,5'oc, 500'long header,8"diameter,includes one month operation,equipment rental,fuel and removal system	300.00	hdr	53,915	16,200	-		-	-	233.718 /hdr	70,115
	1400	Wellpoints, each additional month, 2" wellpoints, 5' O.C., 500' long header, 8" diameter, includes operation, equipment rental, and fuel	900.00	hdr	82,227	34,650	-		-	-	129.863 /hdr	116,877
		31 23 19.020 Dewatering - Wellpoint			*136,142*	*50,850*					*46,748.003/MO*	*186,992*
		4.00 MO										
		2,280.436 Labor hours										
		31.23.19.P015 Well Point Detwatering - 4 Months			*136,142*	*50,850*	*0*		*0*	*0*	*46,748.003/MO*	*186,992*
		4.00 MO										
		2,280.436 Labor hours										
		DIVISION 31 EARTHWORK			**163,485**	**63,250**	**0**		**34,883**	**0**	**30.906/CY**	**261,618**
		8,465.00 CY										
		2,767.373 Labor hours										
		379.236 Equipment hours										
DIVISION 33		**UTILITIES (BURIED PIPE AND VALVES)**										
33.05.15.005		*Equalization Valve Vault*										
33 05 15.030		*Precast Utility Vault*										
	0100	Utility structures, utility vaults precast concrete, excludes excavation and backfill	1.00	EA	1,452	4,500	-		1,043	-	6,994.80 /EA	6,995
		33 05 15.030 Precast Utility Vault			*1,452*	*4,500*			*1,043*		*6,994.80 /EA*	*6,995*
		1.00 EA										
		28.00 Labor hours										
		4.00 Equipment hours										

Central Kitsap Treatment Plant Solids Handling

Kitsap County

Detail Report - Direct Costs

Item	Description	Takeoff Qty		Labor Amount	Material Amount	Subcontract Amount	Subcontract Name	Equipment Amount	Other Amount	Total Unit Cost	Total Amount
	33.05.15.005 Equalization Valve Vault			*1,452*	*4,500*	*0*		*1,043*	*0*	*6,994.80 /EA*	*6,995*
	1.00 EA										
	28.00 Labor hours										
	4.00 Equipment hours										
	DIVISION 33 UTILITIES (BURIED PIPE AND VALVES)			**1,452**	**4,500**	**0**		**1,043**	**0**		**6,995**
	28.00 Labor hours										
	4.00 Equipment hours										
DIVISION 40	**PROCESS INTEGRATION (EXPOSED PIPE, VALVES AND GATES)**										
40.05.58.005	*EQ Tank Effluent Gate*										
40 05 58.030	*Slide Gates*										
150	Slide gates, steel,self cntnd, MO,incl anchr bolts&grout	2.00	EA	3,691	19,660	-		1,826	-	12,588.355 /EA	25,177
	40 05 58.030 Slide Gates			*3,691*	*19,660*			*1,826*		*12,588.355/EA*	*25,177*
	2.00 EA										
	56.00 Labor hours										
	12.00 Equipment hours										
	40.05.58.005 EQ Tank Effluent Gate			*3,691*	*19,660*	*0*		*1,826*	*0*	*12,588.355/EA*	*25,177*
	2.00 EA										
	56.00 Labor hours										
	12.00 Equipment hours										
	DIVISION 40 PROCESS INTEGRATION (EXPOSED PIPE, VALVES AND GATES)			**3,691**	**19,660**	**0**		**1,826**	**0**		**25,177**
	56.00 Labor hours										
	12.00 Equipment hours										
DIVISION 46	**WATER AND WASTEWATER EQUIPMENT**										
43.23.57.010	*Septage Equalization Pumps*										
43 23 57.000	*Progressive Cavity Pumps*										
n 0010	Progressive cavity transfer pump	2.00	EA	11,608	70,000	-		4,160	0	42,884.00 /EA	85,768
	43 23 57.000 Progressive Cavity Pumps			*11,608*	*70,000*			*4,160*		*42,884.00 /EA*	*85,768*
	2.00 EA										
	160.00 Labor hours										
	32.00 Equipment hours										

Central Kitsap Treatment Plant Solids Handling

Kitsap County

Detail Report - Direct Costs

Item	Description	Takeoff Qty		Labor Amount	Material Amount	Subcontract Amount	Subcontract Name	Equipment Amount	Other Amount	Total Unit Cost	Total Amount
	43.23.57.010 Septage Equalization Pumps			*11,608*	*70,000*	*0*		*4,160*	*0*	*42,884.00 /EA*	*85,768*
	2.00 EA										
	160.00 Labor hours										
	32.00 Equipment hours										
44.51.00.002	*Septic Influent box w/ barscreen*										
44 51 00.000	*Waste Collection, Transfer, and Hauling Equipment*										
2510	Influet box - fabricated for septage influent	3.00	EA	11,184	78,000	-		8,700	-	32,628.067 /EA	97,884
0100	Mechanically Cleaned Filter Screen, 20mgd, 6mm nominal opening, Channel width 4'x 7.5' Deep, Discharg 4'	3.00	ea	1,323	144,300	-		172	-	48,598.377 /ea	145,795
	44 51 00.000 Waste Collection, Transfer, and Hauling Equipment			*12,507*	*222,300*			*8,872*		*81,226.443/EA*	*243,679*
	3.00 EA										
	198.00 Labor hours										
	177.429 Equipment hours										
	44.51.00.002 Septic Influent box w/ barscreen			*12,507*	*222,300*	*0*		*8,872*	*0*	*81,226.443/EA*	*243,679*
	3.00 EA										
	198.00 Labor hours										
	177.429 Equipment hours										
44.51.00.004	*Truck Connection and Control*										
44 51 00.000	*Waste Collection, Transfer, and Hauling Equipment*										
2510	Truck Loading connection w/ control panel	2.00	EA	6,171	70,000	-		2,208	-	39,189.295 /EA	78,379
	44 51 00.000 Waste Collection, Transfer, and Hauling Equipment			*6,171*	*70,000*			*2,208*		*39,189.295/EA*	*78,379*
	2.00 EA										
	96.00 Labor hours										
	96.00 Equipment hours										
	44.51.00.004 Truck Connection and Control			*6,171*	*70,000*	*0*		*2,208*	*0*	*39,189.295/EA*	*78,379*
	2.00 EA										
	96.00 Labor hours										
	96.00 Equipment hours										
44.51.00.008	*Screening Bin*										
44 51 00.000	*Waste Collection, Transfer, and Hauling Equipment*										
2510	Manual Bar Screen Collection Bin	1.00	EA	257	6,000	-		92	-	6,349.11 /EA	6,349

Central Kitsap Treatment Plant Solids Handling

Kitsap County

Detail Report - Direct Costs

Item		Description	Takeoff Qty		Labor Amount	Material Amount	Subcontract Amount	Subcontract Name	Equipment Amount	Other Amount	Total Unit Cost	Total Amount
		44 51 00.000 Waste Collection, Transfer, and Hauling Equipment			*257*	*6,000*			*92*		*6,349.11 /EA*	*6,349*
		1.00 EA										
		4.00 Labor hours										
		4.00 Equipment hours										
44 51 02.000		*Packaged Septage Treatment*										
	2510	Manual Bar Screen Collection Bin	2.00	ea	514	12,000	-		184	-	6,349.11 /ea	12,698
		44 51 02.000 Packaged Septage Treatment			*514*	*12,000*			*184*			*12,698*
		8.00 Labor hours										
		8.00 Equipment hours										
		44.51.00.008 Screening Bin			*771*	*18,000*	*0*		*276*	*0*	*19,047.330/EA*	*19,047*
		1.00 EA										
		12.00 Labor hours										
		12.00 Equipment hours										
44.51.05.005		*Septage Screen & Degrit System*										
44 51 02.000		*Packaged Septage Treatment*										
	1000	Packaged septage screening & grit unit, Raptor 31CPSAG	2.00	EA	14,109	1,108,000	-		8,192	-	565,150.59 /EA	1,130,301
		44 51 02.000 Packaged Septage Treatment			*14,109*	*1,108,000*			*8,192*		*565,150.59 /EA*	*1,130,301*
		2.00 EA										
		256.00 Labor hours										
		256.00 Equipment hours										
		44.51.05.005 Septage Screen & Degrit System			*14,109*	*1,108,000*	*0*		*8,192*	*0*	*565,150.59 /EA*	*1,130,301*
		2.00 EA										
		256.00 Labor hours										
		256.00 Equipment hours										
46.41.00.005		*EQ Tank Mixers*										
46 41 00.000		*Submersible Mixers*										
	0010	Tank Mixer, submersible compact unit	2.00	EA	9,350	76,000	-			718	43,034.20 /EA	86,068
		46 41 00.000 Submersible Mixers			*9,350*	*76,000*				*718*	*43,034.20 /EA*	*86,068*
		2.00 EA										
		128.00 Labor hours										
		46.41.00.005 EQ Tank Mixers			*9,350*	*76,000*	*0*		*0*	*718*	*43,034.20 /EA*	*86,068*
		2.00 EA										
		128.00 Labor hours										

AACE Classification Accuracy Range

Upper Range +50% **Lower Range -30%**

Central Kitsap Treatment Plant Solids Handling

Kitsap County

Detail Report - Direct Costs

Item	Description	Takeoff Qty	Labor Amount	Material Amount	Subcontract Amount	Subcontract Name	Equipment Amount	Other Amount	Total Unit Cost	Total Amount
	DIVISION 46 WATER AND WASTEWATER EQUIPMENT		**54,516**	**1,564,300**	**0**		**23,708**	**718**	**136,936.902/EA**	**1,643,243**
	12.00 EA									
	850.00 Labor hours									
	573.429 Equipment hours									
	821 SEPTAGE HANDLING FACILITY		***333,673***	***1,840,836***	***0***		***66,996***	***718***	***2,242,223.58 /LS***	***2,242,224***
	1.00 LS									
	5,629.868 Labor hours									
	1,037.811 Equipment hours									

823 SEPTAGE INFLUENT BOX

DIVISION 03 — **CONCRETE**

03 09 00.885.05 — *Concrete Fill Transverse Section, 5'-5" Thick x 33 SF*

Item	Description	Takeoff Qty	Labor Amount	Material Amount	Subcontract Amount	Equipment Amount	Other Amount	Total Unit Cost	Total Amount
03 09 00.885	*Concrete_Grout/Flowable Fill*								
4350	Structural concrete, placing, slab on grade, pumped, up to 6" thick, includes leveling (strike off) & consolidation, excludes material	79.457 CY	1,983	-	-	302	-	28.755 /CY	2,285
n 4350	Strt concret,ready mix,flowabl fill,strt,1000 psi,includs ash,portlnd cement type i,aggregt,sand and water,delivrd,excluds all additvs and treatments (Flow Fill)	79.457 cy	-	6,674	-	-	-	84.00 /cy	6,674
	03 09 00.885 Concrete_Grout/Flowable Fill		*1,983*	*6,674*		*302*		*112.755/CY*	*8,959*
	79.457 CY								
	39.117 Labor hours								
	14.669 Equipment hours								
	03 09 00.885.05 Concrete Fill Transverse Section, 5'-5" Thick x 33 SF		*1,983*	*6,674*	*0*	*302*	*0*	*112.755/CY*	*8,959*
	79.457 CY								
	39.117 Labor hours								
	14.669 Equipment hours								

03 09 00.885.10 — *Concrete Fill, 2' Thick x 34 SF*

Item	Description	Takeoff Qty	Labor Amount	Material Amount	Subcontract Amount	Equipment Amount	Other Amount	Total Unit Cost	Total Amount
03 09 00.885	*Concrete_Grout/Flowable Fill*								
4350	Structural concrete, placing, slab on grade, pumped, up to 6" thick, includes leveling (strike off) & consolidation, excludes material	30.223 CY	754	-	-	115	-	28.755 /CY	869

AACE Classification Accuracy Range

Upper Range +50% **Lower Range -30%**

Central Kitsap Treatment Plant Solids Handling

Kitsap County

Detail Report - Direct Costs

Item		Description	Takeoff Qty		Labor Amount	Material Amount	Subcontract Amount	Subcontract Name	Equipment Amount	Other Amount	Total Unit Cost	Total Amount
03 09 00.885		*Concrete_Grout/Flowable Fill*										
n	4350	Strt concret,ready mix,flowabl fill,strt,1000 psi,includs ash,portlnd cement type i,aggregt,sand and water,delivrd,excluds all additvs and treatments (Flow Fill)	30.223	cy	-	2,539	-		-	-	84.00 /cy	2,539
		03 09 00.885 Concrete_Grout/Flowable Fill			*754*	*2,539*			*115*		*112.755/CY*	*3,408*
		30.223 CY										
		14.879 Labor hours										
		5.580 Equipment hours										
		03 09 00.885.10 Concrete Fill, 2' Thick x 34 SF			*754*	*2,539*	*0*		*115*	*0*	*112.755/CY*	*3,408*
		30.223 CY										
		14.879 Labor hours										
		5.580 Equipment hours										
03 11 13.504.35		*(Septage EQU) Lower Level Slab, 12" Thick x 314 SF*										
03 11 13.504		*12" Slab on Grade*										
	3050	C.I.P. concrete forms, slab on grade, edge, wood, 7" to 12" high, 4 use, includes erecting, bracing, stripping and cleaning	70.88	sfca	291	86	-		-	-	5.322 /sfca	377
n	9015	C.I.P. concrete forms, bulkhead for slab on grade w/ keyway, up to 12", exp metal, includes erecting, bracing, stripping and cleaning	15.70	sfca	38	7	-		-	-	2.894 /sfca	45
n	2050	Reinforcing steel, unload and sort, add to base_SLAB ON GRADE	1.05	ton	38	-	-		22	-	56.81 /ton	60
	0600	Reinforcing steel, in place, slab on grade, #3 to #7, A615, grade 60, incl labor for accessories, excl material for accessories	1.05	ton	943	1,523	-		-	-	2,348.09 /ton	2,465
	2220	Reinforcing steel, crane cost for handling, 90 picks/day, up to 0.5 Ton/day	1.05	ton	108	-	-		63	-	162.330 /ton	170
	4650	Structural concrete, placing, slab on grade, pumped, over 6" thick, includes leveling (strike off) & consolidation, excludes material	12.00	cy	210	-	-		32	-	20.206 /cy	242
	4650	Structural concrete, placing, slab on grade, pumped, over 6" thick, includes leveling (strike off) & consolidation, excludes material	1.20	cy	21	-	-		3	-	20.20 /cy	24
n	0725	Struct SLAB ON GRADE concrete,ready mix,normal wt,4500 psi,includes local aggregate,sand,portland cement and water,delivered, includes all additives	1.20	cy	-	276	-		-	-	230.00 /cy	276
n	0725	Struct SLAB ON GRADE concrete,ready mix,normal wt,4500 psi,includes local aggregate,sand,portland cement and water,delivered, includes all additives	12.00	CY	-	2,760	-		-	-	230.00 /CY	2,760
n	0255	Concrete finishing, floors, manual screed, bull float, machine float & steel trowel (walk-behind)_SOG	313.998	sf	230	-	-		17	-	0.787 /sf	247

Central Kitsap Treatment Plant Solids Handling

Kitsap County

Detail Report - Direct Costs

	Item	Description	Takeoff Qty		Labor Amount	Material Amount	Subcontract Amount	Subcontract Name	Equipment Amount	Other Amount	Total Unit Cost	Total Amount
03 11 13.504		*12" Slab on Grade*										
n	0122	Control joint, concrete floor slab, sawcut in green concrete, 1" depth_SOG	15.70	lf	7	0	-		1	-	0.529 /lf	8
n	0215	Control joint, clean out control joint of debris_SOG	15.70	lf	1	-	-			-	0.073 /lf	1
n	0367	Control joint, joint sealant, polyurethane, 1/4" x 1/4" (308 LF/Gal)_SOG	31.40	lf	51	5	-		-	-	1.790 /lf	56
n	0310	Concrete surface treatment, curing, sprayed membrane compound_SOG	3.14	csf	25	23	-		-	-	15.408 /csf	48
	1200	Vapor retarders, building paper, polyethylene vapor barrier, standard, 10 mil (.010" thick)	3.14	sq	40	26	-		-	-	20.82 /sq	65
n	1310	Fill, gravel fill, compacted, under floor slabs, alternate pricing method, 12" deep_SOG	13.00	ecy	142	416	-		16	-	44.143 /ecy	574
n	1136	Hauling, excavated borrow material, loose cubic yards, 20 mile round trip, 0.4 loads/hour, 16.5 c.y. dump trailer, highway haulers, excludes loading	13.00	lcy	107	-	-		161	-	20.625 /lcy	268
		03 11 13.504 12" Slab on Grade			*2,252*	*5,123*			*315*		*640.795/CY*	*7,690*
		12.00 CY										
		38.785 Labor hours										
		7.887 Equipment hours										
		03 11 13.504.35 (Septage EQU) Lower Level Slab, 12" Thick x 314 SF			*2,252*	*5,123*	*0*		*315*	*0*	*640.795/CY*	*7,690*
		12.00 CY										
		38.785 Labor hours										
		7.887 Equipment hours										
03 11 13.504.40		*(Septage EQU) Foundation Slab, 12" Thick x 1,515 SF*										
03 11 13.504		*12" Slab on Grade*										
	3050	C.I.P. concrete forms, slab on grade, edge, wood, 7" to 12" high, 4 use, includes erecting, bracing, stripping and cleaning	155.692	sfca	639	190	-		-	-	5.322 /sfca	829
n	9015	C.I.P. concrete forms, bulkhead for slab on grade w/ keyway, up to 12", exp metal, includes erecting, bracing, stripping and cleaning	75.75	sfca	185	34	-		-	-	2.894 /sfca	219
n	2050	Reinforcing steel, unload and sort, add to base_SLAB ON GRADE	4.988	ton	179	-	-		104	-	56.816 /ton	283
	0600	Reinforcing steel, in place, slab on grade, #3 to #7, A615, grade 60, incl labor for accessories, excl material for accessories	4.988	ton	4,480	7,233	-		-	-	2,348.087 /ton	11,712
	2220	Reinforcing steel, crane cost for handling, 90 picks/day, up to 0.5 Ton/day	4.988	ton	512	-	-		297	-	162.330 /ton	810
	4650	Structural concrete, placing, slab on grade, pumped, over 6" thick, includes leveling (strike off) & consolidation, excludes material	5.70	cy	100	-	-		15	-	20.205 /cy	115
	4650	Structural concrete, placing, slab on grade, pumped, over 6" thick, includes leveling (strike off) & consolidation, excludes material	57.00	cy	1,000	-	-		152	-	20.206 /cy	1,152

Central Kitsap Treatment Plant Solids Handling

Kitsap County

Detail Report - Direct Costs

	Item	Description	Takeoff Qty		Labor Amount	Material Amount	Subcontract Amount	Subcontract Name	Equipment Amount	Other Amount	Total Unit Cost	Total Amount
03 11 13.504		*12" Slab on Grade*										
n	0725	Struct SLAB ON GRADE concrete,ready mix,normal wt,4500 psi,includes local aggregate,sand,portland cement and water,delivered, includes all additives	57.00	CY	-	13,110	-		-	-	230.00 /CY	13,110
n	0725	Struct SLAB ON GRADE concrete,ready mix,normal wt,4500 psi,includes local aggregate,sand,portland cement and water,delivered, includes all additives	5.70	cy	-	1,311	-		-	-	230.00 /cy	1,311
n	0255	Concrete finishing, floors, manual screed, bull float, machine float & steel trowel (walk-behind)_SOG	1,515.00	sf	1,111	-	-		82	-	0.787 /sf	1,193
n	0122	Control joint, concrete floor slab, sawcut in green concrete, 1" depth_SOG	75.75	lf	33	2	-		4	-	0.529 /lf	40
n	0215	Control joint, clean out control joint of debris_SOG	75.75	lf	6	-	-			-	0.073 /lf	6
n	0367	Control joint, joint sealant, polyurethane, 1/4" x 1/4" (308 LF/Gal)_SOG	151.50	lf	247	24	-		-	-	1.790 /lf	271
n	0310	Concrete surface treatment, curing, sprayed membrane compound_SOG	15.15	csf	121	113	-		-	-	15.408 /csf	233
	1200	Vapor retarders, building paper, polyethylene vapor barrier, standard, 10 mil (.010" thick)	15.15	sq	192	123	-		-	-	20.820 /sq	315
n	1310	Fill, gravel fill, compacted, under floor slabs, alternate pricing method, 12" deep_SOG	65.00	ecy	709	2,080	-		80	-	44.143 /ecy	2,869
n	1136	Hauling, excavated borrow material, loose cubic yards, 20 mile round trip, 0.4 loads/hour, 16.5 c.y. dump trailer, highway haulers, excludes loading	65.00	lcy	534	-	-		807	-	20.626 /lcy	1,341
		03 11 13.504 12" Slab on Grade			*10,047*	*24,220*			*1,542*		*628.234/CY*	*35,809*
		57.00 CY										
		172.665 Labor hours										
		38.659 Equipment hours										
		03 11 13.504.40 (Septage EQU) Foundation Slab, 12" Thick x 1,515 SF			*10,047*	*24,220*	*0*		*1,542*	*0*	*628.234/CY*	*35,809*
		57.00 CY										
		172.665 Labor hours										
		38.659 Equipment hours										
03 11 13.504.45		*(Septage EQU) Elevated Slab, 12" Thick x 1,515 SF*										
03 11 13.504		*12" Slab on Grade*										
	3050	C.I.P. concrete forms, slab on grade, edge, wood, 7" to 12" high, 4 use, includes erecting, bracing, stripping and cleaning	155.692	sfca	639	190	-		-	-	5.322 /sfca	829
n	9015	C.I.P. concrete forms, bulkhead for slab on grade w/ keyway, up to 12", exp metal, includes erecting, bracing, stripping and cleaning	75.75	sfca	185	34	-		-	-	2.894 /sfca	219
n	2050	Reinforcing steel, unload and sort, add to base_SLAB ON GRADE	4.988	ton	179	-	-		104	-	56.816 /ton	283

Central Kitsap Treatment Plant Solids Handling

Kitsap County

Detail Report - Direct Costs

	Item	Description	Takeoff Qty		Labor Amount	Material Amount	Subcontract Amount	Subcontract Name	Equipment Amount	Other Amount	Total Unit Cost	Total Amount
03 11 13.504		*12" Slab on Grade*										
	0600	Reinforcing steel, in place, slab on grade, #3 to #7, A615, grade 60, incl labor for accessories, excl material for accessories	4.988	ton	4,480	7,233	-		-	-	2,348.087 /ton	11,712
	2220	Reinforcing steel, crane cost for handling, 90 picks/day, up to 0.5 Ton/day	4.988	ton	512	-	-		297	-	162.330 /ton	810
	4650	Structural concrete, placing, slab on grade, pumped, over 6" thick, includes leveling (strike off) & consolidation, excludes material	5.70	cy	100	-	-		15	-	20.205 /cy	115
	4650	Structural concrete, placing, slab on grade, pumped, over 6" thick, includes leveling (strike off) & consolidation, excludes material	57.00	cy	1,000	-	-		152	-	20.206 /cy	1,152
n	0725	Struct SLAB ON GRADE concrete,ready mix,normal wt,4500 psi,includes local aggregate,sand,portland cement and water,delivered, includes all additives	5.70	cy	-	1,311	-		-	-	230.00 /cy	1,311
n	0725	Struct SLAB ON GRADE concrete,ready mix,normal wt,4500 psi,includes local aggregate,sand,portland cement and water,delivered, includes all additives	57.00	CY	-	13,110	-		-	-	230.00 /CY	13,110
n	0255	Concrete finishing, floors, manual screed, bull float, machine float & steel trowel (walk-behind)_SOG	1,515.00	sf	1,111	-	-		82	-	0.787 /sf	1,193
n	0122	Control joint, concrete floor slab, sawcut in green concrete, 1" depth_SOG	75.75	lf	33	2	-		4	-	0.529 /lf	40
n	0215	Control joint, clean out control joint of debris_SOG	75.75	lf	6	-	-			-	0.073 /lf	6
n	0367	Control joint, joint sealant, polyurethane, 1/4" x 1/4" (308 LF/Gal)_SOG	151.50	lf	247	24	-		-	-	1.790 /lf	271
n	0310	Concrete surface treatment, curing, sprayed membrane compound_SOG	15.15	csf	121	113	-		-	-	15.408 /csf	233
	1200	Vapor retarders, building paper, polyethylene vapor barrier, standard, 10 mil (.010" thick)	15.15	sq	192	123	-		-	-	20.820 /sq	315
n	1310	Fill, gravel fill, compacted, under floor slabs, alternate pricing method, 12" deep_SOG	65.00	ecy	709	2,080	-		80	-	44.143 /ecy	2,869
n	1136	Hauling, excavated borrow material, loose cubic yards, 20 mile round trip, 0.4 loads/hour, 16.5 c.y. dump trailer, highway haulers, excludes loading	65.00	lcy	534	-	-		807	-	20.626 /lcy	1,341
		03 11 13.504 12" Slab on Grade			*10,047*	*24,220*			*1,542*		*628.234/CY*	*35,809*
		57.00 CY										
		172.665 Labor hours										
		38.659 Equipment hours										
		03 11 13.504.45 (Septage EQU) Elevated Slab, 12" Thick x 1,515 SF			*10,047*	*24,220*	*0*		*1,542*	*0*	*628.234/CY*	*35,809*
		57.00 CY										
		172.665 Labor hours										
		38.659 Equipment hours										

Central Kitsap Treatment Plant Solids Handling

Kitsap County

Detail Report - Direct Costs

Item		Description	Takeoff Qty		Labor Amount	Material Amount	Subcontract Amount	Name	Equipment Amount	Other Amount	Total Unit Cost	Total Amount
		DIVISION 03 CONCRETE			**25,083**	**62,777**	**0**		**3,815**	**0**	**388.981/CY**	**91,675**
		235.68 CY										
		438.111 Labor hours										
		105.454 Equipment hours										
DIVISION 05		**METALS**										
05 50 00.305.05		*SEPTAGE INFLUENT BOX - Metal Grating x 37 SF*										
05 50 00.305		*Metal Grating - Aluminum*										
n	0134	Floor grating, aluminum, 1-1/2" x 3/16" bearing bars @ 1-3/16" O.C., cross bars @ 4" O.C., over 300 S.F., field fabricated from panels	37.00	SF	78	1,554	-		6	-	44.252 /SF	1,637
		05 50 00.305 Metal Grating - Aluminum			*78*	*1,554*			*6*		*44.252/SF*	*1,637*
		37.00 SF										
		1.184 Labor hours										
		0.296 Equipment hours										
		05 50 00.305.05 SEPTAGE INFLUENT BOX - Metal Grating x 37 SF			*78*	*1,554*	*0*		*6*	*0*	*44.252/SF*	*1,637*
		37.00 SF										
		1.184 Labor hours										
		0.296 Equipment hours										
		DIVISION 05 METALS			**78**	**1,554**	**0**		**6**	**0**		**1,637**
		1.184 Labor hours										
		0.296 Equipment hours										
DIVISION 31		**EARTHWORK**										
31.23.10.P005		*Excavation, Backfill, and Haul Off-Site*										
31 23 10.000		*Excavation, Backfill, and Haul Off-Site*										
n	6260	Strt excvt for minor strtr,bank measr,for sprd and mat ftngs,elvtr pits,and small bldng fndtn,sandy clay loam,2 cy bucket,machin excvtn,hydrlc backhoe	185.00	CY	778	-	-		867	-	8.891 /CY	1,645
	4010	Backfill, structural, sandy clay & loam, 200 H.P. dozer, 50' haul, from existing stockpile, excludes compaction	155.00	CY	44	-	-		102	-	0.942 /CY	146
	4060	Borrow, common earth, 1-1/2 C.Y. bucket, loading and/or spreading, front end loader, wheel-mounted	155.00	CY	111	1,240	-		72	-	9.179 /CY	1,423
n	0560	Hauling,excavated borrow material,loose cubic yards,20 mile round trip,0.4 load/hr,base wide rate,12 cy truck,highway haulers,excludes loading	15.00	CY	171	-	-		234	-	27.003 /CY	405

Central Kitsap Treatment Plant Solids Handling

Kitsap County

Detail Report - Direct Costs

Item		Description	Takeoff Qty		Labor Amount	Material Amount	Subcontract Amount	Subcontract Name	Equipment Amount	Other Amount	Total Unit Cost	Total Amount
31 23 10.000		*Excavation, Backfill, and Haul Off-Site*										
	0400	Compaction, structural, select fill, 8" lifts, sheepsfoot or wobbly wheel roller	155.00	CY	72	-	-		148	-	1.418 /CY	220
		31 23 10.000 Excavation, Backfill, and Haul Off-Site			*1,175*	*1,240*			*1,423*		*5.772/CY*	*3,839*
		665.00 CY										
		20.702 Labor hours										
		12.543 Equipment hours										
		31.23.10.P005 Excavation, Backfill, and Haul Off-Site			*1,175*	*1,240*	*0*		*1,423*	*0*	*5.772/CY*	*3,839*
		665.00 CY										
		20.702 Labor hours										
		12.543 Equipment hours										
31.23.19.P010		*Well Point Detwatering - 2 Months*										
31 23 19.020		*Dewatering - Wellpoint*										
n	1000	Wellpoints,complete installation,2"wellpoints,5'oc, 200'long header,8"diameter,includes one month operation,equipment rental,fuel and removal system	100.00	hdr	31,840	14,700	-		-	-	465.40 /hdr	46,540
	1100	Wellpoints, each additional month, 2" wellpoints, 5' O.C., 200' long header, 8" diameter, includes operation, equipment rental, and fuel	100.00	hdr	22,770	6,900	-		-	-	296.700 /hdr	29,670
		31 23 19.020 Dewatering - Wellpoint			*54,610*	*21,600*					*38,104.980/MO*	*76,210*
		2.00 MO										
		914.740 Labor hours										
		31.23.19.P010 Well Point Detwatering - 2 Months			*54,610*	*21,600*	*0*		*0*	*0*	*38,104.980/MO*	*76,210*
		2.00 MO										
		914.740 Labor hours										
		DIVISION 31 EARTHWORK			**55,785**	**22,840**	**0**		**1,423**	**0**	**120.374/CY**	**80,048**
		665.00 CY										
		935.442 Labor hours										
		12.543 Equipment hours										
		823 SEPTAGE INFLUENT BOX			***80,946***	***87,171***	***0***		***5,244***	***0***	***173,360.85 /LS***	***173,361***
		1.00 LS										
		1,374.737 Labor hours										
		118.293 Equipment hours										

AACE Classification Accuracy Range

Upper Range +50% **Lower Range -30%**

Central Kitsap Treatment Plant Solids Handling

Kitsap County

Detail Report - Direct Costs

Estimate Totals

Description	Amount	Totals	Rate
Labor	6,130,943		
Labor Burden	2,452,377		40.000 %
Premium on Labor - Keep and Retain	840,028		8.000 $/hr
Material	14,580,837		
Build America, Buy America Act	2,187,126		15.000 %
Equipment	1,240,463		
Discount RS Means Equip (-25%)			
Subcontract	4,048,460		
Other	8,640		
DIVISION 02	117,970		25.000 %
DIVISION 04	170,879		25.000 %
DIVISION 05	232,379		25.000 %
DIVISION 07	83,108		25.000 %
DIVISION 08	63,077		25.000 %
DIVISION 09	96,105		25.000 %
DIVISION 13	652,014		25.000 %
DIVISION 21	20,795		25.000 %
DIVISION 22	105,200		25.000 %
DIVISION 23	157,800		25.000 %
DIVISION 31	266,975		10.000 %
DIVISION 32	32,512		10.000 %
DIVISION 33	280,439		10.000 %
DIVISION 41	4,679		25.000 %
Subtotal Direct Project Costs	**2,283,932**	**33,772,806**	
Contractor's Mob	1,350,912		4.000 %
Contractor's Home Office Overhead	1,350,912		4.000 %
Contractor's General Condition	4,052,737		12.000 %
Subtotal Field Const Costs	**6,754,561**	**40,527,367**	
Sales Tax Estimate (Mat & Eq)	1,455,560		9.200 %
Subtotal Field Const Costs	**1,455,560**	**41,982,927**	
Contractor's Fee	6,297,439		15.000 %
Subtotal Field Const Costs	**6,297,439**	**48,280,366**	
Design Contingency	14,484,110		30.000 %
Subtotal Field Const Costs	**14,484,110**	**62,764,476**	
Escalation Project (Year)	7,945,983		12.660 %
Subtotal	**7,945,983**	**70,710,459**	
Contractor's Bonds & Insurance	1,767,761		2.500 %
Construction Subtotal	**1,767,761**	**72,478,220**	
Market Volatility Adjustment Factor	1,449,564		2.000 %
Construction Total	**1,449,564**	**73,927,784**	
Special Coatings	947,792		1.000 %
Exposed Pipe	6,634,545		7.000 %
Electrical	9,477,921		10.000 %
Controls	3,791,169		4.000 %
Factored Costs	**20,851,427**	**94,779,211**	

AACE Classification Accuracy Range

Upper Range +50% **Lower Range -30%**

Project Name: Kitsap County - Hauled Wast Improvements
Facility: WWTP
Design Stage: Basis of Design Report - 15%
Date: 17-Nov-2023 **Prepared By: Pete Bredehoeft**

Escalation Adjustment - Calculation Worksheet

Escalation Rate per Year **5.00%** = Annual Escalation Rate to Apply (2)

ESCALATION ADJUSTMENT:

Target NTP for Design:	17-Nov-23	<= If design is in progress or completed, use Today's date and adjust input cells as needed		
Design Period:	15-Feb-24	3	Mo Duration (or remaining design time duration)	
Bid and Award:	9-Feb-25	12	Mo Duration	
NTP Date:	16-Feb-25	7	Day Duration for NTP (7 days as default)	
Construction Duration (calendar days):	870 Days	29	Mo Duration	112.66% Factor
Completion Date:	6-Jul-27			
Mid-Point Construction:	27-Apr-26			
Current Est Date:	17-Nov-23			
No. of Days to Mid-Point:	892			
No. of Years to Mid-Point:	2.4438			

12.66% Escalation Factor
Escalation to Apply to Opinion of Cost

NOTES:
1. Green cells are input cells. Yellow cells are default values. 30 calendar days is used to equate to 1 month.
2. Escalation percentage does not inlcude any other Market Adjustment Factors that might apply.

The Escalation Rate and Calculations are for purposes of allowing for perceived increases in labor, material and equipment for the period indicated. This is only a projection and an approximation, and does not represent what the actual adjustment will utimately be since that will vary from what is calculated above.